This is a reproduction of a library book that was digitized by Google as part of an ongoing effort to preserve the information in books and make it universally accessible.

Google books

https://books.google.com

D 101.11:
5-2815-233-14

TM 5-2815-233-14

UNIVERSITY OF VIRGINIA
ALDERMAN LIBRARY
SEP 13 1991
GOVERNMENT DOCUMENTS

TECHNICAL MANUAL

OPERATOR'S, UNIT, INTERMEDIATE
(DS) AND INTERMEDIATE (GS)
MAINTENANCE MANUAL

FOR

ENGINE, DIESEL,
CUMMINS MODEL NTA - 855 -L4
NSN 2815-01-216-0939

UNIVERSITY OF VIRGINIA LIBRARY
X004815206

(Circle C) Copyright 1983
Cummins Engine Company, Inc.
Used by Permission

HEADQUARTERS, DEPARTMENT OF THE ARMY
25 JULY 1986

Digitized by Google

Digitized by Google

TECHNICAL MANUAL

NO. 5-2815-233-14

HEADQUARTERS
DEPARTMENT OF THE ARMY
WASHINGTON, D.C., 25 July 1986

OPERATOR'S UNIT, INTERMEDIATE (DS) AND INTERMEDIATE (GS) MAINTENANCE MANUAL

ENGINE, DIESEL,
CUMMINS MODEL NTA-855-L4
NSN 2815-01-216-0939

NOTE:
This manual is printed in two parts as follows:
Part 1 consisting of Table of Contents, Operation and Maintenance instructions.
Part 2 consisting of a separate Table of Contents and Repair instructions.

REPORTING ERRORS AND RECOMMENDING IMPROVEMENTS

You can help improve this manual. If you find any mistake or if you know of a way to improve the procedures, please let us know. Mail your letter, DA Form 2028 (Recommended Changes to Publications and Blank Forms), or DA Form 2028-2 located in the back of this manual direct to: Commander, U.S. Army Troop Support Command, ATTN: AMSTR-MCTS, 4300 Goodfellow Boulevard, St. Louis, MO 63120-1798. A reply will be furnished directly to you.

Table of Contents

Digitized by Google

Digitized by Google

Part 1

OPERATION AND MAINTENANCE

Digitized by Google

Operation and Maintenance Manual

Cummins Diesel Engines

Agricultural

Construction

Industrial

Industiral Fire Pump

Logging

Mining

Railway

Generator

Copyright © 1980
Cummins Engine Company, Inc.

Bulletin 3379052-09 Printed 10/80

Digitized by Google

Foreword

This is an engine operation and maintenance manual, not a repair manual. The design of Cummins Engines makes it possible to replace worn or damaged parts with new or rebuilt parts with a minimum of down time. Contact the nearest Cummins Distributor for parts replacement as they are equipped and have well informed, trained personnel to perform this service. If your shop is properly equipped to perform either maintenance, unit replacement and/or complete engine rebuild, contact the nearest Cummins Distributors to obtain available repair manuals and arrange for training of personnel.

For model identification of an engine, check the dataplate. The letter and number code indicates breathing (naturally aspirated except when letter "T" for turbocharged is present), cubic inch displacement, application and maximum rated horsepower.

Examples:

NTA-855-370	V-903-320
N=4 valve head	V=Type engine
T=Turbocharger	903=Cubic Inch Displacement
A=Aftercooled	320=Maximum Rated horsepower
370=Maximum rated horsepower	

Cummins Engine Company, Inc.
Columbus, Indiana, U.S.A.

Digitized by Google

Digitized by Google

Operating Instructions

The engine operator must assume the responsibility of engine care while the engine is being operated. There are comparatively few rules which the operator must observe to get the best service from a Cummins Diesel.

General—All Applications

New and Rebuilt Engines Break-In

Cummins engines are run-in on dynamometers before being shipped from the factory and are ready to be put to work in applications such as emergency fire trucks, rail car applications and generator sets.

In other applications, the engine can be put to work, but the operator has an opportunity to establish conditions for optimum service life during initial 100 hours of service by:

1. Operating as much as possible at three-quarter throttle of load range.
2. Avoiding operation for long periods at engine idle speeds, or at the maximum horsepower levels in excess of five minutes.
3. Developing the habit of watching the engine instruments closely during operation and letting up on the throttle if the oil temperature reaches 200° F [121° C] or the coolant temperature exceeds 200° F [93° F].
4. Operating with a power requirement that allows acceleration to governed speed when conditions require more power.
5. Checking the oil level every 8 to 10 hours during the break-in period.

New or Rebuilt Engines Pre-Starting Instructions — First Time

Priming The Fuel System

1. Fill the fuel filter with clean No. 2 diesel fuel oil meeting the specifications outlined in Section 3.
2. Remove the fuel pump suction line and wet the gear pump gears with clean lubricating oil.
3. Check and fill the fuel tanks.
4. If the injector and valve or other adjustments have been disturbed by any maintenance work, check to be sure they have been properly adjusted before starting the engine.

Priming the Lubricating System

Note: On turbocharged engines, remove the oil inlet line from the turbocharger and prelubricate the bearing by adding 2 to 3 oz. [50 to 60 cc] of clean lubricating oil. Reconnect the oil supply line.

1. Fill the crankcase to the "L" (low) mark on the dipstick. See Lubricating Oil Specifications, Section 3.
2. Remove the plug from the lubricating oil crossover passage on NH/NT-855 Engines, Fig. 1-1. Remove the plug from the head of the lubricating oil filter housing on V Engines, Fig's. 1-2, 1-3, 1-4, 1-5 and 1-6. On KT/KTA-1150 Engines, remove the plug from the front of the oil cooler housing, Fig. 1-7.

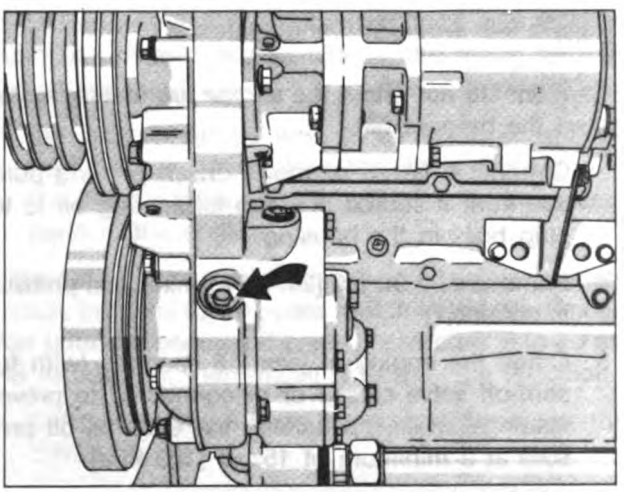

Fig. 1-1, (OM1001L). Lubricating system priming point—NT-855 C.I.D. Engine

Digitized by Google

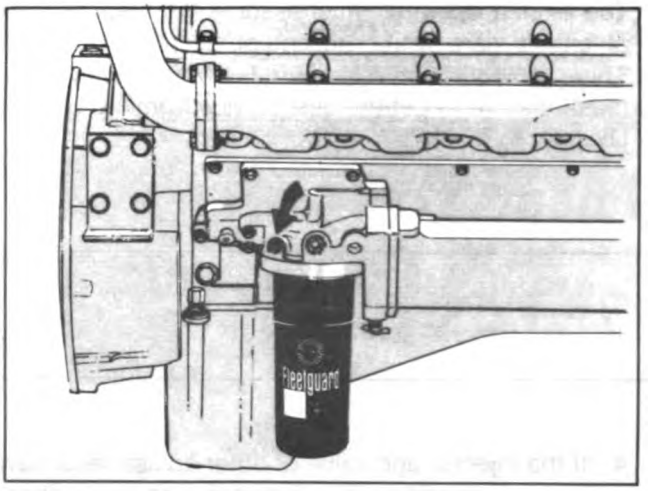

Fig. 1-2, (OM1002L). Lubricating system priming point—VT-903 C.I.D. Engine

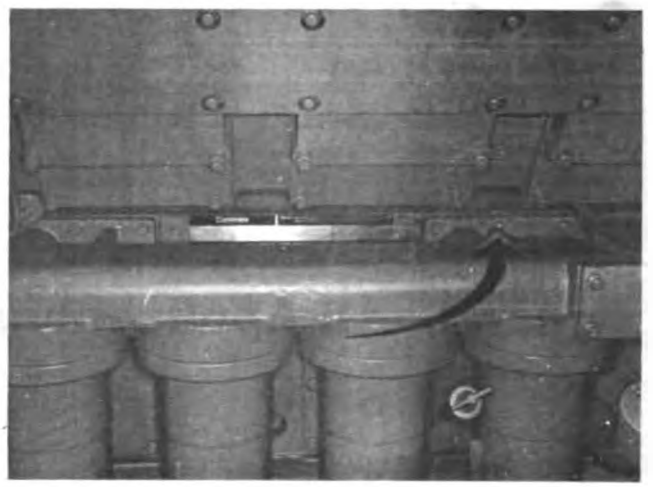

Fig. 1-4, (K21902). Lubricating system priming point — KT(A)-2300 Engine

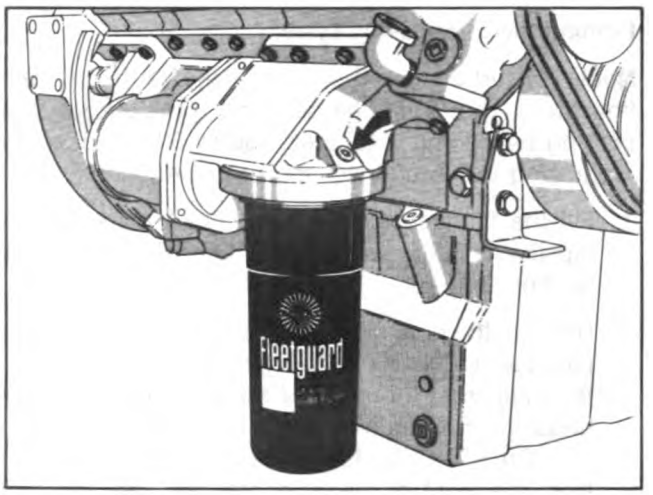

Fig. 1-3, (OM1003L). Lubricating system priming point—V/VT-555 C.I.D. Engine

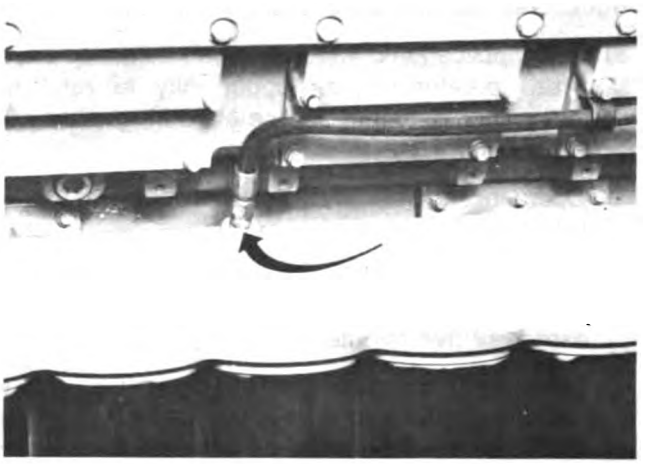

Fig. 1-5, (OM202). Lubricating system priming point — KTA-3067 Engine

Caution: Do not prime the engine lubricating system from the by-pass filter.

3. Connect a hand- or motor-driven priming pump line from a source of clean lubricating oil to the plug boss in the housing.
4. Prime until a 30 psi [207 kPa] minimum pressure is obtained.
5. Crank the engine at least 15 seconds (with fuel shut-off valve closed or disconnected to prevent starting), while maintaining the external oil pressure at a minimum of 15 psi [103 kPa].
6. Remove the external oil supply and replace the plug.

Warning: Clean the area of any lubricating oil spilled while priming or filling the crankcase.

7. Fill the crankcase to the "H" (high) mark on the dipstick with oil meeting specifications, listed in Section 3. No change in oil viscosity or type is needed for new or newly rebuilt engines.

A dipstick oil gauge is located on the side of the engine, Fig. 1-8. The dipstick has an "H" (high) (1) and "L" (low) (2) level mark to indicate lubricating oil supply. The dipstick must be kept with the oil pan, or engine, with which it was originally supplied. Cummins oil pans differ in capacity with different type installations and oil pan part numbers. Check the dipstick calibration. If in doubt, your Cummins Distributor

Digitized by Google

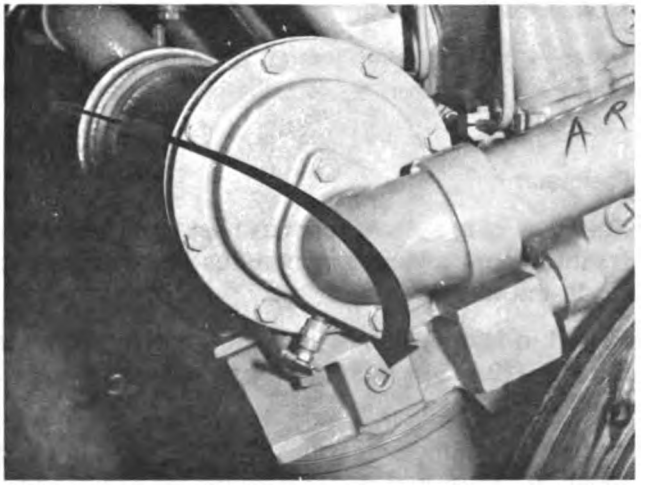

Fig. 1-6, (V41816). Lubricating system priming point — V-1710 Engine

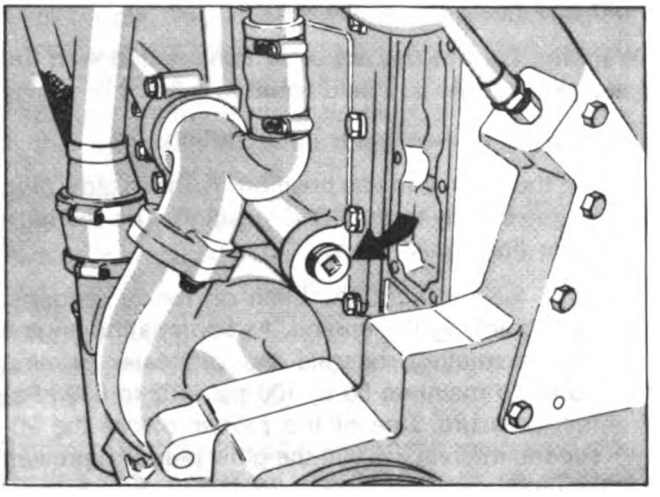

Fig. 1-7, (OM1004L). Lubricating system priming point—KT/KTA C.I.D. Engine

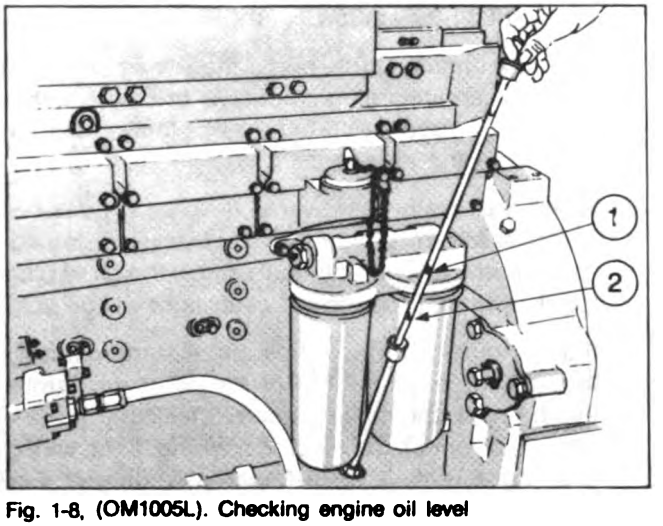

Fig. 1-8, (OM1005L). Checking engine oil level

can verify that you have the proper oil pan and dipstick calibration.

Check Hydraulic Governor

Many engines used in stationary power applications are equipped with hydraulic-governed fuel pumps which use lubricating oil as an energy medium, same weight as used in the engine. Oil level in the governor sump must be at the full mark on the dipstick.

Note: Engine applications in a cold environment should use a lighter weight oil in the governor sump.

Check Air Connections

Check the air connections to the compressor and the air equipment, as used, and to the air cleaners and air crossovers to assure that they all are secure and have no damage.

Check Engine Coolant Supply

1. Remove the radiator or heat exchanger cap and check the engine coolant supply. Add coolant as needed.
2. Make a visual check for leaks and open the water filter shut-off valves.

Starting the Engine

Starting requires that clean air and fuel be supplied to the combustion chambers in the proper quantities at the correct time.

Normal Starting Procedure

Warning: Before starting be sure that everyone is clear of the engine and equipment.

If the fuel system is equipped with an overspeed stop, push the "Reset" button before attempting to start the engine.

1. On units equipped with an air activated prelube device, open the air valve to activate the piston in the prelube device which will lubricate all moving parts in the engine.

Note: On engines equipped with an oil pressure safety switch, hold the fuel by-pass switch in the "start" position until the engine oil pressure reaches 7 to 10 psi [48 to 69 kPa]; then, move it to the "run" position.

2. Set the throttle for idle speed and disengage the driven unit.

Caution: Protect the turbocharger during start-up by not opening the throttle or accelerating above 1000

Digitized by Google

rpm until the idle speed oil pressure registers on the gauge.

3. Open the manual fuel shut-down valve, if so equipped. Fig. 1-9. Electric shut-down valves operate as the switch is turned on. A manual override knob provided on the forward end of the electric shut-down valve allows the valve to be opened in case of an electric power failure. To use, turn fully clockwise; return it to the run position after an electric repair.

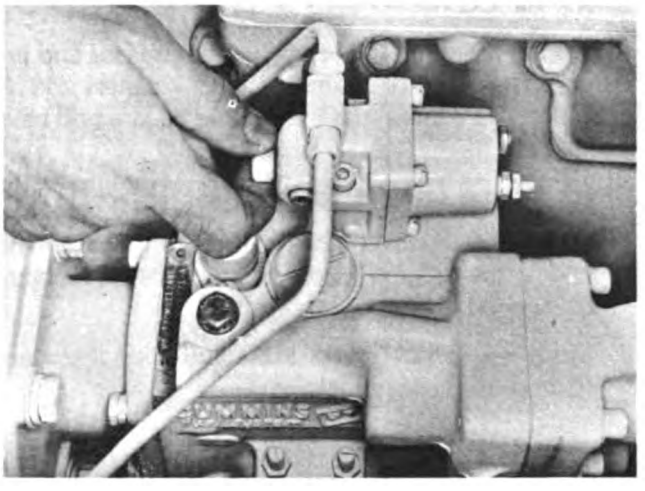

Fig. 1-9, (V21970). Using manual override knob

4. Pull the compression release (if so equipped) and press the starter button or turn the switch-key to the "start" position. After three or four seconds of cranking, close the compression release (if so equipped) and continue to crank until the engine fires.

Caution: To prevent permanent cranking motor damage, do not crank the engine for more than 30 seconds continuously. If the engine does not fire within the first 30 seconds, wait one to two minutes before recranking.

5. At the initial start or after oil or filter changes and after the engine has run for a few minutes, shut it down and wait 15 minutes for the oil to drain back into the pan. Check the engine oil level again; add oil as necessary to bring the oil level to the "H" mark on the dipstick. The drop in oil level is due to absorption by the oil filters. Never operate the engine with the oil level below the low level mark or above the high level mark.

Cold-Weather Starting

Note: A water jacket heater is recommended for stand-by generator set applications installed in a cold climate.

Preheater

The glow plug system supplies heat to the cylinders so that compression temperatures are sufficient to ignite the fuel.

To aid in starting the engine when the temperature is 50°F [10.0°C] or below, an intake air preheater is available.

Preheater equipment consists of a hand-priming pump to pump fuel into the intake manifold, and a switch to turn on the glow plug which is electrically heated by the battery. Fuel burns in the intake manifold and heats the intake air.

Warning: Do not use vapor in conjunction with the preheater. To do so could result in a fire.

To use the preheater for cold starting:

1. Set the throttle in idle position. Turn the glow plug toggle switch to the "ON" position. The red indicator light must be on.
2. After the red light has been on for 20 seconds, start cranking the engine. As soon as the engine begins rotating, operate the preheater priming pump to maintain 80 to 100 psi [552 to 689 kPa] fuel pressure. Use of the primer before the 20-second interval will wet the glow plug and prevent heating.
3. If the engine does not start within 30 seconds, stop cranking. Wait one or two minutes and repeat the cranking operation.
4. After the engine starts, pump the primer slowly to keep the engine idling smoothly. In cold weather this may require 4 to 5 minutes or longer. Do not accelerate the engine.
5. When the engine has warmed up so it does not falter between primer strokes, stop pumping. Close and lock the primer. Turn off the glow plug toggle switch. (The red indicator light will go out.)
6. If the engine gives no indication of starting during the first three full strokes of the preheater pump, touch-check the intake manifold for heat. If there is no heat, check the electrical wiring. If the wiring is all right, remove the 1/8 inch pipe plug (1, Fig. 1-10) from the manifold near the glow plug and

Digitized by Google

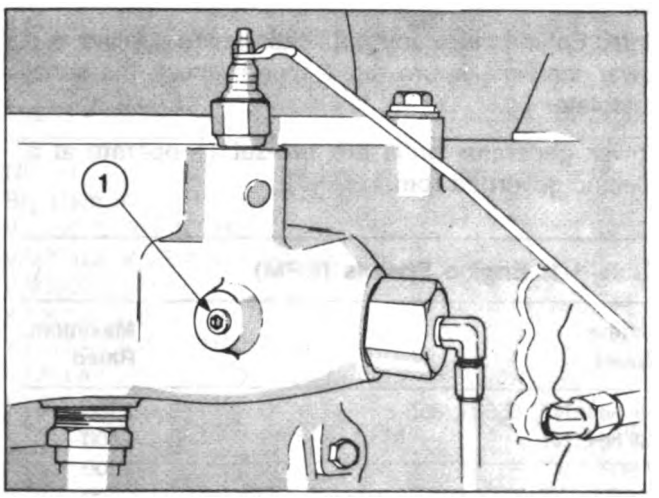

Fig. 1-10,(OM1006L). Glow plug inspection hole NT-855 C.I.D. Engine

close the glow plug manual switch for 15 seconds and observe the glow plug through the 1/8 inch plug hole. The glow plug should be white hot; if not, connect the wiring to a 6- to 12-volt (as used) source and check the amperage; it should be 30 to 32 (minimum). If the glow plug is all right, check the manual switch and resistor (if used) and replace if necessary.

Note: The preheater priming pump, switches and resistor are located at the instrument panel and are to be checked during engine starting.

The cold starting aid, approved for use in Cummins Engines, has been based upon starting aid capabilities to —25° F [—32° C].

Caution: Do not attempt to use vapor compound type starting aids near heat, open flame or on engines equipped with a glow plug system.

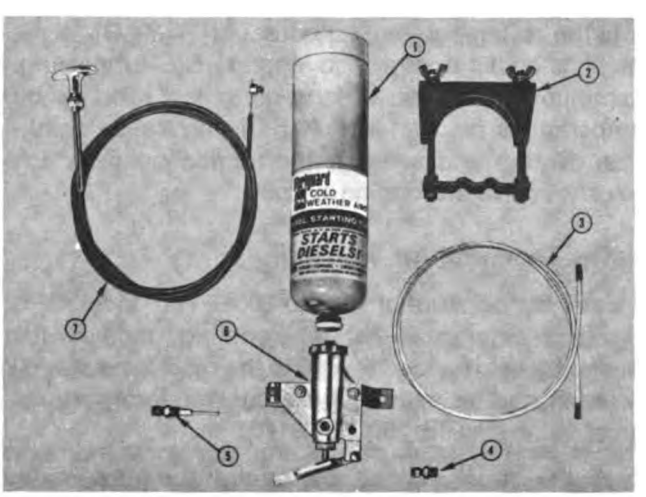

Fig. 1-11,(OM1007L). Manually operated valve

Manually Operated Valve

The manually operated valve, illustrated in Fig. 1-11 includes the valve body assembly (6), clamp (2) and nylon tube (3). The fuel cylinder (1), atomizer fitting (5) and pull control (7) must be ordered separately.

Standard pull or throttle control cables may be used, to actuate the manual valve, if desired.

Electrically Operated Valve

The electrically operated valve, Fig. 1-12, includes the valve body (7), 90 degree elbow (5), clamp (2), push button switch (6), and nylon tube (3). The thermostat is mounted on the engine exhaust manifold and cuts out the valve by sensing manifold heat when the engine is running. See parts catalog for fuel cylinder (1) and fuel atomizer fittings (4). These fittings must be ordered separately, as required.

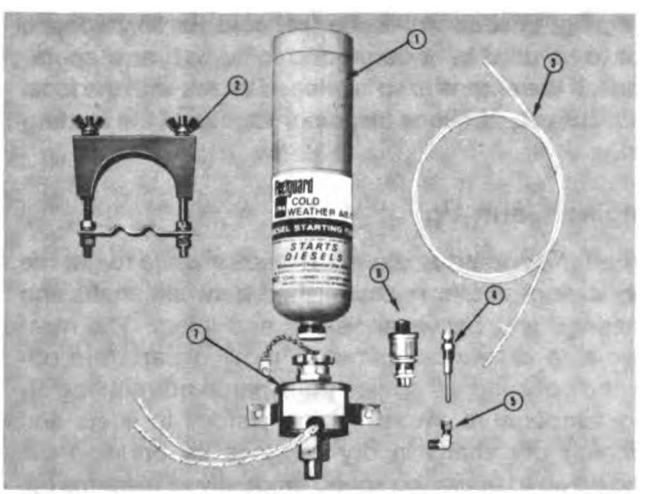

Fig. 1-12,(OM1008L). Electrically operated valve

Installation Recommendations

The atomizer fittings must be mounted in the engine air intake manifold or inlet connection to provide an equal distribution of starting fuel to each cylinder. The atomizer holes are 180 degrees apart and must be mounted so the spray is injected the "long way" of the manifold. If incorrectly installed, the spray goes crosswise of the manifold.

Recommended Starting Technique Using Fleetguard Starting Aid

1. Set the throttle for idle.
2. Disengage the driven unit or make sure gears are in neutral.
3. Open the manual fuel shut-down valve, or electric

Digitized by Google

shut-down valve, whichever is used.

4. Engage the starter and while cranking, apply metered amounts of starting fluid until the engine idles smoothly.

Use of Starting Fluid Without Metering Equipment

1. Spray starting fluid into the air cleaner intake, while a second man cranks the engine.

Warning: Never handle starting fluid near an open flame. Never use it with a preheater or flame thrower equipment. Do not breathe the fumes. Use of too much will cause excessively high pressures and detonation, or over speed the engine.

2. Starting aid fumes will be drawn into the air intake manifold and the cold engine should start without difficulty.

Warning: Fuel oil or volatile fuel cold starting aids are not to be used in underground mine or tunnel operations. If the engine is so equipped check with the local U.S. Bureau of Mines inspector for use of the starting aid.

Engine Warm-Up

When the engine is started, it takes a while to get the lubricating oil film re-established between shafts and bearings and between pistons and liners. The most favorable clearances between moving parts are obtained only after all engine parts reach normal operating temperature. Avoid seizing pistons in liners and running dry shafts in dry bearings by bringing the engine up to operating speed gradually as it warms up.

On some emergency equipment (such as fire pump engines) warm-up may not be necessary due to the equipment being housed inside a heated building. For an engine starting with a parasitic load, such as a fire pump, the coolant temperatures must be a minimum of 120° F [49° C].

Engine Speeds

All Cummins engines are equipped with governors to prevent speeds in excess of the minimum or predetermined lower speed rating.

The governor has two functions: First, it provides the fuel needed for idling when the throttle is in the idle position. Second, it overrides the throttle and shuts off the fuel if the engine rpm exceeds the maximum rated speed.

Speeds listed in Table 1-1 are for engines rated at maximum rpm and fuel rate.

Note: Engines in many applications are applied at a lower than maximum rated speed; check the serial dataplate.

Power generator units are pre-set to operate at a specific governed rpm.

Table 1-1: Engine Speeds (RPM)

Engine Model	Maximum Rated
All NH, NT, 855-R, 855-L	2100
All NH, NT	2300
V-903	2600
VT-903	2400
V-378, V-504, V-555	3000
V-378, V-504, V-555	3300
V-1710, V-1710-L	2100
KT-1150	2100
KTA-1150	2100
KT-2300	2100
KTA-2300	2100
KTA-3067	2100

Oil Temperature

The oil temperature gauge normally should read between 180° F [82° C] and 225° F [107° C]. Under full load conditions, an oil temperature of 240° F [116° C] for a short period is not cause for alarm.

Caution: Any sudden increase in oil temperature which is not caused by a load increase is a warning of possible mechanical failure and should be investigated at once.

During the warm-up period, apply the load gradually until the oil temperature reaches 140° F [60° C]. While the oil is cold it does not do a good job of lubricating. Continuous operation or long periods of idle with oil temperatures below 140° F [60° C] may cause crankcase dilution and acids in the lubricating oil which quickly accelerate engine wear.

Water Temperature

A water temperature of 160° to 200° F [71° to 93° C] is the best assurance that the working parts of the engine have expanded evenly to the most favorable oil clearances. Maximum engine coolant temperatures should not exceed 200° F [93° C].

Keep the thermostats in the engine during summer and winter, avoid long periods of idling, and take the necessary steps to keep the water temperature up to a

Digitized by Google

Table 1-2: Oil Pressure PSI [kPa] @ 225°F [107°C]

Engine Series	Minimum @ Idle Speed	Rated Speed
NH/NT	8 [55]	40/70 [276/483]
Big Cam II	8 [55]	25/45 [172/310]
VT-350, V-903, VT-903	5 [34]	40/65 [276/448]
V/VT-378, V/VT-504, V/VT-555	10 [69]	50/90 [345/620]
V/VT/VTA-1710	15 [103]	50/90 [345/620]
KT/KTA-1150	15 [103]	45/70 [310/483]
KT/KTA-2300 @ 2100 RPM	15 [103]	45/70 [310/483]
KT/KTA-2300 @ 1500, 1800 or 1950 RPM	15 [103]	40/70 [276/483]
KT/KTA-3067 @ 2100 RPM	20 [138]	45/70 [310/483]
KT/KTA-3067 @ 1500 or 1800 RPM	15 [103]	40/70 [276/483]

minimum of 160°F [71°C]. If necessary in cold weather, use radiator shutters or cover a part of the radiator to prevent overcooling.

Oil Pressure

Normal engine oil pressures at 225°F [107°C] oil temperature are listed in Table 1-2.

Note: Individual engines may vary from the above normal pressures. Observe and record the pressure when the engine is new to serve as a guide for an indication of progressive engine condition. (High oil pressure during start-up is not cause for alarm.) For record purposes these readings are more accurate and reliable when taken immediately after an oil change.

High Altitude Operation

Some engines, particularly naturally aspirated, lose horsepower when they are operated at high altitude because the air is too thin to burn as much fuel as at sea level. This loss is about 3 percent for each 1000 ft [304.8 m] of altitude above sea level for a naturally aspirated engine. Operate the engine using a lower power requirement at high altitude to prevent smoke and over-fueling.

Power Take-Off Application With PT (type G) VS Fuel Pump

The VS fuel pump governor lever is used to change the standard governed speed of the engine from rated speed to an intermediate power take-off speed.

When changing from the standard speed range to the power take-off speed with the engine idling on standard throttle, operate as follows:

1. Place the VS speed control lever in the operating position.
2. Lock the standard throttle in the full-open position.
3. Engage the power take-off.

To return to standard throttle:

1. Disengage the power take-off.
2. Return the standard throttle to the idle position.
3. Lock the VS speed control lever in the maximum speed position.

Engine Shut-Down

Idle Engine A Few Minutes Before Shut-Down

It is important to idle an engine 3 to 5 minutes before shutting it down to allow the lubricating oil and water to carry heat away from the combustion chamber, bearings, shafts, etc. This is especially important with turbocharged engines.

The turbocharger contains bearings and seals that are subject to the high heat of combustion exhaust gases. While the engine is running, this heat is carried away by oil circulation, but if the engine is stopped suddenly, the turbocharger temperature may rise as much as 100°F [38°C]. The results of the extreme heat may be seized bearings or loose oil seals.

Do Not Idle Engine for Excessively Long Periods

Long periods of idling are not good for an engine because the combustion chamber temperatures drop so low the fuel may not burn completely. This will cause carbon to clog the injector spray holes and piston rings and may result in stuck valves.

If the engine coolant temperature becomes too low,

Digitized by Google

raw fuel will wash the lubricating oil off the cylinder walls and dilute the crankcase oil so all moving parts of the engine will suffer from poor lubrication.

If the engine is not being used, shut it down.

Turn Switch to "Off" Position to Shut Down the Engine

The engine can be shut down completely by turning off the switch on installations equipped with an electric shut-down valve, or by turning the manual shut-down valve knob. Turning off the switch which controls the electric shut-down valve stops the engine unless the override button on the shut-down valve has been locked in the open position. If the manual override on the electric shut-down valve is being used, turn the button fully counterclockwise to stop the engine. Refer to "Normal Starting Procedure". The valve cannot be reopened by the switch until after the engine comes to a complete stop, unless a rapid restart valve is installed.

Caution: Never leave the switch key or the override button in the valve open or in the run position when the engine is not running. With overhead tanks this would allow fuel to drain into the cylinders, causing a hydraulic lock.

Stop Engine Immediately If Any Parts Fail

Practically all failures give some warning to the operator before the parts fail and ruin the engine. Many engines are saved because alert operators heed warning signs (sudden drop in oil pressure, unusual noises, etc.) and immediately shut down the engine.

Cold-Weather Protection

1. For cold-weather operation, use of permanent-type antifreeze with rust inhibitor additives is recommended. See Section 3.
2. Drain the cylinder block and heads on all engines by opening the petcocks and removing the drain plugs as shown in Fig's. 1-13 to 1-19. If an air compressor (Fig. 1-20), heat exchanger or other "water cooled" accessory is used, open the petcock and drain. Failure to properly drain the engine and accessories may cause serious damage during freezing weather.
3. Immersion-type water and oil heaters are available for engines used in cold-weather operations and to maintain temperatures to permit the engine to operate at full load at start-up.

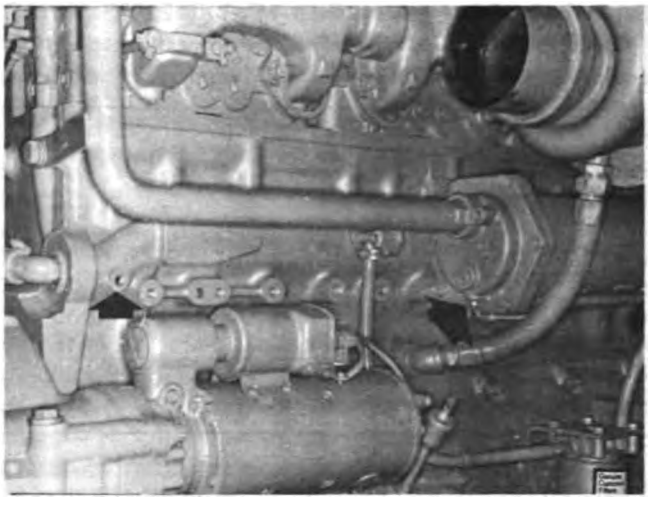

Fig. 1-13, (OM1010L). Cooling system drain points—NT-855 C.I.D. Engine

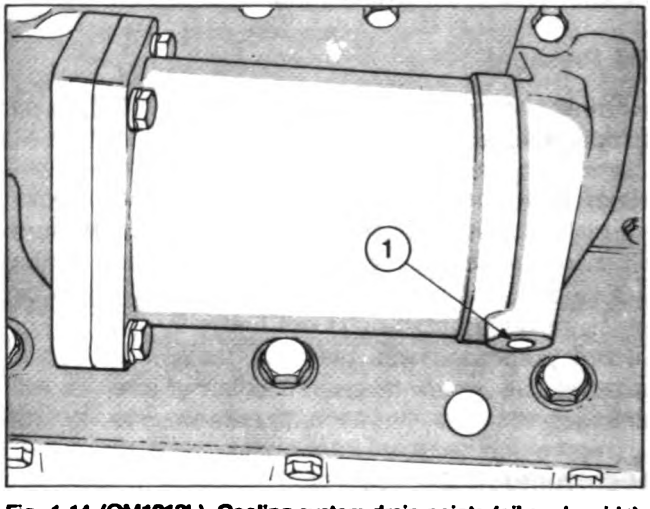

Fig. 1-14, (OM1012L). Cooling system drain points (oil cooler side) VT-903 C.I.D. Engine

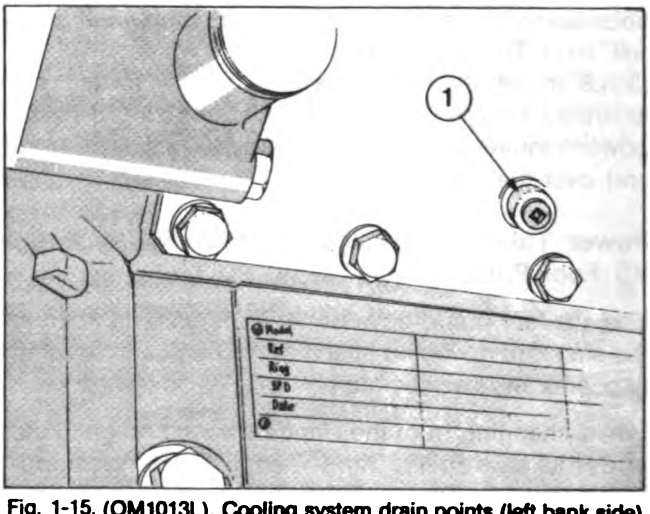

Fig. 1-15, (OM1013L). Cooling system drain points (left bank side) V/VT-555 C.I.D. Engine

Digitized by Google

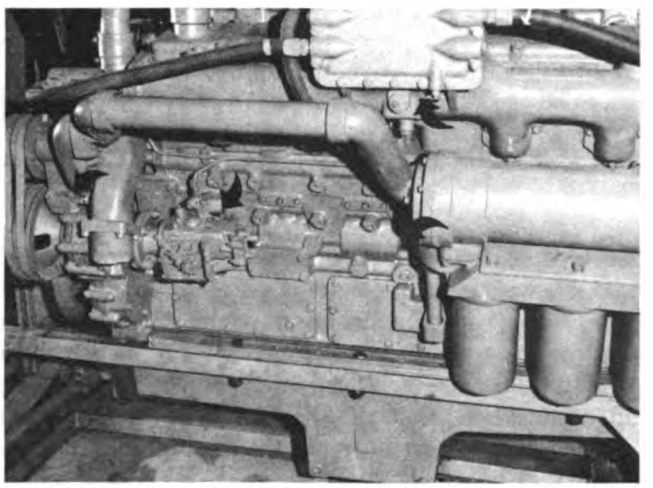

Fig. 1-16, (V40033). Coolant drain point — V/VT-1710 Engine

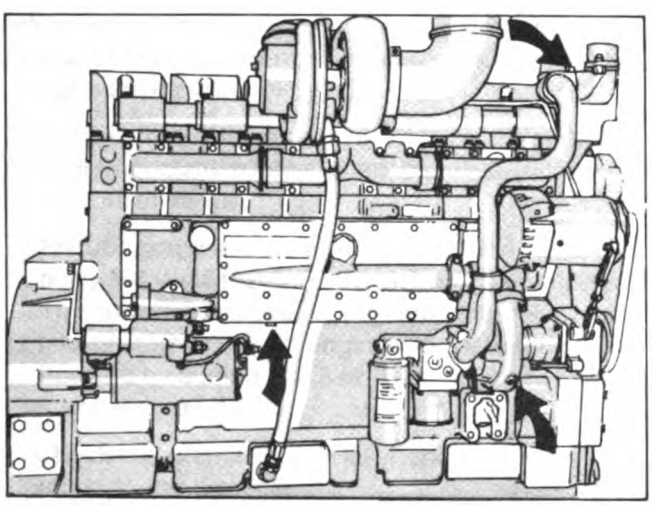

Fig. 1-17,(OM1009L). Cooling system drain points—KT/KTA-1150 C.I.D. Engine

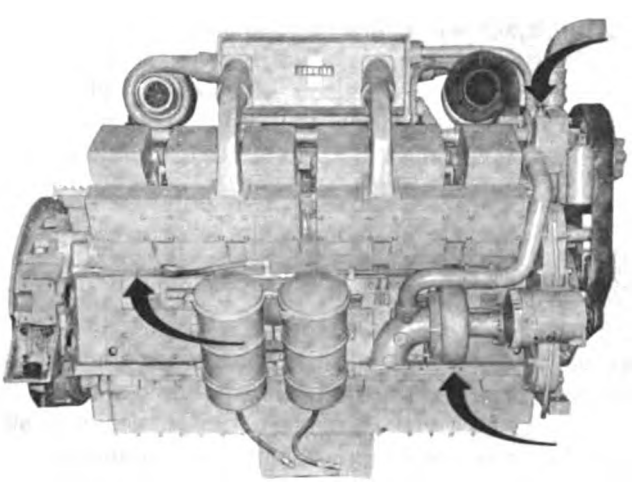

Fig. 1-18, (K21903). Coolant drain point — KT(A)-2300 Engine

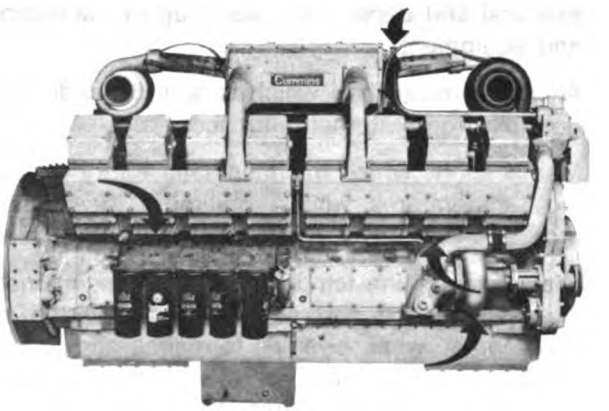

Fig. 1-19, (OM203.). Coolant drain point — KTA-3067 Engine

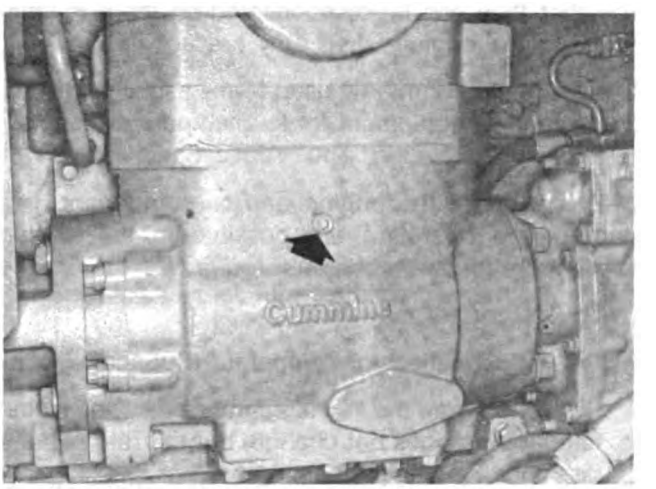

Fig. 1-20, (K21904). Two cylinder air compressor coolant drain

Engine Operation in Cold Weather

Satisfactory performance of a diesel engine operating in low ambient temperature conditions requires modification of the engine, surrounding equipment, operating practices and maintenance procedures. The colder the temperatures encountered the greater the amount of modification required and yet with the modifications applied, the engines must still be capable of operation in warmer climates without extensive changes. The following information is provided to engine owners, operators and maintenance personnel on how the modifications can be applied to get satisfactory performance from their diesel engines.

There are three basic objectives to be accomplished:

1. Reasonable starting characteristics followed by

Digitized by Google

practical and dependable warm-up of the engine and equipment.

2. A unit or installation which is as independent as possible from external influences.

3. Modifications which maintain satisfactory operating temperatures with a minimum increase in maintenance of the equipment and accessories.

If satisfactory engine temperature is not maintained, higher maintenance cost will result due to the increased engine wear, poor performance and formation of excessive carbon, varnish and other deposits. Special provisions to overcome low temperatures are definitely necessary, whereas a change to warmer climate normally requires only a minimum of revision. Most of the accessories should be designed in such a way that they can be disconnected so there is little effect on the engine when they are not in use.

The two most commonly used terms associated with preparation of equipment for low temperature operation are "Winterization" and "Arctic Specifications"

Winterization of the engine and/or components so starting and operation are possible in the lowest temperature to be encountered requires:

1. Use of correct materials.

2. Proper lubrication, low temperature lubricating oils.

3. Protection from the low temperature air. The metal temperature does not change, but the rate of heat dissipation is affected.

4. Fuel of the proper grade for the lowest temperature.

5. Heating to be provided to increase the engine block and component temperature to a minimum of —25° F [—32° C] for starting in lower temperatures.

6. Proper external heating source available.

7. Electrical equipment capable of operating in the lowest expected temperature.

Arctic specifications refer to the design material and specifications of the components necessary for satisfactory engine operation in extreme low temperatures to —65° F [—54° C]. Contact Cummins Engine Company, Inc., or the equipment manufacturer to obtain the special items required.

Caution: "Anti-leak" antifreezes are not recommended for use in Cummins Engines. Although these antifreezes are chemically compatible with DCA water treatment, the "anti-leak" agents may clog the coolant filters and render them ineffective.

Digitized by Google

Industrial Fire Pump Engines

Fire pump engines are built and applied under conditions set down by agencies such as Underwriters Laboratory; therefore, parts originally supplied must not be deviated from without qualifying agency approval. The following instructions are those special items necessary to this application, and should be used in conjunction with those previously stated.

Initial Start-Up

Note: Contact operating personnel responsible for fire protection system before starting. Obtain approval to service or repair. After repair obtain authorized signature of acceptance.

1. Remove the heat exchanger cap, check or fill the engine coolant supply; open the water filter inlet and outlet valves.
2. Prelubricate the engine with oil meeting specifications MIL-L-46152 (API-CC/SC) viscosity 10W30. This includes removal of the turbocharger oil inlet line on turbocharged engines to prelubricate the housing by adding 2 to 3 oz [60 cc] of clean engine lubricating oil.
3. Check the crankcase oil level and fill to the high mark on the dipstick.
4. Remove the fuel pump solenoid lead and crank the engine through both cranking cycles.
5. If the engine is equipped with a "Vernier throttle", place it in the idle position; if not, place the MVS throttle in the idle position. On turbocharged models the delay cylinder line may be disconnected at the block and the block opening plugged.
6. Reconnect the fuel solenoid lead and start the engine; run it at idle speed.
7. Verify the lubricating oil pressure has been established, normally in 6 to 8 seconds.

Note: Some automatic controllers require lubricating oil pressure higher than the normal pessure at 600 rpm idle. Increase the idle to 800 to 900 rpm if this condition is encountered. All turbocharged engines should be set to 800 to 900 rpm idle.

8. Continue to operate the engine for 3 to 5 minutes and review all systems for leaks or unusual conditions; correct as required.
9. Stop the engine and install ST-1224 Adapter.
10. Check the crankcase oil level and fill it to the high mark.
11. Start the engine and adjust overspeed.
12. Remove ST-1224 and replace the original adapter.
13. Clean the raw water strainer.
14. Start the engine and adjust operating speed.
15. Adjust the raw water pressure regulator.
16. Engine is now ready for normal operation.

Normal Operation

1. Daily or normal operation would include the checking of fuel, lubricating oil, coolant and correcting any leaks or unusual conditions as required.
2. Check the coolant and oil heaters to assure at least 120°F [49°C] water temperature has been maintained.
3. Manually start the engine using the prescribed starting procedure.
4. Operate the engine the prescribed period of time or 5 minutes after stabilization of the coolant temperature.
5. Shut the engine down using the normal test shutdown procedures.

Fire Pump Engines — Overspeed Switch Adjustment (IF Engine Models)

The speed switches required for overspeed protection on fire pump engines require high speed for the overspeed adjustment. All engines are now being shipped adjusted at the maximum overspeed. The following overspeed adjustments are 20 percent above the rated engine speed.

An adapter, ST-1224 with 2:1 ratio, in speed switch drive only, (1, Fig. 1-21) is available to drive the speed switch at twice the engine speed. This tool when

Digitized by Google

installed in place of the existing adapter permits adjustment to be made to the speed switch at slightly over 1/2 engine and pump speed. This maintains a pump speed well within its safe speed range while the adjustments are being made.

Table 1-3: Engine Overspeeds

Engine Model	Rated Speed	Overspeed
V-378-F1	1750-2200	2100-2640
V-378-F2	2400-3300	2880-3960
V-504-F1	1750-2200	2100-2640
V-504-F2	2400-3300	2880-3960
N-855	1460-2100	1750-2520
NT-855-F1	1750-2100	2100-2520
NT-855-F2	1750-2300	2100-2760
VT-1710-F	1750-2100	2100-2520

Adjustment Procedure

1. Remove the present tachometer drive adapter.
2. Install the service tool, ST-1224, in position of the standard drive adapter. Connect the tachometer and overspeed stop switch to the ST-1224 Tool.

Note: The overspeed stop switch cable must be connected to the short adapter connection. (1, Fig. 1-21).

3. Start the engine and warm to operating temperature.
4. Set the engine speed to one-half (1/2) the desired engine shut-down speed as indicated by the tachometer.
   a. On inline engine models, this can be accomplished by adjusting the Vernier throttle control.
   b. On Medium Duty V engines, the speed adjustment must be made by adjusting the governor idle and maximum speed screws. The idle screw is housed in the front of the MVS governor. The maximum speed screw is mounted to the MVS governor by a bracket and is on the left hand side of the fuel pump. Engine slow down is accomplished by turning the idle speed screw counterclockwise and turning the maximum speed screw in a clockwise direction. To increase the engine speed reverse the procedure.
5. Set the single element speed switch.
   a. Remove the lockwire from setscrews on the side of the switch. Loosen the three (3) setscrews.
   b. Rotate the cover clockwise (this decreases trip speed) until the switch actuates and stops the engine.
   c. Secure the setscrews and replace the locking wire.
   d. On manual reset models, re-activate the switch by pushing the reset button on top of the switch.
6. Set the dual element speed switches.

Caution: Do not break or remove the lockwire.

   a. Remove the round head dust cover screw marked 2 from the top of the switch. Fig. 1-22.
   b. Insert a 1/16 inch Hex Allen wrench into the adjusting screw located just below the surface of the cover.

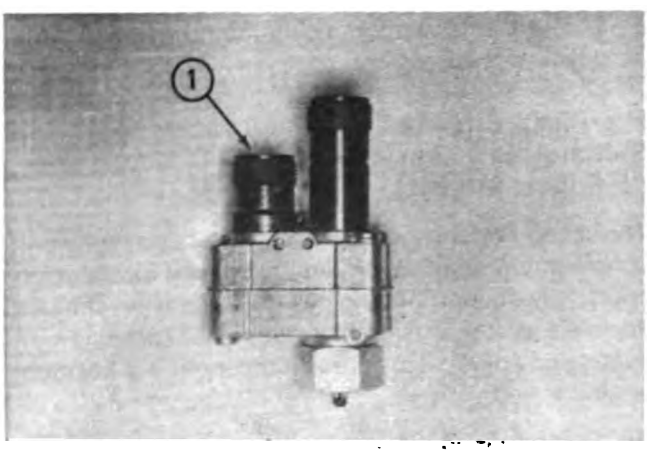

Fig. 1-21, (ST-1224). ST-1224 adapter

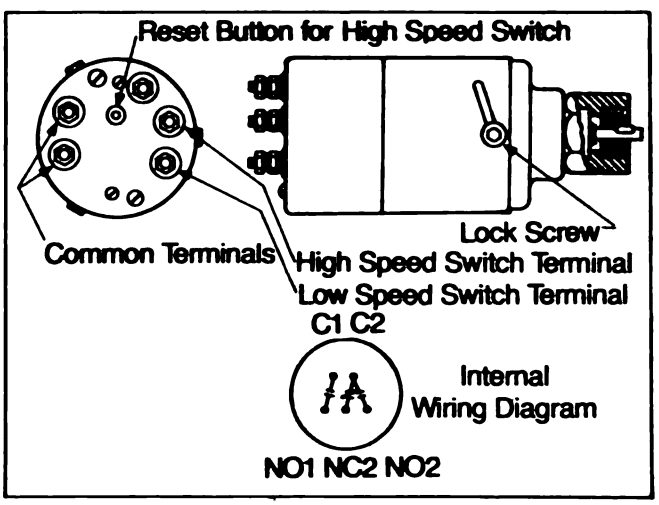

Fig. 1-22, (CGS27). Double speed switch

Digitized by Google

c. Turn counterclockwise to lower the engine shut-down speed. Turn clockwise to raise the engine shut-down speed.

Caution: Do not turn the adjusting screw more than three (3) revolutions in either direction from the factory setting. Do not attempt to set the duel element switch in the same manner as the single element switch.

d. Replace the dust cover screw removed in "Step a" above.

e. All overspeed switches must be manually reset, reactivate the switch by pushing the reset button on top of the switch.

7. Replace the service tool, ST-1224, with the original drive adapter and reconnect the cables.

Note: If the stop crank adjustment is required do not use the ST-1224 Adapter. Replace with a standard adapter to effect the adjustment.

Fire Pump Engine Operating Speed Adjustment

All Cummins fire pump engines will be shipped adjusted at the speeds in Table 1-4, unless prior approval has been established for a specific speed.

Final operating speed adjustment should be made at the time of the in-service inspection to obtain the required fire pump operating speed.

This speed adjustment must be made with the Vernier throttle in the full fuel position and the systems fire pump operating at its rated condition. All speed ranges of N-NT and V-12 models are available by adjusting the VS high speed adjusting screw. Fig's. 1-23 and 1-24.

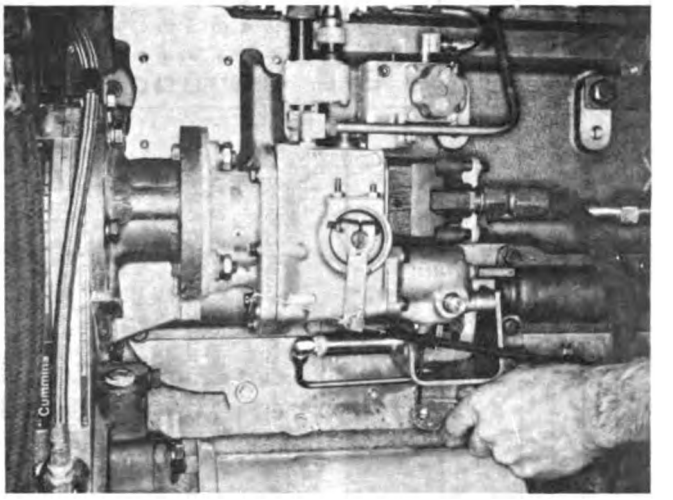

Fig. 1-23, (N11979). Adjusting engine speed

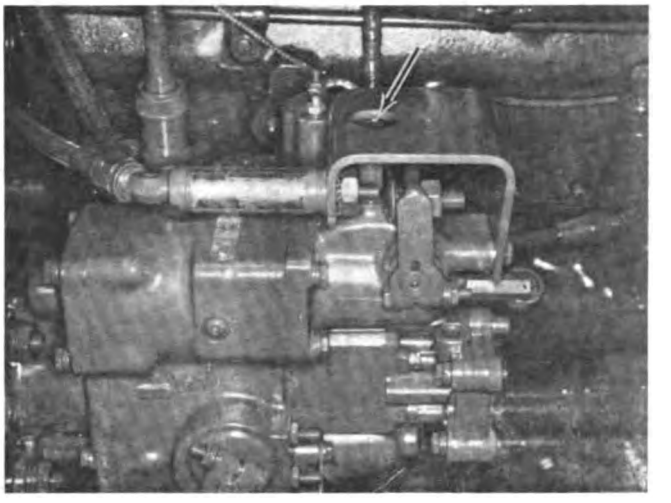

Fig. 1-24, (N11980). Governor adjusting screw

Table 1-4: Fire Pump Engine Operating Speed

Engine Model	Fuel Pump Code	Factory Adjusted Speed	Maximum Operating Speed
V-378-F1	C-653	1750	2200
V-378-F2	C-651	2400	3300
V-504 F1	C-652	1750	2200
V-504 F2	C-650	2400	3300
N-855	8761	1750	2100
NT-855 F1	8770	1750	2100
NT-855 F2	8771	1750	2300
VT-1710 F	8784	1750	2100

This screw requires a 1/8 inch Allen wrench and adjustment is made by loosening the 7/16 inch locking nut and backing the screw out to increase the engine speed through the full speed range.

The V-378 and V-504 F1 and F2 models require two differently calibrated fuel pumps. One pump code provides speeds between 1750 and 2300 rpm. A different pump code is required for speeds between 2400 and 3300 rpm. The required speeds on these models are similarly obtained by MVS adjustment within the calibrated range as indicated above. It normally is prohibited by UL and FM to change engine ratings by changing fuel pumps on any models of fire pump engines. In the event of fuel pump rebuild, the pump must be calibrated to the original code and **any deviation would be a violation to the insurance agencies approval.**

Digitized by Google

Industrial Fire Pump Engine Maintenance Schedule

EQUIPMENT NO. _____ ENGINE SERIAL NO. _____
MECHANIC _____ HOURS, CALENDAR _____
TIME SPENT _____ CHECK PERFORMED _____
PARTS ORDER NO. _____ DATE _____

CUMMINS DIESEL FIRE PUMP ENGINES

Check each operation as performed.

A—CHECK	B—CHECK	C—CHECK	D—CHECK	SEASONAL	OTHER
Daily ☐ Check engine operating log ☐ Check engine: • oil level • coolant level ☐ Check engine lubricating oil and coolant heaters * • oil bath cleaner oil level ☐ Visually inspect engine for damage, leaks, loose or frayed belts **Weekly** ☐ Repeat Daily "A" Check ☐ Check air cleaner • clean precleaner dust pan • check restriction indicator • clean/change air cleaner element * • change oil bath cleaner oil ☐ Drain water/sediment from fuel tanks & fuel filters ☐ Check raw water strainer ☐ Check starter battery ☐ Start engine & check for unusual noise	**Repeat "A" (Daily/Weekly)** ☐ Change engine oil ☐ Change filters • oil full flow • fuel filter ☐ Check coolant • check engine coolant DCA concentration level. Add make-up DCA and change element ☐ Clean/change • crankcase breather * Clean oil bath air cleaner tray/screen	**Repeat "A" & "B"** ☐ Adjust valves & injectors * Clean oil bath air cleaner	**Repeat "A", "B" & "C"** ☐ Clean & calibrate injectors, fuel pump ☐ Check and/or rebuild and/or replace the following assemblies: • turbocharger • vibration damper ☐ Rebuild or replace the following assemblies: • water pump	**Fall** ☐ Clean & flush cooling system ☐ Replace hose as required ☐ Check cold start & thermal aids ☐ Clean electrical connections and check batteries ☐ Clean engine water heater **Spring** ☐ Steam clean engine ☐ Tighten mounting bolts ☐ Check crankshaft end clearance ☐ Check heat exchanger zinc plugs annually or as required ☐ Check overspeed switch	**Electrical Components** ☐ + Starter ☐ + Alternator ☐ + Batteries ☐ + Voltage regulator ☐ + Switches ☐ + Gauges ☐ + Tachometer ☐ + On these components follow the manufacturer's procedure

Engine Series	Interval	B	C	D		
All	Hours Calendar	250 6 mos.	1500 1 year	4500 2 years		

Note: Under circumstances where hours of operation are not accumulated at a fast rate, use calendar time. In other words, use hours, or calendar time, whichever comes first.

***Cummins Engine Company, Inc., recommends the use of dry type air cleaners.**

Digitized by Google

Maintenance

Maintenance is the key to lower operating costs. A diesel engine requires regularly scheduled maintenance to keep it running efficiently.

Maintenance Schedule

Preventive maintenance is the easiest and least expensive type of maintenance. It permits the Maintenance Department to do the work at a convenient time.

A Good Maintenance Schedule Depends On Engine Application

Actual operating environment of the engine governs the maintenance schedule. The suggested check sheet on the following page indicates some checks have to be performed more often under heavy dust or other special conditions.

Using the Suggested Schedule Check Sheet

The maintenance schedule check sheet is designed as a guide until adequate experience is obtained to establish a schedule to meet a specific operation.

A detailed list of component checks is provided through several check periods; also a suggested schedule basis is given for hours of operation, or calendar of time.

A maintenance schedule should be established using the check sheet as a guide; the result will be a maintenance program to fit a specific operation.

The check sheet shown can be reproduced by any printer. The person making each check can then indicate directly on the sheet that the operation has been completed. When a complete column (Under A, B, C, etc.) of checks is indicated, the engine will be ready for additional service until the next check is due.

Storage for Engines Out of Service

If an engine remains out of service and its use is not immediately forthcoming, special precautions should be taken to prevent rust. Contact the nearest Cummins Distributor or consult applicable Shop Manual for information concerning engine storage procedure.

Digitized by Google

Maintenance Schedule

EQUIPMENT NO. _____ ENGINE SERIAL NO. _____
MECHANIC _____ HOURS, CALENDAR _____
TIME SPENT _____ CHECK PERFORMED _____
PARTS ORDER NO. _____ DATE _____

CUMMINS DIESEL ENGINES

Check each operation as performed.

A—CHECK	B—CHECK	C—CHECK	D—CHECK	SEASONAL	OTHER
Daily ☐ Check operator's report ☐ Check engine: • Oil level • Coolant level * • Oil bath cleaner oil level ☐ Visually inspect engine for damage, leaks, loose or frayed belts and listen for unusual noises **Weekly** ☐ Repeat Daily "A" Check ☐ Check air cleaner • Clean precleaner dust pan • Check restriction indicator • Clean/change air cleaner element * • Change oil bath cleaner oil ☐ Drain air tanks ☐ Drain water/sediment from fuel tanks and fuel filters	**Repeat "A" (Daily/Weekly)** ☐ Change engine oil ☐ Change filters • Oil full flow • Oil by-pass • Fuel filter ☐ Check coolant • Check engine coolant DCA concentration level. Add make-up DCA and change element ☐ Check oil levels • Aneroid • Hydraulic governor ☐ Clean/change • Crankcase breather—All except KT/KTA-2300 and 3067 • Air compressor breather * ☐ Clean oil bath air cleaner tray/screen	**Repeat "A" & "B"** ☐ Adjust valves & injectors ☐ Change oil • Aneroid • Hydraulic governor ☐ Replace aneroid breather ☐ Inspect back side idler * ☐ Clean oil bath air cleaner	**Repeat "A", "B" & "C"** ☐ Clean & calibrate injectors, fuel pump and aneroid ☐ Check and/or rebuild and/or replace the following assemblies: • Turbocharger • Vibration damper • Air compressor ☐ Rebuild or replace the following assemblies: • Fan hub • Idler pulley assembly • Water pump • Back side idler ☐ Clean/change crankcase breather on KT/KTA-2300 and 3067	**Fall** ☐ Clean and flush cooling system ☐ Replace hose as required ☐ Check cold start & thermal aids ☐ Clean electrical connections and check batteries **Spring** ☐ Steam clean engine ☐ Tighten mounting bolts ☐ Check crankshaft end clearance ☐ Check heat exchanger zinc plugs annually or as required	☐ + Alternator ☐ + Generator ☐ + Starter ☐ + Exhaust brake ☐ + Air compressor ☐ + Electrical connections ☐ + Batteries ☐ + Freon compressor + On these components follow the manufacturer's recommended maintenance procedure
Engine Series **Interval**	**B**	**C**	**D**		
All Hours Calendar	Chart Method or 250 6 mos.	1500 1 year	4500 2 years		

Note: Under circumstances where hours of operation are not accumulated at a fast rate, use calendar time. In other words, use hours, or calendar time, whichever comes first.

***Cummins Engine Company, Inc., recommends the use of dry type air cleaners.**

Digitized by Google

Maintenance Performance Record

Engine Serial No. _____ Engine Model _____

Owner Name _____ Equipment Name/Number _____

Interval Basis Mileage	[Kilometres]	Check	Mileage	[Kilometres]	Check	Other	Date	Actual Mileage	Distributor/Dealer Location/Shop	Authorized Signature
		A, B			A, B					
		A, B			A, B					
		A, B			A, B					
		A, B			A, B					
		A, B, C								
		A, B			A, B, C					
		A, B			A, B					
		A, B			A, B					
		A, B			A, B					
		A, B, C			A, B					
		A, B								
		A, B			A, B, C					
		A, B			A, B					
		A, B			A, B					
		A,B,C,D			A, B					
		A, B			A, B					
		A, B			A,B,C,D					

To prove that the Engine has been properly maintained retain records, such as work orders and receipts, showing that scheduled maintenance has been performed. The maintenance record form on this page is for that purpose.

Digitized by Google

Scheduled Maintenance

Schedule I, Schedule II

The following maintenance schedules should be used to establish maintenance practices for Cummins standby (GS) or continuous duty (GC) generator sets.

Schedule I is used with standby applications. Many of these installations are regulated by NFPA and/or local codes (reference NFPA No. 76A).

Standby rated generator sets are for supplying electric power in the event of normal utility power failure. No overload capability is available for this rating. This rating may be used for continuous service for as long as the emergency may last. This rating conforms with the BS 649:1958 overload rating and DIN "B" 6270.

Schedule II is used with continuous duty applications.

Continuous duty rated generator sets are for supplying electric power in lieu of commercially purchased power. Intermittent overloads up to the standby rating are allowable. This rating may be used for continuous service in commercial applications and it conforms with BS 649:1958 and DIN "A" 6270 for generator set applications.

Using The Suggested Schedule Check Sheet

Actual operating environment of the engine governs the maintenance schedule. The suggested check sheet on the following page indicates some checks have to be performed more often under heavy dust or other special conditions.

The maintenance schedule check sheet is designed as a guide until adequate experience is obtained to establish a schedule to meet a specific operation.

A detailed list of component checks is provided through several check periods; also a suggested schedule basis is given for hours of operation, or calendar of time.

A maintenance schedule should be established using the check sheet as a guide; the result will be a maintenance program to fit a specific operation.

Cummins Standby Generator Sets

Cummins standby generator sets may be required to start and come on line in 10 seconds or less.

These engines must be equipped with engine coolant heaters capable of maintaining coolant temperature at a minimum of 100° F [38° C].

Engines subject to ambient temperatures less than 70° F [21° C] must also be equipped with a lubricating oil heater. When using a lubricating oil heater immersed in oil, the maximum surface of heater in contact with oil, should be less than 300° F [149° C] to minimize formation of hard carbon on the heating element.

Recommended wattage for the heaters when the unit is in a protected area or in an enclosure are shown in Bulletin No. 3379009, in Section 7 Miscellaneous.

Standby units should be operated once a week under a minimum of 25% of rated KW load for at least thirty minutes. During this test, the engine must reach normal operating temperature.

Cummins Continuous Duty Generator Sets

Continuous duty generator sets may be equipped with a cold starting aid. Maintenance procedures for these devices can be found in the seasonal maintenance section.

Digitized by Google

Stand-By Generator Set Maintenance

Engine Systems		Checks	A			B	
			Daily	Weekly	Monthly	6 Mos./ 250 Hrs.	Annual
Lubricating	Check:	— For Leaks	●	●	●	●	●
		— Operation of Oil Heater	●	●	●	●	●
		— Engine Oil Level		●	●	●	●
		— Hydraulic Governor Oil Level		●	●	●	●
	Change:	— Full Flow Filter				●	●
		— By-Pass Filter				●	●
		— Engine Oil				●	●
		— Hydraulic Governor Oil				●	●
Cooling	Check:	— For Leaks	●	●	●	●	●
		— For Radiator Air Restriction			●	●	●
		— Operation of Coolant Heater	●	●	●	●	●
		— Hose and Connections			●	●	●
		— Coolant Level		●	●	●	●
		— Anti-Freeze and DCA Concentration			●	●	●
		— Belt Condition and Tension			●	●	●
		— Fan Hub, Drive Pulley and Water Pump					●
		— Heat Exchanger Zinc Anode Plugs				●	●
		— Motor Operated Louvers			●	●	●
	Change:	— DCA Water Filter				●	●
	Clean:	— Cooling System					●
Air Intake	Check:	— For Leaks			●	●	●
		— Air Cleaner Restriction		●	●	●	●
		— Piping and Connections				●	●
	Clean:	— Crankcase Breather				●	●
		— Or Change Air Cleaner Element				●	●
Fuel	Check:	— For Leaks	●	●	●	●	●
		— Fuel Level			●	●	●
		— Governor Linkage				●	●
		— Fuel Lines and Connections				●	●
		— Fuel Transfer Pump			●	●	●
	Drain:	— Sediment from Tanks				●	●
	Change:	— Fuel Filters				●	●
		— Float Tank Breather					●
Exhaust	Check:	— For Leaks			●	●	●
		— For Exhasut Restriction			●	●	●
	Drain:	— Condensate Trap			●	●	●
	Tighten:	— Exhaust Manifold and Turbocharger Capscrews					●
Electrical	Check:	— Battery Charging System		●	●	●	●
		— Battery Electrolyte Level and Specific Gravity			●	●	●
		— Safety Controls and Alarms				●	●
Engine Related	Check:	— For Unusual Vibration		●	●	●	●
		Tighten Mounting Hardware					●
	Clean:	— Engine					●
Main Generator	Check:	— Air Inlet and Outlet for Restriction			●	●	●
		— Windings and Electrical Connections					●
		— Operation of Generator Heater Strips					●
	Grease:	— Bearing					●
		Measure and Record Generator Winding Resistance					●
	Check/Clean:	— Generator				●	●
Switchgear	Check:	— Start Switch in Automatic	●	●	●	●	●
		— Instrumentation					●
		— Power Distribution Wiring and Connections				●	●
		— Power Circuit Breaker				●	●
		— Transfer Switch				●	●
Operational Procedures	Perform:	— Operational Load Test		●	●	●	●
		— Generator Load Bank Test					●
	Check:	— Service Tool Availability			●	●	●

Digitized by Google

Continuous Duty
Generator Set Maintenance

Engine Systems	Checks		A Daily	B 6 Mos./250 Hrs.	C 1 Year/1500 Hrs.	D 2 Years/4500 Hrs.	Annual
Lubricating	Check:	— For Leaks	●	●	●	●	●
		— Operation of Oil Heater					●
		— Engine Oil Level	●	●	●	●	●
		— Hydraulic Governor Oil Level	●	●	●	●	●
	Change:	— Full Flow Filter		●	●	●	●
		— By-Pass Filter		●	●	●	●
		— Engine Oil		●	●	●	●
		— Hydraulic Governor Oil		●	●	●	●
Cooling	Check:	— For Leaks	●	●	●	●	●
		— For Radiator Air Restriction	●	●	●	●	●
		— Operation of Coolant Heater					●
		— Hose and Connections	●	●	●	●	●
		— Coolant Level	●	●	●	●	●
		— Anti-Freeze and DCA Concentration		●	●	●	●
		— Belt Condition and Tension	●	●	●	●	●
		— Fan Hub, Drive Pulley, and Water Pump		●	●	●	●
		— Heat Exchanger Zinc Anode Plugs					●
	Change:	— DCA Water Filter		●	●	●	●
	Clean:	— Cooling System					●
Air Intake	Check:	— For Leaks	●	●	●	●	●
		— Air Cleaner Restriction	●	●	●	●	●
		— Piping and Connections		●	●	●	●
	Clean:	— Crankcae Breather		●	●	●	●
		— Or Change Air Cleaner Element		●	●	●	●
Fuel	Check:	— For Leaks	●	●	●	●	●
		— Governor Linkage		●	●	●	●
		— Fuel Lines and Connections		●	●	●	●
	Drain:	— Sediment from Tanks	●	●	●	●	●
	Change:	— Fuel Filters		●	●	●	●
	Clean:	— Float Tank Breather		●	●	●	●
		— and Calibrate Injectors				●	
		— and/or Calibrate Fuel Pump				●	
		Adjust Injectors and Valves			●	●	
Exhaust	Check:	— For Leaks	●	●	●	●	●
		— For Exhaust Restriction			●	●	
	Clean:	— Turbocharger Comp. Wheel and Diffuser				●	
	Check:	— Turbocharger Bearing Clearances				●	
		Tighten Exhasut Manifold and Turbocharger Capscrews			●	●	
Engine Related	Check:	— For Unusual Vibration	●	●	●	●	●
		— Vibration Damper				●	
		— Crankshaft End Play				●	
		Tighten Mounting Hardware				●	
	Clean:	— Engine					●
	Grease:	— Fan Pillow Block Bearings		●	●	●	●
Electrical	Check:	— Battery Charging System					●
		— Battery Electrolyte Level					
		Specific Gravity		●	●	●	●
		— Glow Plug					●
		— And Clean Magnetic Pickup Unit			●	●	
		— Safety Control and Alarms			●	●	
Main Generator	Check:	— Air Inlet and Outlet for Restriction	●	●	●	●	●
		— Windings and Electrical Connections	●	●	●	●	●
		— Operation of Generator Heater Strips					●
	Grease:	— Bearing			●	●	
	Clean:	— Generator					●
Switchgear	Check:	— Power Distribution Wiring and Connections	●	●	●	●	●
		— Power Circuit Breaker			●	●	
		— Transfer Switch			●	●	
Operational Procedures		Perform: Generator Load Bank Test					●

Digitized by Google

"A" Maintenance Checks—Daily

Make a Daily Report of Engine Operation to the Maintenance Department

The engine must be maintained in top mechanical condition if the operator is to get optimum satisfaction from its use. The maintenance department needs daily running reports from the operator to make necessary adjustments in the time allotted and to make provisions for more extensive maintenance work as the reports indicate the necessity.

Comparison and intelligent interpretation of the daily report along with a practical follow-up action will eliminate most failures and emergency repairs.

Report to the Maintenance Department any of the following conditions:

1. Low lubricating oil pressure.
2. Low power.
3. Abnormal water or oil temperature.
4. Unusual engine noise.
5. Excessive smoke.
6. Excessive use of coolant, fuel or lubricating oil.
7. Any fuel, coolant or lubricating oil leaks.

Check Engine

Check Engine Oil Level

Note: Some dipsticks have dual markings, with high- and low-level marks: static oil marks on one side, engine running at low idle speed marks on opposite side. Be sure to use the proper scale.

1. Check the oil level with the dipstick oil gauge located on the engine. Fig. 2-1. For accurate readings, the oil level should not be checked for approximately 15 minutes after the engine is shut-down. Keep the dipstick with the oil pan with which it was originally shipped. Keep the oil level as near the "H" (high) mark as possible.

Caution: Never operate the engine with the oil level below the "L" (low) mark or above the "H" (high) mark.

2. If necessary, add oil of the same quality and brand as already in the engine. See Section 3.

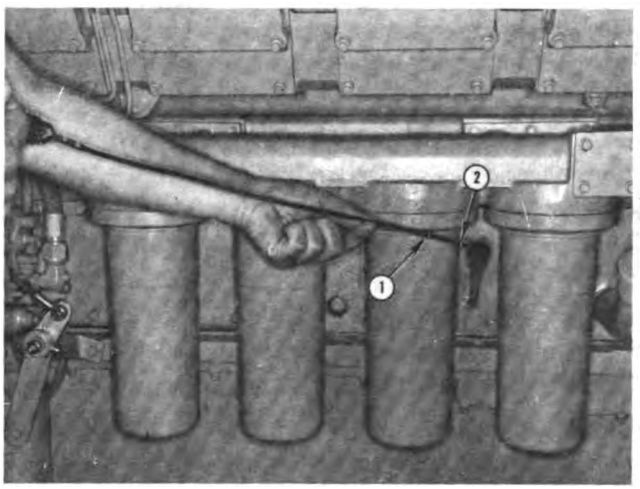

Fig. 2-1, (K21901). Checking engine oil level

Check Engine Coolant Level

Keep the cooling system filled to the operating level. Check the coolant level daily or at each fuel fill point. Investigate for causes of coolant loss. Check the coolant level only when the system is cool.

Check Belts

Visually check belts for looseness. If there is evidence of belt slippage adjust as follows:

Using the appropriate gauge, Fig's. 2-2 and 2-3, check

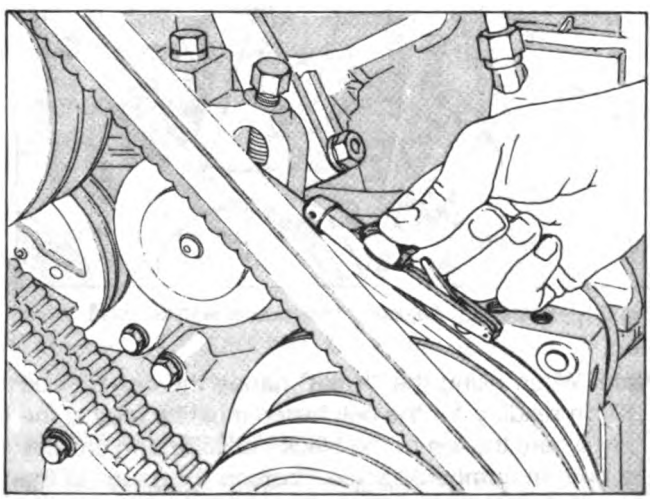

Fig. 2-2, (OM1014L). Checking belt tension with a Krikit gauge

Digitized by Google

Table 2-1: Belt Tension (Lbs.)

Belt Width Inches	Belt Gauge	New Belt* Tension (lb.) ± 10	Minimum Tension (lb.)	• Used Belt Installation Tension • If Below Min. Tension, Retension to (lb.) ± 10
.380	ST-1274	140-150	60	100
.440	CAN-292	140-150	60	100
1/2		140-150	60	100
11/16		160-170	60	100
3/4	ST-1138	160-170	60	100
7/8		160-170	60	100
K-Sect. 5 Rib V-Ribbed	ST-1293	125-135	60	100
K-Sect. 6 Rib V-Ribbed	ST-1293	150-160	70	120
K-Sect. 10 Rib V-Ribbed	N/A	250-260	140	200

* Used belts should be retensioned to values listed in this column.

Note: A belt is considered as used if it has been in operation for a period of time of at least 5 minutes.

and/or adjust belts to the tension as indicated in Table 2-1.

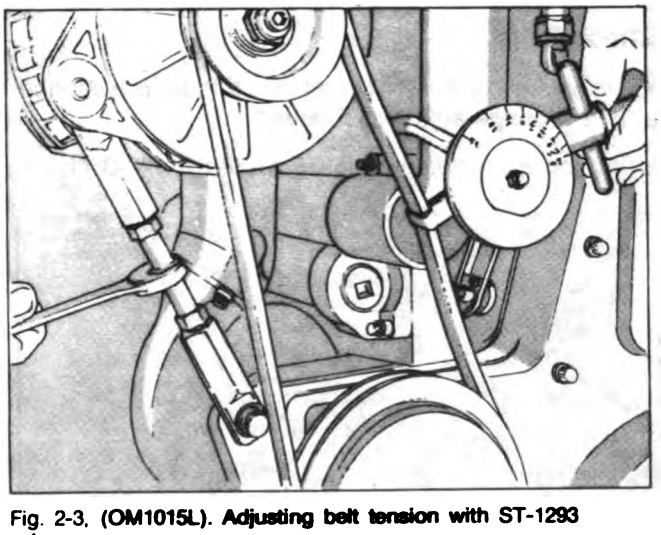

Fig. 2-3. (OM1015L). Adjusting belt tension with ST-1293

Note: When using the "Krikit" gauge the correct belt tension reading for the belt tested must be read at the point where the **top** of the black indicator arm crosses the bottom numbered scale. Position the gauge in the center of the belt between two pulleys. The flange at the side of the gauge should be flat against the edge of the belt.

Inline Engine Water Pump Belts (No Idler)

1. Eccentric water pump adjustment.
   a. Loosen the water pump clamp ring to allow the pump body to turn.
   b. Loosen the pump body by pulling up on the belts. A sharp jerk may be required.
   c. Insert a bar in the water pump body slots and rotate the pump body counterclockwise to tighten the belts.

Note: Do not adjust to final tension at this time.

   d. Snug the clamp ring capscrew farthest from the belts, on the exhaust side to 5 ft-lbs [7 N•m].
   e. Snug the two capscrews above and below the first one to 5 ft-lbs [7 N•m].
   f. Finish tightening by alternating from side to side in 5 ft-lbs [7 N•m] increments to a final torque of 12 to 15 ft-lbs [16 to 20 N•m].

Digitized by Google

g. Check the belt tension.

Final belt tension was not obtained by adjustment alone. The water pump body was pulled straight by snugging the capscrews in the order described, thus increasing the belt tension to the final value.

2. Adjustable (split) pulley water pumps, V-903 Engines only.

   a. Remove the capscrews joining the sheave(s) of the pulley.

Note: Clean the capscrew threads and holes in the sheaves thoroughly to avoid capscrew breakage during reassembly.

   b. The outer half of the pulley is screwed onto the hub extension of the inner half. Some pulleys are provided with flats, and some with lugs for barring.

   c. Bar the engine over to roll the belt outward on the pulley as the outer half is turned in.

   d. Adjust the belt(s) to the tension indicated in Table 2-1.

   e. Turn the outer sheave(s) in enough to align the capscrew holes.

   f. Start the capscrews and tighten alternately and evenly. Final tension is:

      5/16-18 capscrew, 10 to 12 ft-lbs [14 to 16 N•m]
      3/8-16 capscrew, 17 to 19 ft-lbs [23 to 26 N•m]

   g. Bar the engine over one or two revolutions to seat the belt.

   h. Recheck the belt tension.

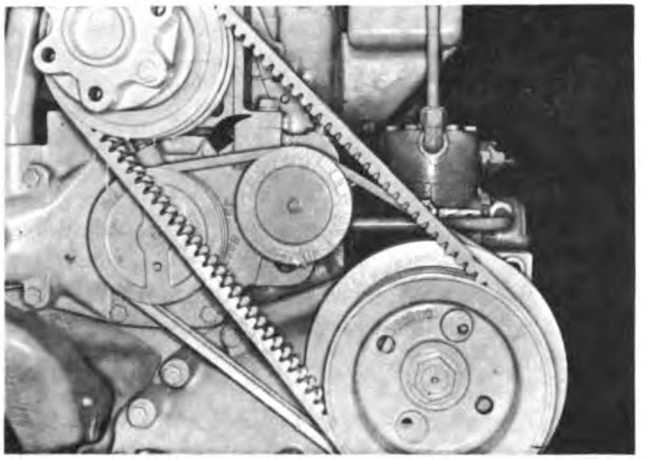

Fig. 2-4, (N11974). Water pump — with idler

Inline Engine Water Pump Belts (With Idler)

1. Loosen the capscrews and lockwashers or locknut securing the idler pulley to the bracket or water pump. Fig. 2-4.
2. Using a pry bar (NTA) or adjusting screw (FFC) adjust the idler pulley until the proper belt tension is indicated on the gauge. See Table 2-1.
3. Secure the idler pulley or bracket in position by tightening the locknut or capscrews and lockwashers to 45 to 55 ft-lbs [61 to 75 N•m] torque.

Note: The self tensioning idler on V-1710 belt driven water pumps requires no adjustment or belt tension check.

Fan Drive Belts

1. Loosen the large locking nut on the fan hub shaft or the capscrews securing the fan hub shaft to the mounting bracket. The fan hub will fall out of line when this is done.
2. Turn the adjusting screw to increase the belt tension.
3. Tighten the locknut or capscrews until the fan hub is straight. Snug the nut to maintain the hub in proper alignment with the fan hub bracket.

Caution: Do not adjust to full tension with the adjusting screw, as this would result in overtightening.

4. Belt tension should read as indicated in Table 2-1 on applicable gauge.
5. Tighten NH/NT Engines locknut to 400 to 450 ft-lbs [542 to 610 N•m]; then back off 1/2 turn. Tighten the four 1/2 inch capscrews, Fig. 2-5, on NTC-350 FFC Engines to 75 to 85 ft-lbs [101 to 115 N•m].

On V-903 Engines tighten capscrews to 75 ft-lbs [102 N•m] or single nut to 450 ft-lbs [610 N•m].

6. Recheck the belt tension.
7. Back out the adjusting screw one-half turn to prevent breakage.

Note: The self tensioning backside idler on KT/KTA-2300 and KTA-3067 belt driven fan requires no belt tension check.

Generator/Alternator Belts

Belt tension should be as indicated in Table 2-1 when measured with the applicable gauge.

Digitized by Google

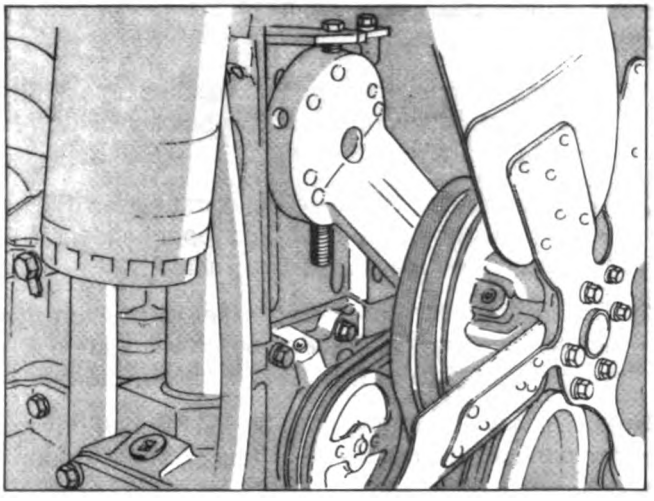

Fig. 2-5, (OM1016I). Fan hub installation, NTC-350 FFC

Belt Installation

If the belts show wear or fraying, replace as follows:

1. Always shorten the distance between the pulley centers so the belt can be installed without force. Never roll a belt over the pulley and never pry it on with a tool such as a screwdriver. Either of these methods will damage the belts and cause early failure.
2. Always replace the belts in complete sets. Belts riding depth should not vary over 1/16 in [1.6 mm] on matched belt sets.
3. Pulley misalignment must not exceed 1/16 in [1.6 mm] for each ft [0.3 m] of distance between the pulley centers.
4. Belts should not bottom on the pulley grooves nor should they protrude over 3/32 in [2.4 mm] above the top edge of the groove.
5. Do not allow belts to rub any adjacent parts
6. Adjust belts to the proper tension.

Readjusting New Belts

All new belts will loosen after running for 5 minutes and must be readjusted to "belt tension after run-in" Ref. Table 2-1.

Check Oil Bath Cleaner Oil Level

Daily check oil level, Fig. 2-6, in the oil bath air cleaner to be sure the oil level in the cup is at the indicated mark. Refill as required.

***Cummins Engine Company, Inc. recommends the use of dry type air cleaners.**

Check for Damage

Visually check the fuel system, etc., for misadjustment or tampering; check all connections for leaks or damage. Check the engine for damage; correct as necessary.

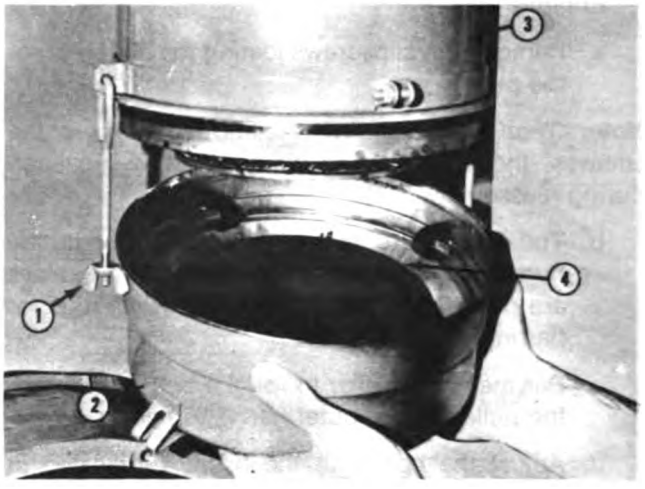

Fig. 2-6, (N11001). Checking oil level in air cleaner

Digitized by Google

"A" Maintenance Checks—Weekly

Repeat Daily Checks

Check Air Cleaner

Clean Pre-Cleaner and Dust Pan

Under extremely dirty conditions an air pre-cleaner may be used. Clean the pre-cleaner jar and dry-type air cleaner dust pans daily or more often, as necessary, depending on operating conditions.

Check Inlet Air Restriction

Mechanical Indicator

A mechanical restriction indicator is available to indicate excessive air restriction through a dry-type air cleaner. This instrument can be mounted in the air cleaner outlet or on the vehicle instrument panel. The red flag (1, Fig. 2-7) in the window gradually rises as the cartridge loads with dirt. After changing or replacing the cartridge, reset the indicator by pushing the reset button (2).

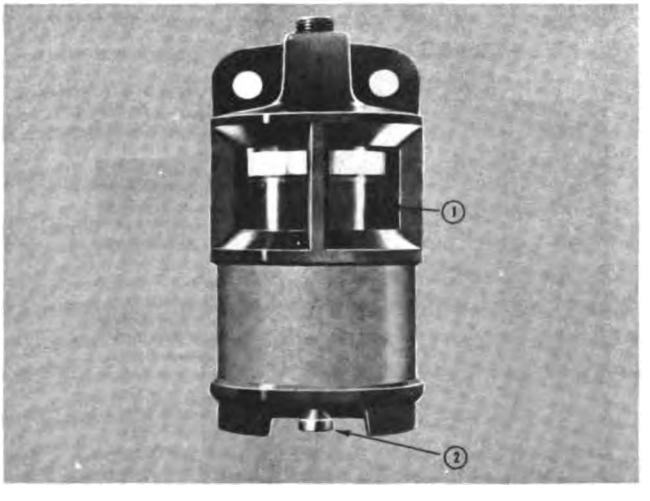

Fig. 2-7, (CGS-20). Air inlet restriction indicator

Note: Never remove the felt washer from the indicator. It is necessary to absorb moisture.

Vacuum Indicator

Vacuum switches, Fig. 2-8, are available which actuate a warning light on the instrument panel when the air restriction becomes excessive.

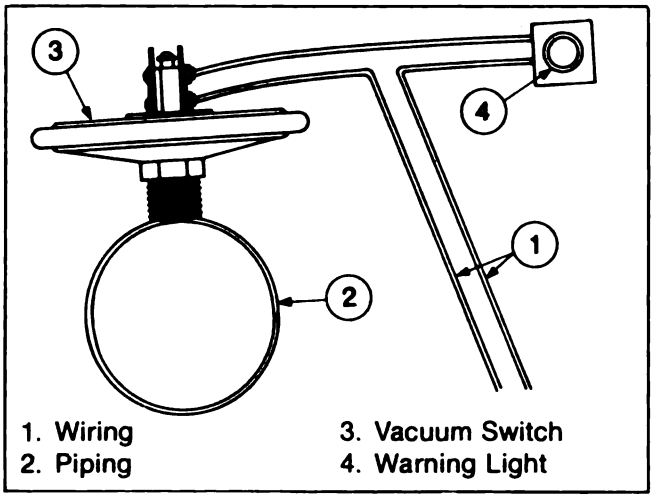

Fig. 2-8, (N21905). Vacuum switch to check air inlet

1. Air restriction on turbocharged engines must not exceed 25 inches [635 mm] of water or 1.8 inches [46 mm] of mercury under full power conditions.
2. Naturally aspirated engine air restriction must not exceed 20 inches [508 mm] of water or 1.5 inches [38 mm] of mercury at air intake manifold at rated speed.

Clean or Replace Air Cleaner Elements

The paper element in a dry-type air cleaner, Fig's. 2-9, 2-10, 2-11 and 2-12, may be cleaned several times by using air to blow off dirt or by washing with nonsudsing household detergent and water at 120 to 140°F [49 to 60°C], then drying with compressed air, approximately 30 psi [306 kPa]. Do not hold the air jet too close to the paper element.

Elements that have been cleaned several times will finally clog and air flow to the engine will be restricted. After cleaning, check the restriction as previously described and replace the element if necessary.

Caution: Holes, loose end seals, dented sealing surfaces and other forms of damage render the cleaner inoperative and require immediate element replacement.

To change the element:

1. Loosen the wing nut (1, Fig. 2-9) securing the

Digitized by Google

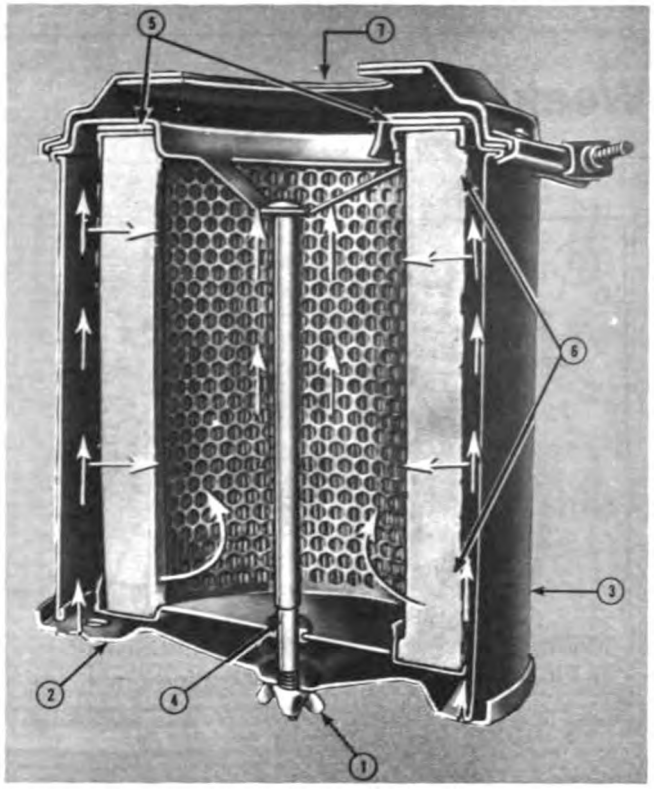

Fig. 2-9, (OM1028L). Air cleaner—dry type

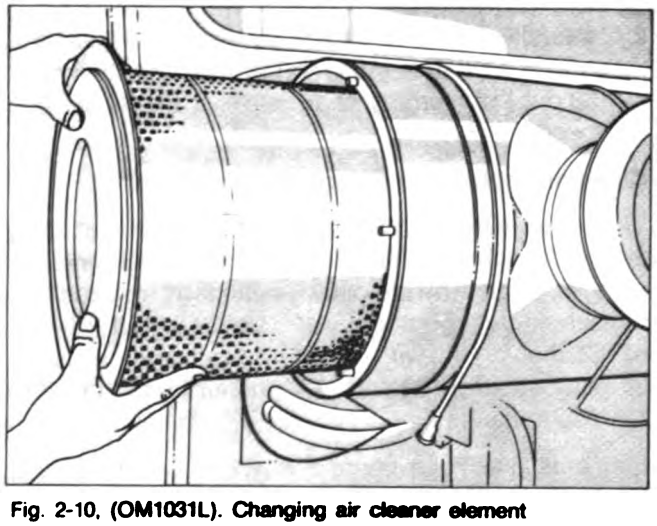

Fig. 2-10, (OM1031L). Changing air cleaner element

bottom cover (2) to the cleaner housing (3). Remove the cover.

2. Pull the element (6) down from the center bolt (4).

Caution: Pull the cover and the element straight out when removing them from the housing, Fig. 2-10, to avoid damage to the element.

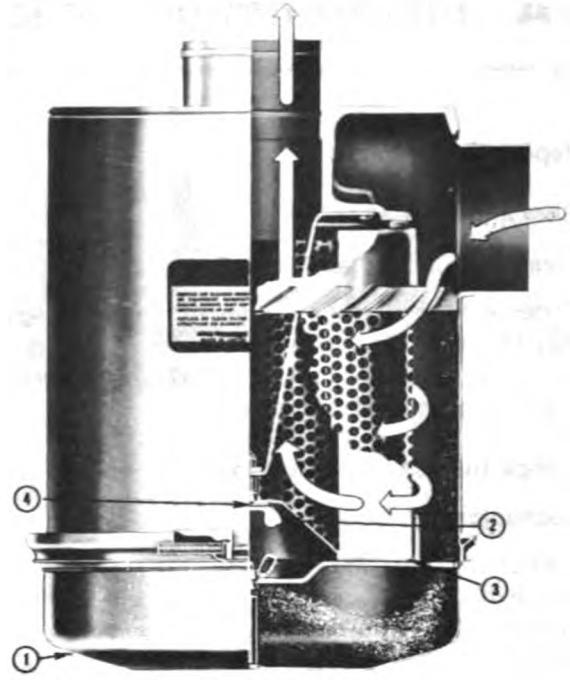

Fig. 2-11, (OM1029L). Air cleaner—heavy duty

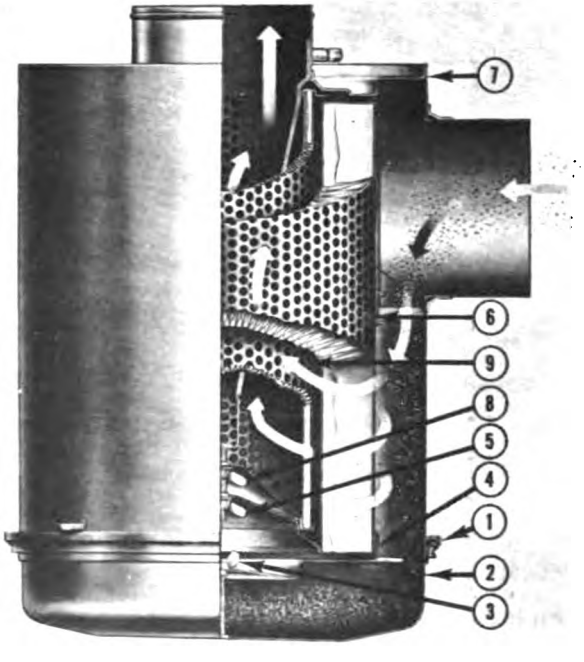

Fig. 2-12, (OM1030L). Air cleaner—heavy duty dual element

Digitized by Google

3. Remove the gasket (5) from the outlet end (7) of the housing.

When installing the element, make sure it seats on the gasket at the air cleaner outlet end.

Heavy Duty Dry-Type Air Cleaners

Heavy duty air cleaners (single and dual types) combine centrifugal cleaning with element filtering, Fig's. 2-11 and 2-12, before air enters the engines.

Before disassembly, wipe dirt from the cover and the upper portion of the air cleaner. To clean single or dual types:

1. Loosen the wing bolt, remove the band securing the dust pan (1, Fig. 2-11), (2, Fig. 2-12).
2. Loosen the wing nut (2, Fig. 2-11 and 3, Fig. 2-12), remove the dust shield (3, Fig. 2-11), (4, Fig. 2-12), from the dust pan (1, Fig. 2-11), (2, Fig. 2-12), clean the dust pan and shield.
3. Remove the wing nut (2, Fig. 2-11), (5, Fig. 2-12) securing the air cleaner primary element (6, Fig. 2-12) in the air cleaner housing, inspect the rubber sealing washer on the wing nut (4, Fig. 2-11), (5, Fig. 2-12).
4. Blow out the element from the clean air side with compessed air not exceeding 30 psi [207 kPa].
5. Wash the element with nonsudsing household detergent and water, 120 to 140° F [49 to 60° C]. Dry with compressed air, 30 psi [207 kPa].
6. Inspect the element after cleaning.
7. Install a new or the cleaned primary element.
8. Be sure the gasket washer is in place under the wing nut before tightening.
9. Reassemble the dust shield and dust pan, position them to the air cleaner housing and secure with the band.
10. On the dual element type Cyclopac cleaner:
    a. Check the air restriction indicator. If the air restriction is excessive, disassemble the air cleaner, remove the wing nut (8, Fig. 2-12), and replace the safety element (9).
    b. Reassemble the air cleaner as described in "Steps 8 and 9" above.

Cartridge Type Air Cleaner Element

1. Loosen the wing nuts (4, Fig. 2-13 or 2-14) on the air cleaner housing (5) to remove the pre-cleaner panel with the dust bin (1). To remove the pre-cleaner panel (2) equipped wth an exhaust aspirator loosen the "U" bolt clamp securing the pre-cleaner to the aspirator tubing.
2. Remove the dirty Pamic cartridge (3), by inserting your fingers in the cartridge opening (loosen all four corners of the cartridge, one at a time) and pulling it straight out.

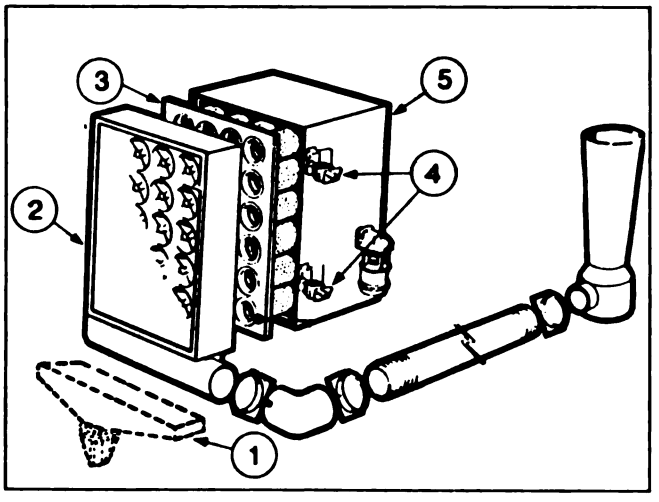

Fig. 2-13, (N21026). Air cleaner — cartridge type (two stage)

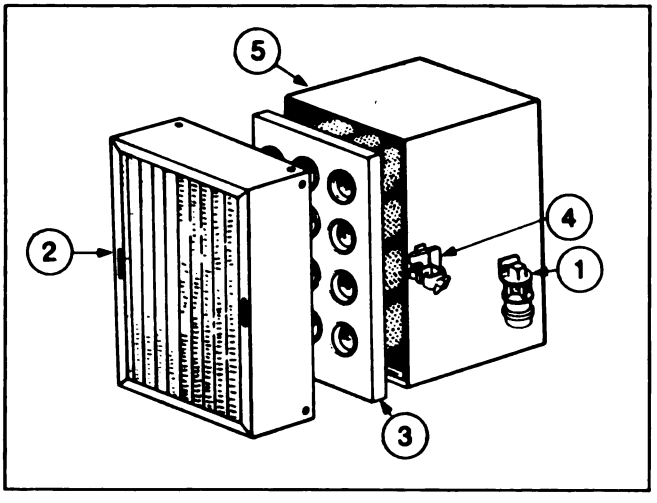

Fig. 2-14, (V11009). Air cleaner — cartridge type (single stage)

With the larger cartridge, it may be necessary to break the seal along the edges of the cartridge. After the seal has been broken, pull the cartridge straight out and slightly up so the cartridge will clear the sealing frame and edges of the air cleaner housing.

Cleaning and Inspection

1. Clean the pre-cleaner openings (2) of all soot, oil film and any other objects that may have become lodged in the openings. Remove any dust or dirt in

Digitized by Google

the lower portion of the pre-cleaner and aspirator tubing. Inspect the inside of the air cleaner housing for foreign material.

2. Inspect the dirty cartridge for soot or oil. If there is soot inside the Pamic tubes, check for leaks in the engine exhaust system, exhaust "blow-back" into the air intake and exhaust from other equipment. If the cartridge appears "oily", check for fumes escaping from the crankcase breather. Excessive oil mist shortens the life of any dry-type cartridge. Troubleshooting at this point can appreciably lengthen new cartridge life.
3. It is not recommended to clean and reuse the cartridge. When returned to service, life expectancy of a paper cartridge will be only a fraction of the original service life.
4. Inspect clamps and flexible hose or tubing to be sure all fittings are air tight on cleaners with exhaust aspirators.
5. The pre-cleaner dust bin is self-cleaning.

Assembly

1. Inspect the new filter cartridge for shipping damage before installing.
2. To install a new cartridge, hold the cartridge (3, Fig. 2-13 and 2-14) in the same manner as when removing it from the housing. Insert the clean cartridge into the housing; avoid hitting the cartridge tubes against the sealing flange on the edges of the air cleaner housing.
3. The cleaner requires no separate gaskets for seals; therefore, care must be taken inserting cartridge to insure a proper seat within the cleaner housing. Firmly press all edges and corners of the cartridge with your fingers to effect a positive air seal against the sealing flange of the housing. Under no circumstances should the cartridge be pounded or pressed in the center to effect a seal.
4. Replace the pre-cleaner panel (2) and tighten the wing nuts (4) by hand, for final tightness turn 1-1/2 to 2 turns with a small adjustable wrench. Do not overtighten. On a pre-cleaner with an exhaust aspirator, assemble the aspirator tube to the pre-cleaner panel and tighten the "U" bolt.
5. Care should be taken to keep the cleaner face unobstructed.

Change Oil Bath Air Cleaner Oil

Before dirt build-up reaches 1/2 inch [12.7 mm], remove the oil cup from the cleaner. Discard the oil and wash the cup in cleaning solvent or fuel oil.

Note: During wet weather and in winter months, changing of the oil is equally as important as during dusty weather since the air cleaner inlet may be located in an air stream which carries moisture into the cleaner.

Fill the oil cup to the level indicated by the bead on the side with clean, fresh oil of the same grade as that in the crankcase and assemble it to the cleaner. In extremely cold weather a lighter grade may be necessary. A straight mineral, non-foaming detergent, or non-foaming additive oil may be used in oil bath air cleaners.

Caution: Never use dirty oil or used oil.

Drain Air Tanks

In cold weather, condensed moisture in the air tanks and lines may freeze and make controls useless.

Drain the air tanks to keep all water out of the compressed air system.

Drain Sediment from Fuel Tanks

Loosen the fuel tank drain cock or plug, if used, and drain approximately 1 cup of fuel to remove water and sediment. Close the drain cock or plug.

Fuel/Water Filter Separator

If more moisture than usual is present when checking the fuel tanks, it may be advisable to install a water separator.

Contact the nearest Cummins Dealer for a Fleetguard water separator that meets requirements.

Drain plugs are located in the bottom of some fuel filter cases and in the sump of some fuel supply tanks. More condensation of water vapor occurs in a partially filled fuel tank than in a full one. Therefore, fuel supply tanks should be kept as nearly full as possible. Warm returning fuel from the injectors heats the fuel in the supply tank. If the fuel level is low in cold weather, the fact that the upper portion of the tank is not being heated by returning fuel tends to increase condensation. In warm weather both the supply tank and the fuel are warm. In the night, however, cool air lowers the temperature of the tank much more rapidly than the temperature of the fuel. Again this tends to increase condensation.

Engine Front Trunnion

If used, the engine front trunnion mount should be lubricated with grease meeting specifications as outlined in Section 3.

Digitized by Google

"B" Maintenance Checks

B-Check

At each "B" Maintenance Check, perform all the "A" Checks in addition to the following.

Lubricating Oil Change Intervals

Note: If the lubricating oil is drained from the oil pan to make an engine repair, new oil must be used. Do not use oil after it has been drained from the oil pan.

Maintaining a proper "B" maintenance check interval is a very important factor in preserving the integrity of an engine. Lubricating oil contamination is the direct result of engine operation and the load factor involved. The amount of contamination generated depends on the amount of fuel the engine consumes. Laboratory and field tests have determined that, when using the recommended quality oils and filters, a turbocharged engine in good condition and equipped with a bypass oil filter can consume 255 gallons of fuel for each gallon of oil in the oil system before the maximum level of oil contamination is reached. Based on these findings, Cummins Engine Company, Inc., recommends that the "B" check interval be determined by the use of the "Chart Method". At each "B" check interval it is recommended to change the full-flow filter and the bypass filter.

The total lubricating system capacity in gallons can be determined by adding the high level of the lubricating oil in the oil pan and the capacities of the full-flow and bypass filters. All lubricating oil systems must be rounded to the nearest gallon when applied to the chart. Table 2-2 lists the capacities of the full-flow and bypass filter elements.

Chart Method

From laboratory and field tests we know that the maximum contamination level for a gallon of oil is reached when 255 gallons of fuel is consumed in a turbocharged engine or 280 gallons of fuel in a naturally aspirated engine. The 255 or 280 figure is the constant used in the equation for the oil change period.

The following illustration is how to use the chart method to determine the recommended oil change interval:

Table 2-2: Lubricating Oil Filter Elements

Description of Filter (Element P/N)	Capacity (Gals.)	Engine Family
Full-flow (LF516)	0.93	All Engines (except V-378 and V-504)
Full-flow (LF613)	0.83	V-378 & V-504 Only
Full-flow spin-on (LF670)	0.80	All Engines (Optional on V-555)
Full-flow (spin-on short) (LF670-SC)	0.65	Standard on All Small Vee
Bypass, 750 in³ (LF750-A)	2.91	All Engines (Except Small Vee)
Bypass, 750 in³ (LF750-C)	2.91	All Engines (Except Small Vee)
Bypass, 750 in³ (LF750)	2.91	All Engines (Except Small Vee)
Bypass, 500 in³ (LF500)	2.25	Small Vee Only
Bypass, spin-on (LF777)	0.70	C & I Engines and Small Vee
Full-flow spin-on (LF734)	0.50	Standard on All Small Vee (Will replace LF670-SC)

Assume a VT-1710 engine which has the following capacities:

Lubricating Oil Pan Capacity	=	18 gallons
Full-Flow Filter (3)	=	2.79 gallons
Bypass Filter 750 in³ (2)	=	5.82 gallons
Total Lubricating Oil System Capacity	=	26.61-27 gallons

Round this capacity to the nearest whole gallon and select the chart entitled "Off Highway Turbocharged with By-Pass Filter" "Lube System Capacity-27 gallons."

Also assume the average fuel consumption = 17.5 gallons per hour and the average oil consumption = 8 hours per quart.

To read the chart.

Digitized by Google

Change Period = Constant x fuel consumed x the oil available.

Oil Available = Oil system capacity + one-half the make-up oil added in a given period.

Oil Added = $\frac{\text{Change Interval}}{\text{Oil Consumption Rate}}$

Change Period = The Constant x the fuel consumed x [the system capacity + one-half $\frac{\text{(the Change Period)}}{\text{(Oil Consump. Rate)}}$

Solving this equation for the oil change period gives the equation which is used in developing the Chart Method.

Change Period = $\frac{\text{Constant x fuel consumed x oil consumption x system capacity}}{\text{Oil consumption — one-half (constant x fuel consumed)}}$

1. The numbers along the left side of the chart represent fuel consumption in gallons per hour. Divide the grid between "10" and "20" in 10 equal parts to find the point for fuel consumption.
2. Beginning at "17.5" (fuel consumption), draw a line from left to right to the curve "8". This curve represents oil consumption at the rate of 8 hours per quart.
3. From the point on the curve "8", draw a line perpendicular to the bottom of the chart. The numbers across the bottom of the chart represent the oil change interval in hours.
4. The perpendicular line from the curve "8" intersects the bottom line of the chart between "500" and "600". Divide the grid in 5 equal parts to find the point for the recommended oil change interval. In this example the recommended oil change interval is 505 hours.

Since it is not practical with a group of engines to use a different oil change interval for each engine based on the chart method, Cummins recommends that you use the chart method in the following manner:

1. Divide the engines into groups by engine model (engines with the same lube system capacity).

2a. Determine the average fuel consumption for all the engines in each group.

b. Select a group fuel consumption, for entering the chart, that is halfway between the average fuel consumption and the highest fuel consumption in the group.

3a. Determine the average lube oil consumption for all the engines in the group.

b. Select a group lube oil consumption for entering the chart that is halfway between the average lube oil consumption and the lowest oil consumption in the group.

4. Read the appropriate chart for each group using the fuel consumption determined in 2b and the lube oil consumption determined in 3b. The oil change interval determined in this manner should be applied to the entire group.
5. Since some will have more than one group of engine models, a change interval should be determined for each group. In some cases it may be wise to divide some groups into sub-groups (such as older NTC-290's and newer Formula 290's) for which a change interval is determined.
6. Practically, now, a manager must review the oil change intervals determined for each group or

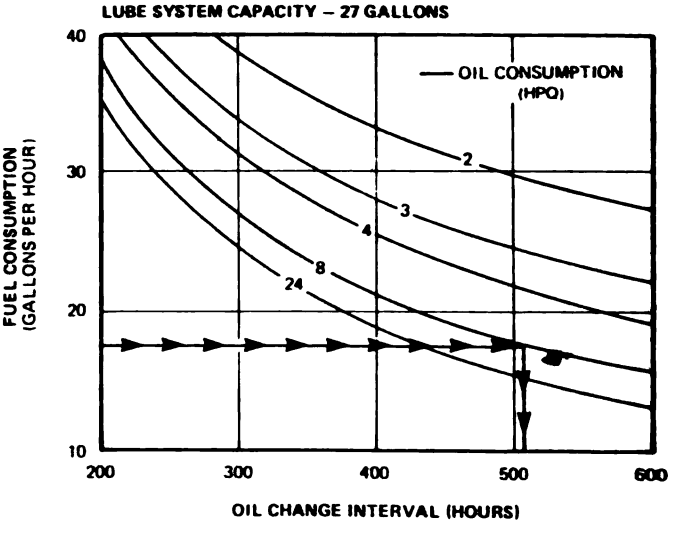

Digitized by Google

subgroup; consider the other items in his preventative maintenance schedule; consider his own past practice; and select an oil change interval which he feels is the best compromise.

Note: Cummins Engine Co., Inc., does not recommend exceeding 25,000 miles and/or 600 hours on oil change intervals. Therefore, the charts or limited to 25,000 miles or 600 hours and must not be extended.

The charts for determining the recommended oil change intervals are included in the following pages.

Chart Method Alternative

As an alternative to the Chart Method for determining the "B" maintenance check interval, Cummins Engine Co., Inc., recommends that the "B" check be performed every 10,000 miles, 250 hours or 6 months.

Note: Perform the "B" check in 6 month intervals for engiens in emergency or standby operations and any other operation where less than the recommended miles or hours have been accumulated in a 6 month interval.

Digitized by Google

OFF HIGHWAY – NATURALLY ASPIRATED WITH BY-PASS FILTER

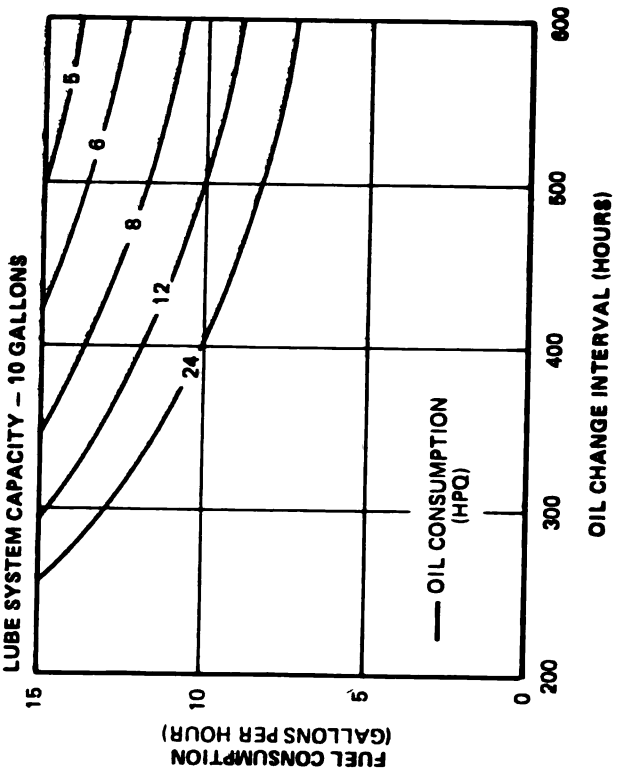

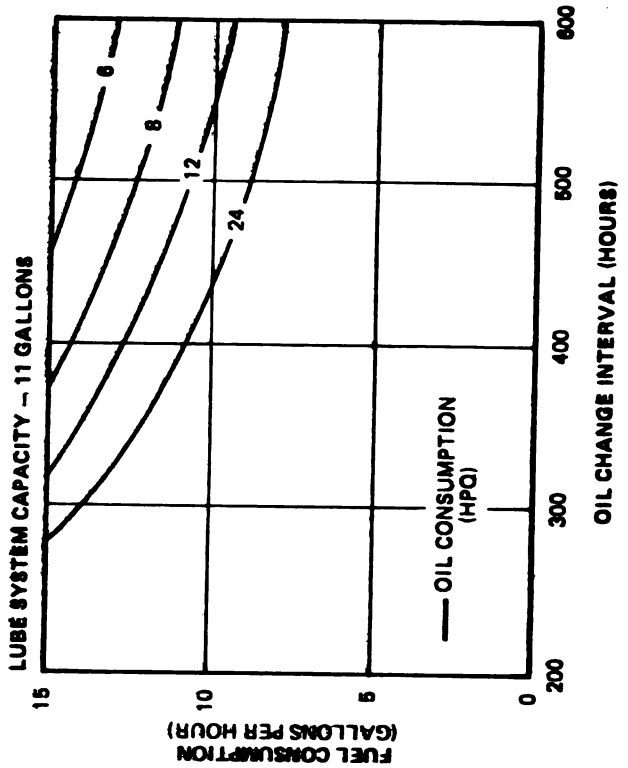

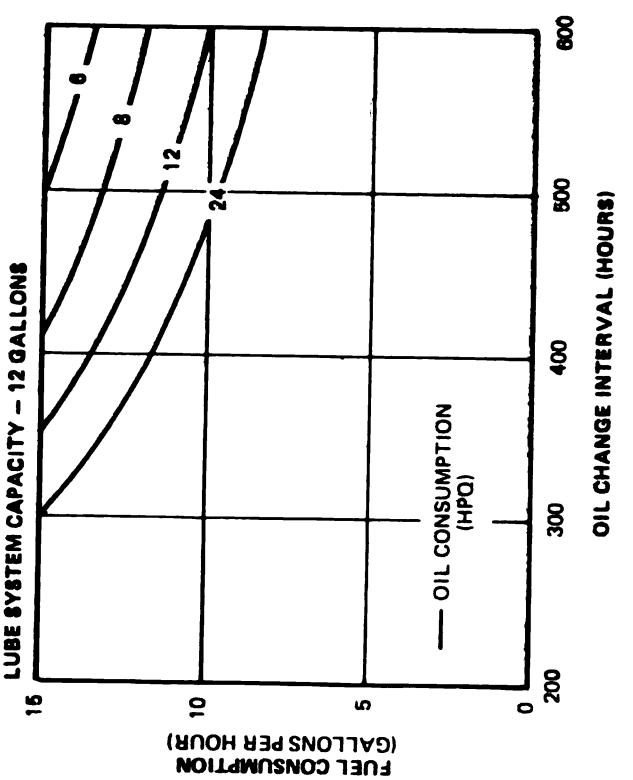

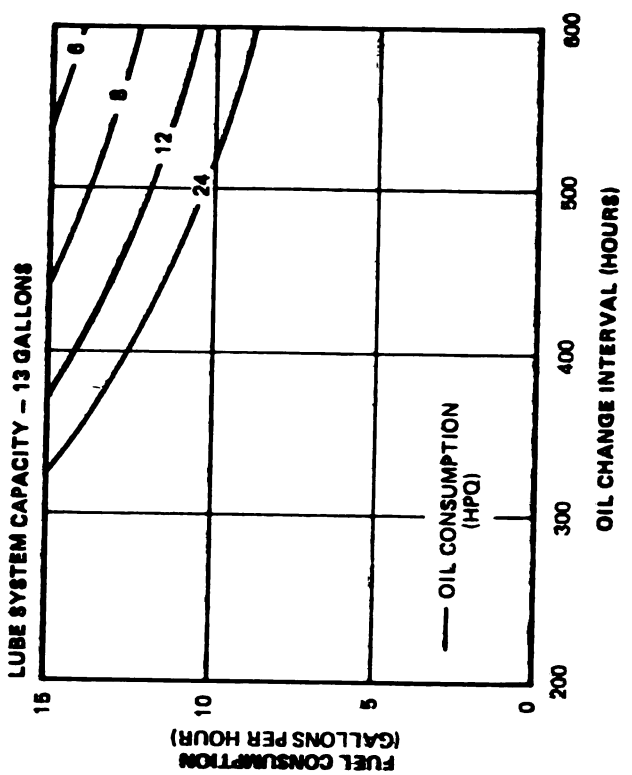

Digitized by Google

OFF HIGHWAY – NATURALLY ASPIRATED WITH BY-PASS FILTER

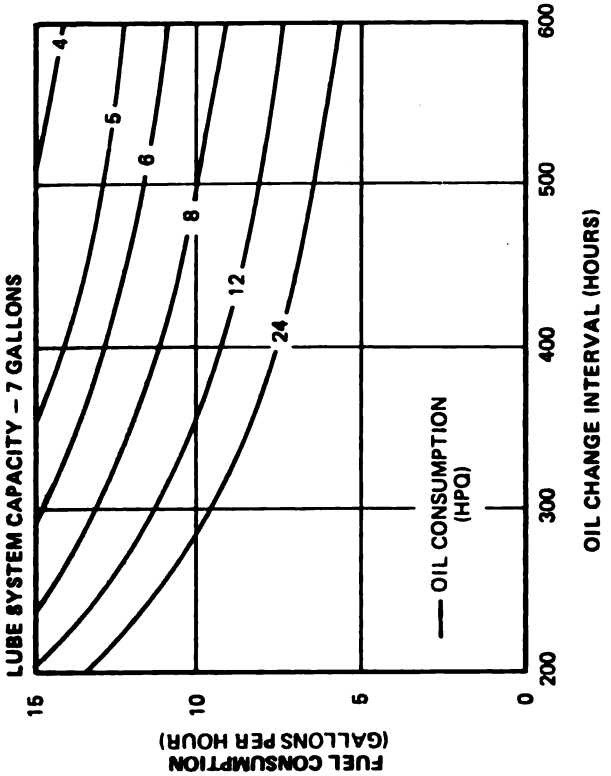

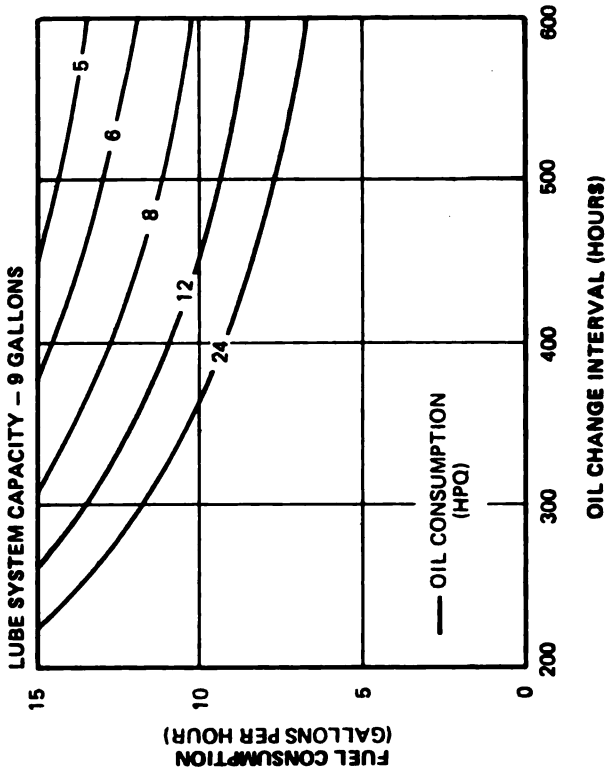

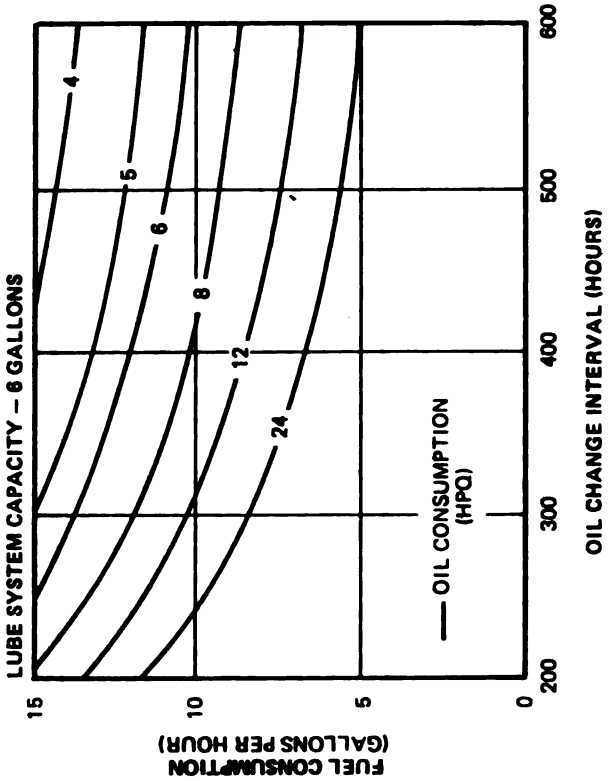

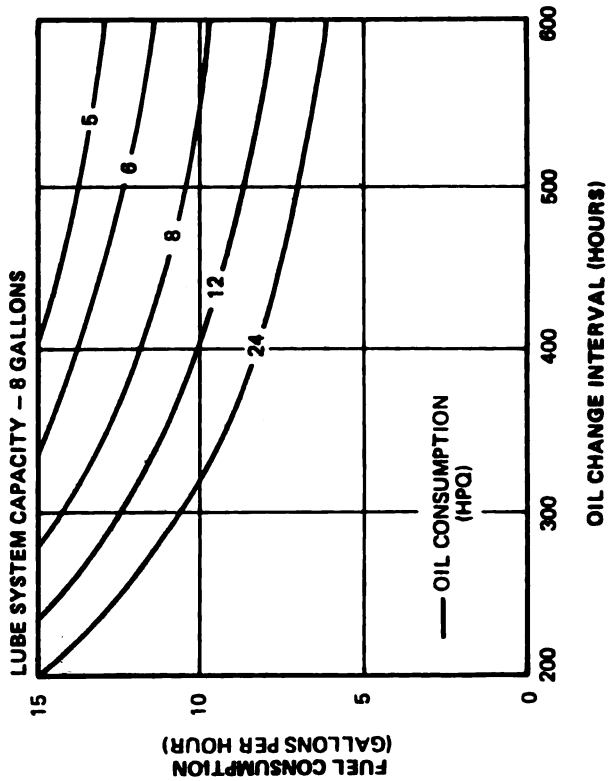

Digitized by Google

OFF HIGHWAY – TURBOCHARGED WITH BY-PASS FILTER

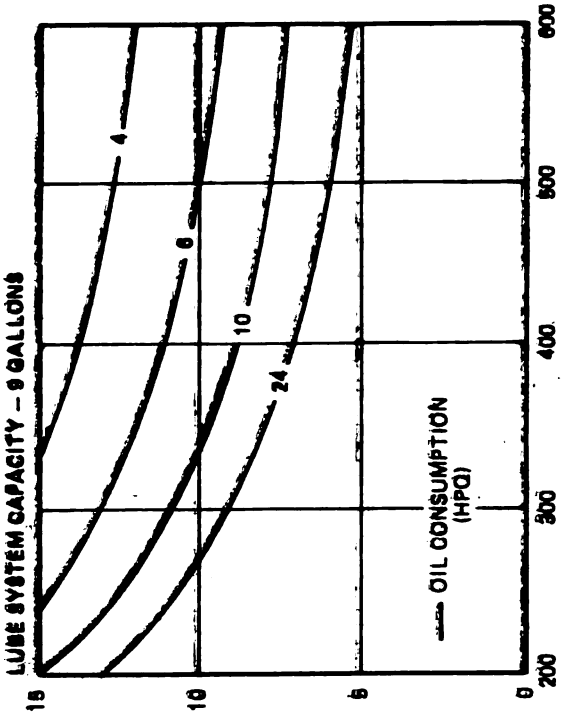

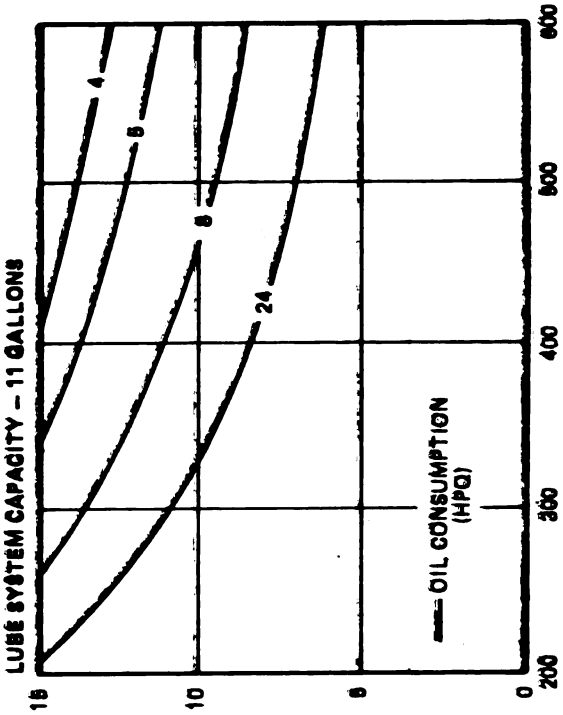

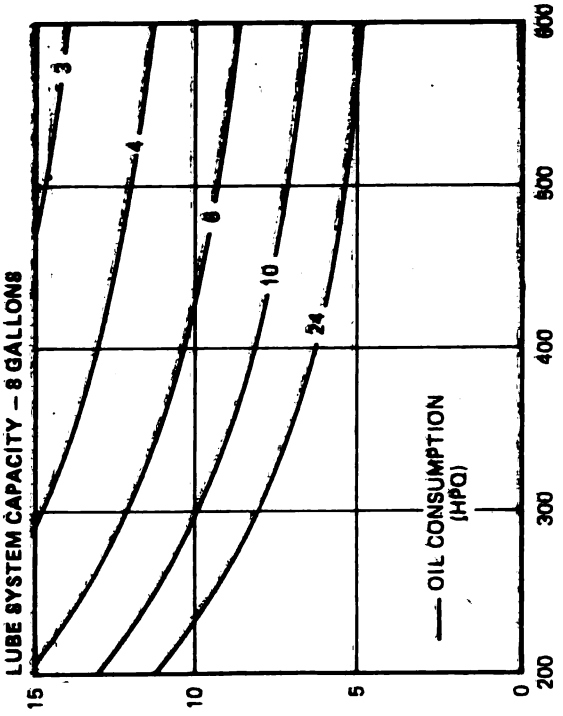

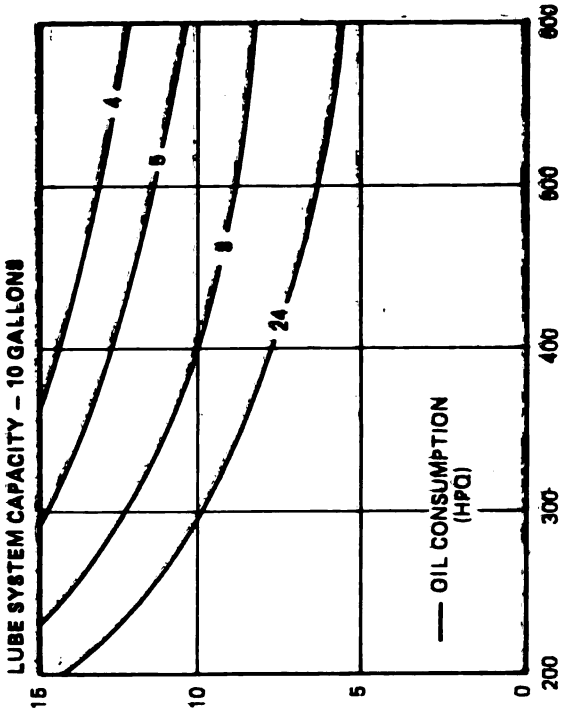

Digitized by Google

OFF HIGHWAY – TURBOCHARGED WITH BY-PASS FILTER

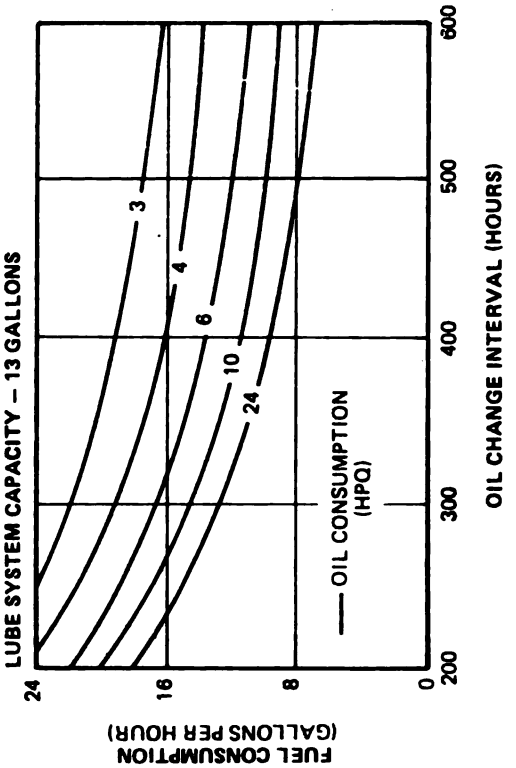

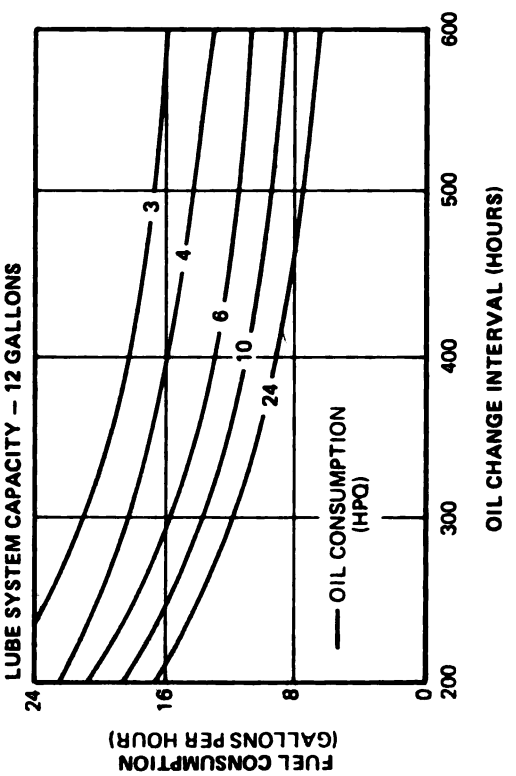

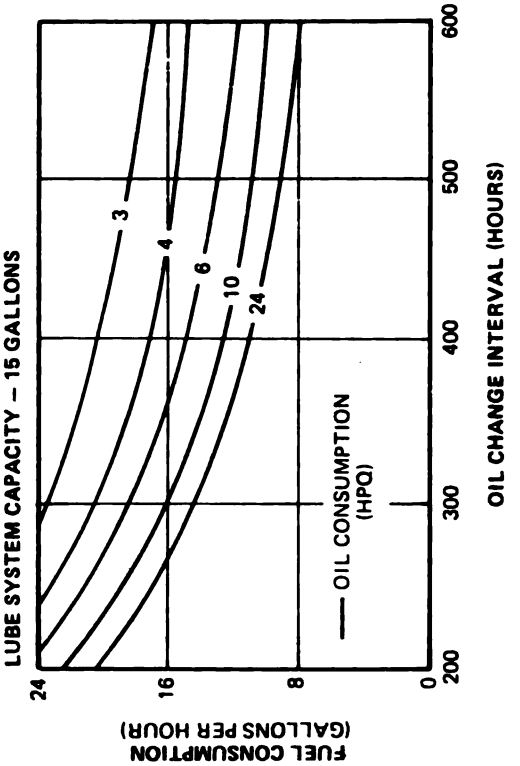

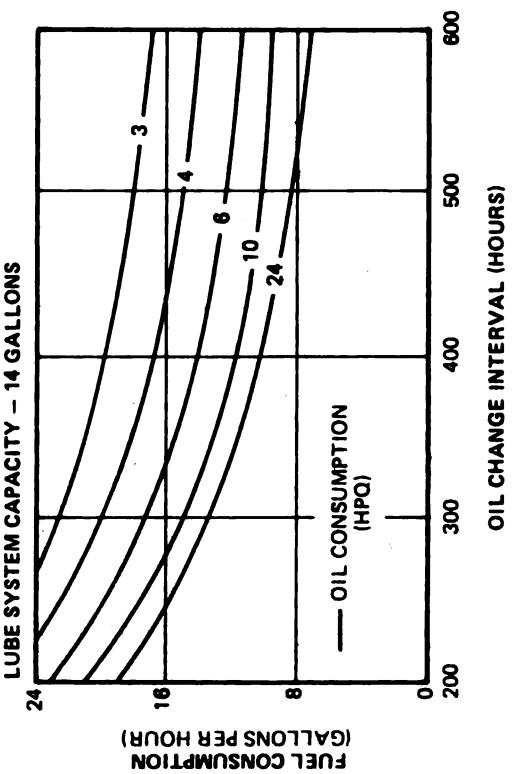

Digitized by Google

OFF HIGHWAY – TURBOCHARGED WITH BY-PASS FILTER

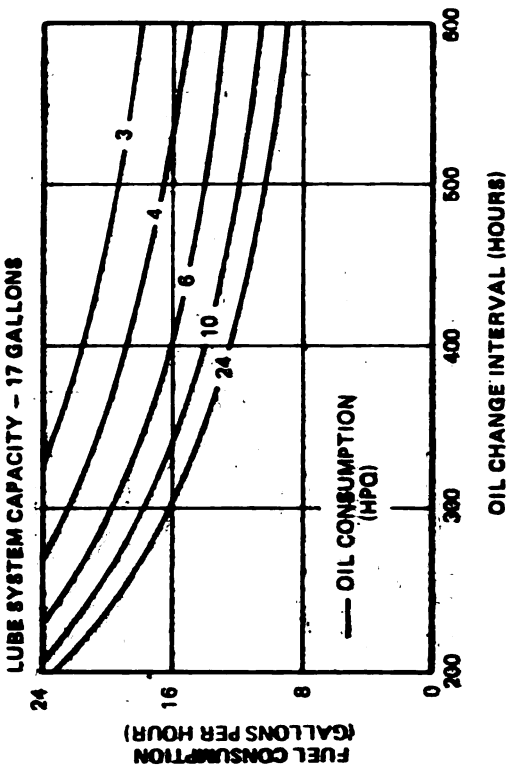

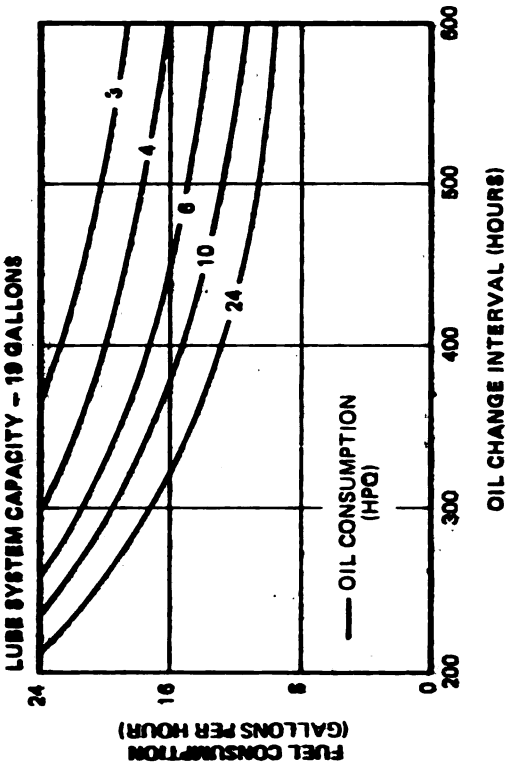

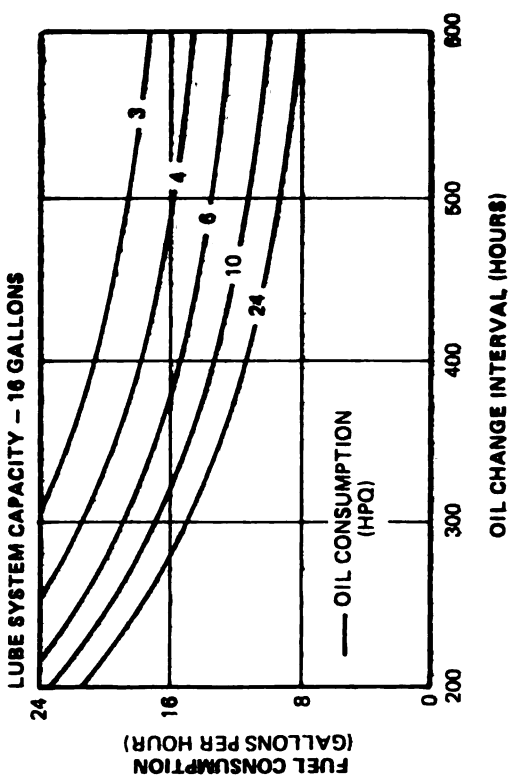

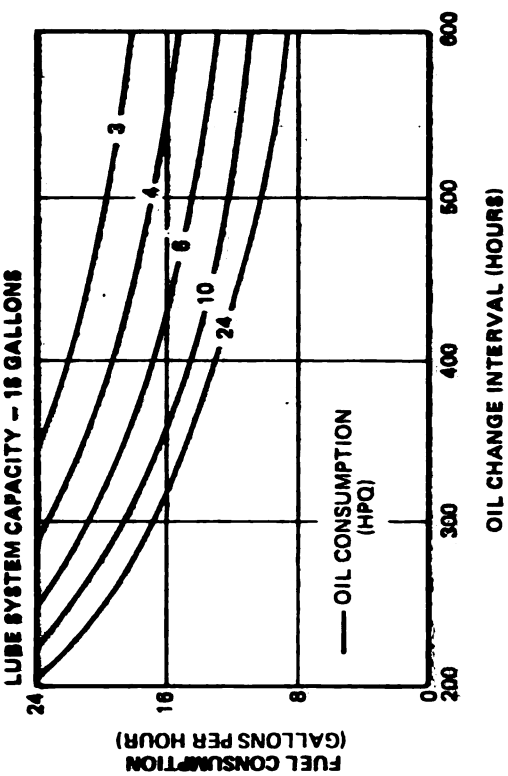

Digitized by Google

OFF HIGHWAY – TURBOCHARGED WITH BY-PASS FILTER

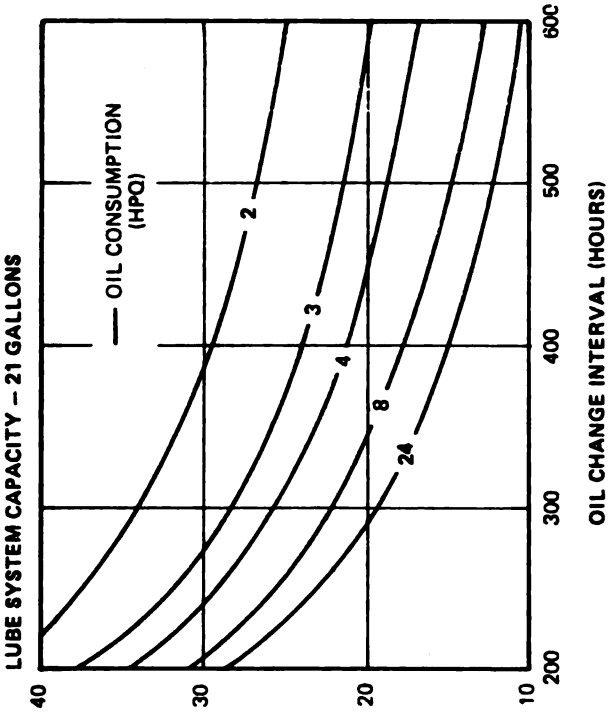

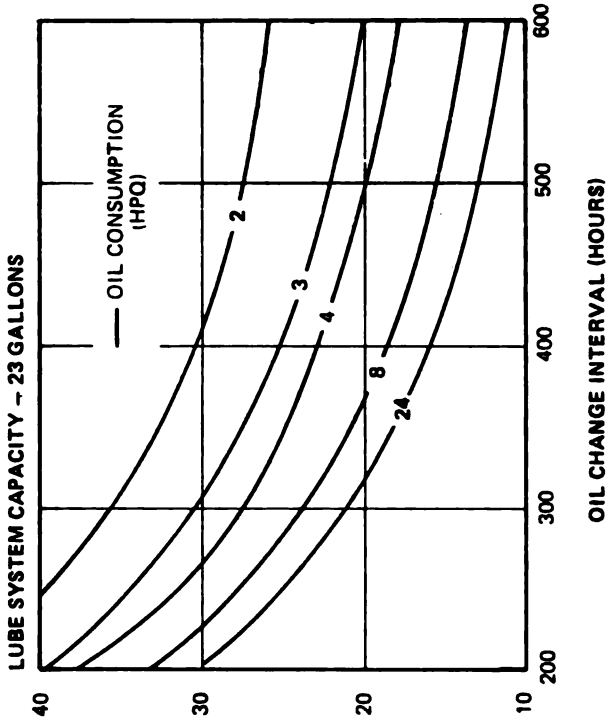

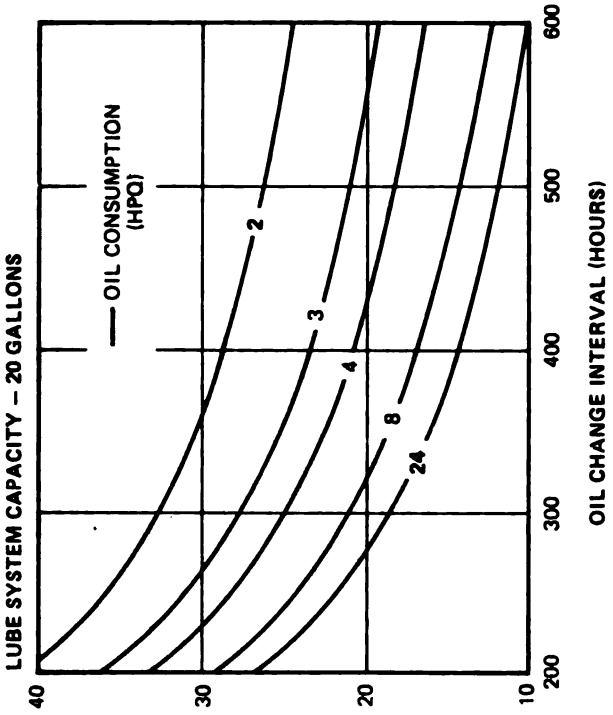

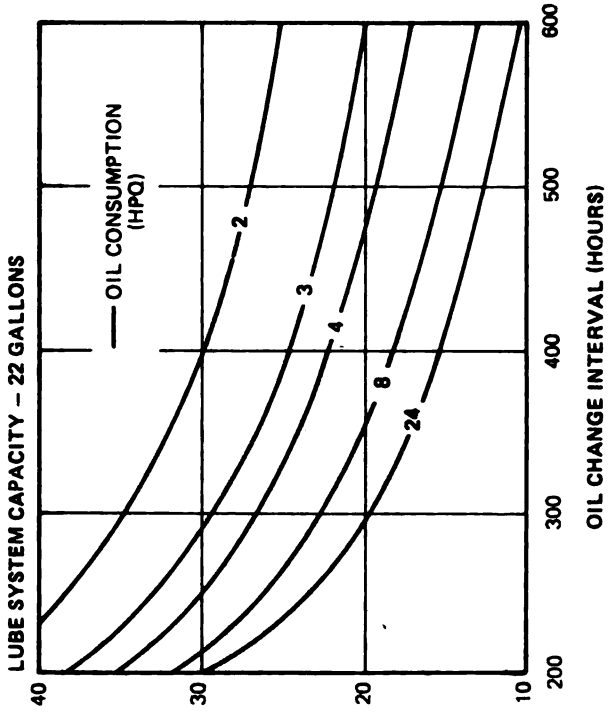

Digitized by Google

OFF HIGHWAY – TURBOCHARGED WITH BY-PASS FILTER

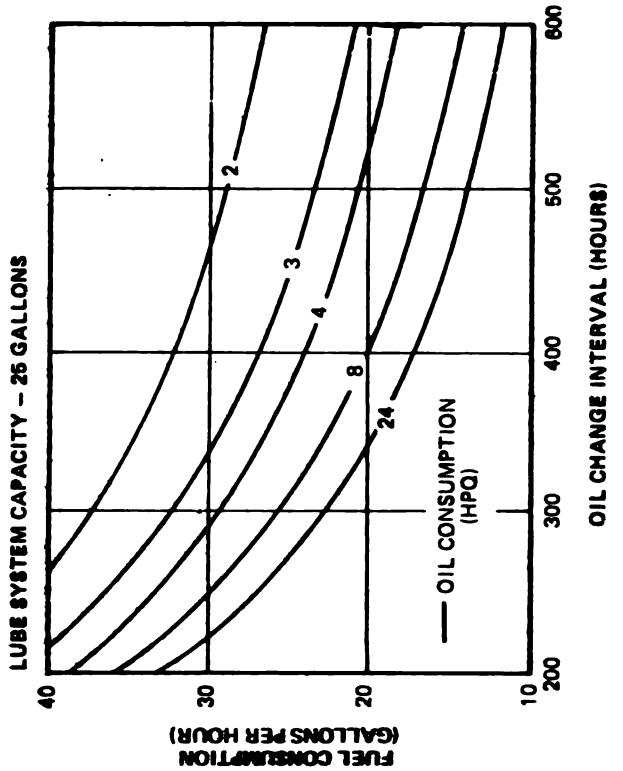

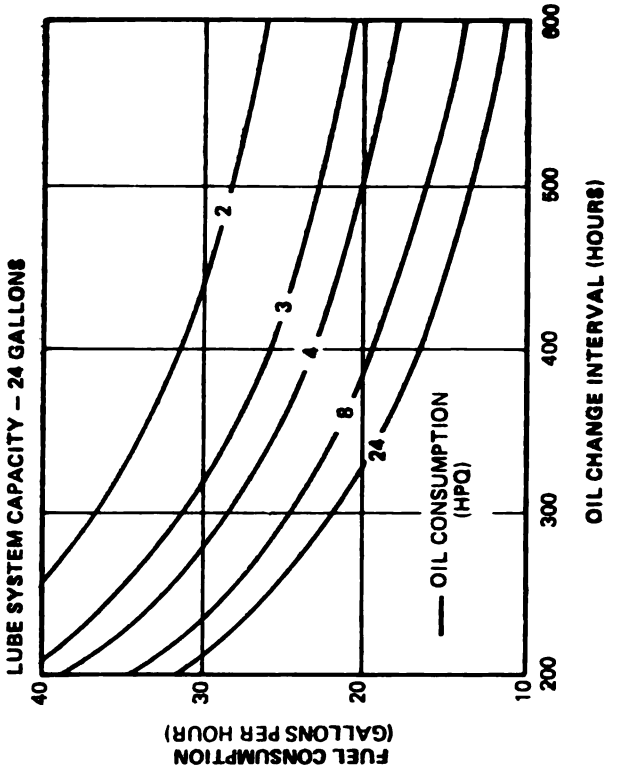

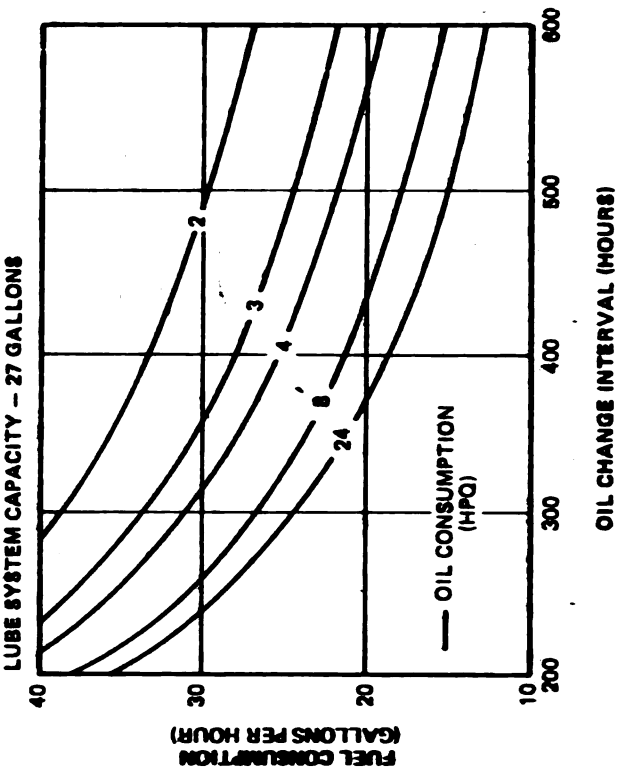

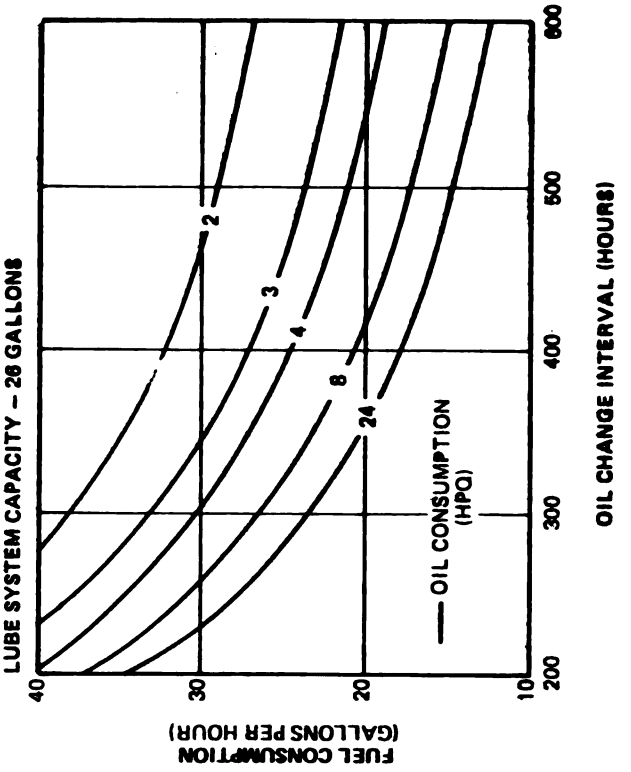

Digitized by Google

OFF HIGHWAY – TURBOCHARGED WITH BY-PASS FILTER

LUBE SYSTEM CAPACITY – 40 GALLONS

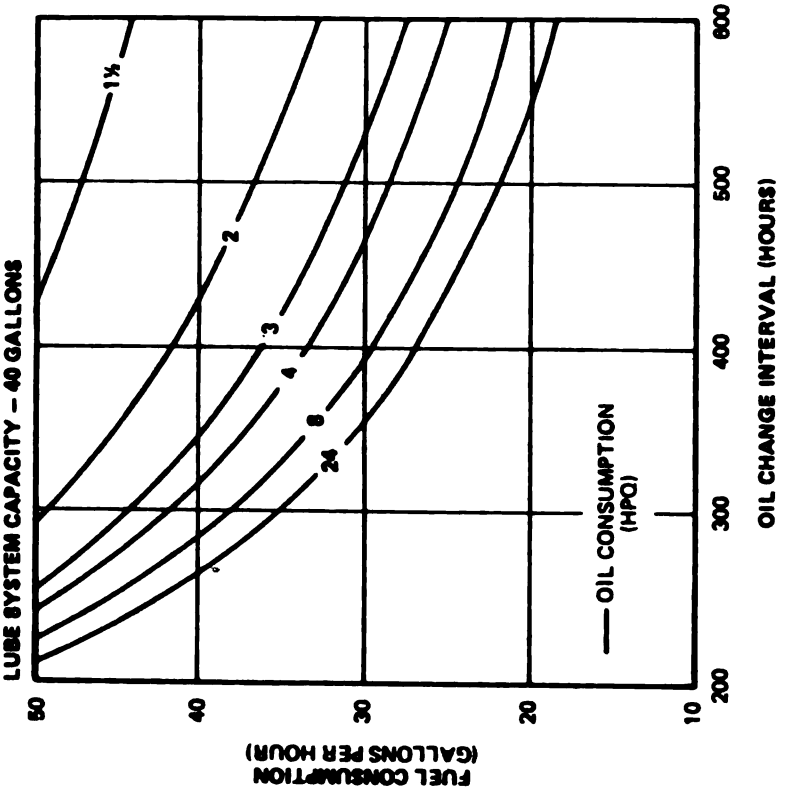

OFF HIGHWAY · TURBOCHARGED WITH BYPASS FILTER

LUBE SYSTEM CAPACITY · 51 GALLONS

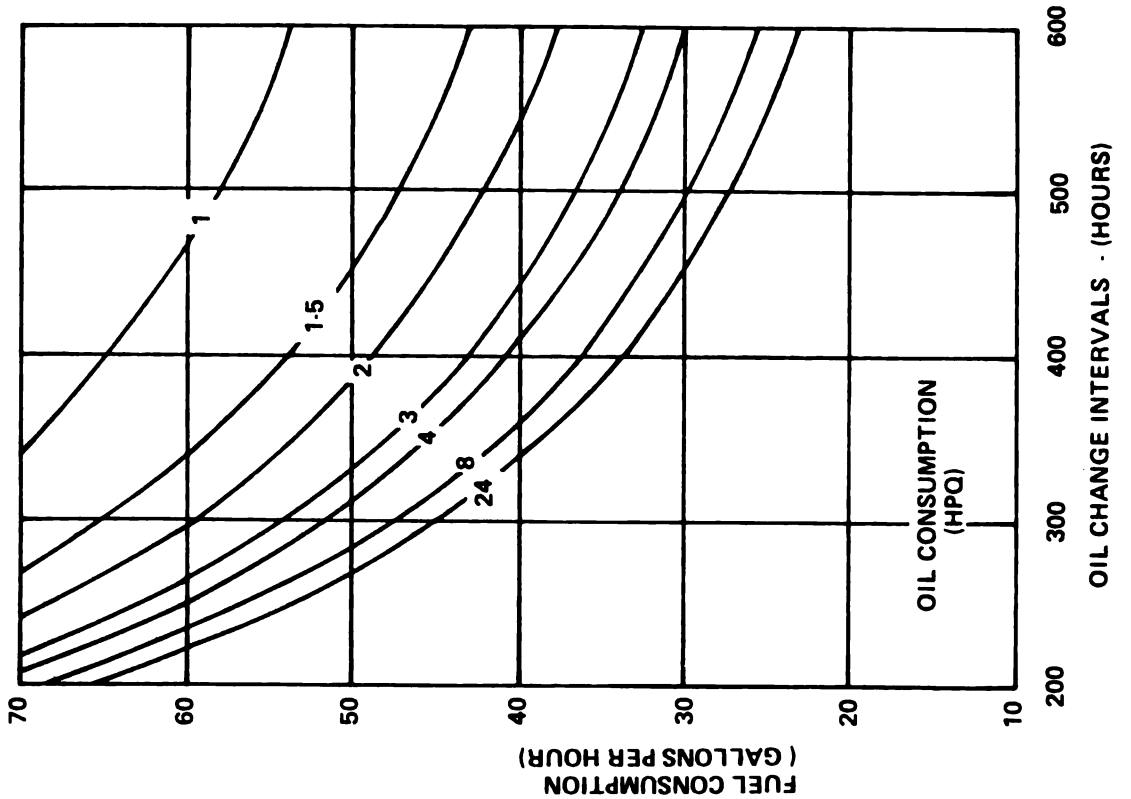

Digitized by Google

Lubricating Oil Analysis

An alternate method for determining when to change lubricating oil and filters is by used oil analysis using laboratory tests. The analyses used are for the purpose of determining the amount of contamination in the oil; not for predicting potential engine failures. It is recommended that new engines be operated through at least one oil change interval determined by the chart method prior to initiating a used oil analysis program.

In order to initiate a used oil analysis program for a large number of engines they should be grouped by basic model, rated horsepower and type of service. The horsepower range of a group should not exceed 25; in other words NTC-270 and NTC-290 engines could be placed in the same group, however, NTC-290 and NTC-350 engines should be in separate groups. Small vee, medium vee, NH and K models should be in separate groups. After the engines have been grouped, a sub-group consisting of 10 percent of the total engines in each group should be selected for the used oil analysis program. If a group consists of less than 50 engines but more than 25 engines the sub-group size should be 5 engines. For groups of less than 25 engines the sub-group size should be 8 engines. The selecting of the engines for each sub-group should be completely random.

Each group of engines should be set up on oil change intervals as described under the "Chart Method". When the engines reach the end of the second chart method oil change interval, an oil change should be performed on all units in the group except those engines selected for the sub-group. The engines in the sub-groups should only have an oil sample taken. Additional oil samples should be taken from each of the engines in the sub-groups at every 48-operating-hour interval after the first sample. This sampling frequency may be varied somewhat as dictated by the operation. The sampling frequency should not be extended beyond 60 hours for equipment safety reason or reduced below 40 hours because of the added analytical costs.

This sampling process should continue until the results of the analyses of the samples indicate that any one of the condemnation limits listed in Table 2-3 has been reached or exceeded until the desired oil change interval extension is reached. This process should be continued cautiously since the engines in the sub-groups are subject to permanent damage because of the over-extended oil change interval. The analytical work on the samples and the examination of the analytical results should be done as quickly and carefully as possible to prevent serious engine damage.

Table 2-3: Lubricating Oil Condemnation Limits

Property (ASTM Method*)	Condemnation Limit
Viscosity @ 100° C (D-445)	± 1 SAE Viscosity grade** from the new oil
Insolubles, pentane, noncoagulated (D-893)	1.0% maximum
Insolubles, toluene, noncoagulated (D-893)	1.0% maximum
Total acid number (D-664)	3.5 number increase from the new oil value, maximum
Total base number (D-664)	2.0, minimum
Water content (D-95)	0.2% maximum
Additive metal content (AES or AAS***)	75% of new oil level, minimum

*ASTM (The American Society for Testing and Materials) publishes these methods in their Annual Book of Standards, Part 23. Other methods should not be used without consulting Cummins.

**SAE Viscosity grades are published by the Society of Automotive Engineers in their annual SAE Handbook as SAE Recommended Practice J300d, and are shown in Table 1 of thsi bulletin.

***AES (Atomic Emission Spectroscopy) and AAS (Atomic Absorption Spectroscopy) are not standard ASTM methods, however most used oil analysis laboratories are capable of determining additive metal concentration by one of these methods and sample results determined by the same laboratory using the same method can be safely compared.

To determine whether the maximum oil change interval has been reached the properties in Table 2-3 should be determined by the laboratory methods specified. This table also specifies condemnation limits to be used for determining the lubricating oils' useful life. This group of analyses and the methods are not generally part of the oil analyses offered by most

Digitized by Google

commercial used oil analysis laboratories. These analyses are not low cost, generally costing between $50 and $135 per sample.

When any one of the condemnation limits is exceeded on any one sample an oil change should be performed on all engines in the sub-group. The hours at which the sample for which a condemnation limit was exceeded is the oil change interval at which 10% or more (depending on sub-group size) of the group are using lubricating oil which has exceeded its useful life. This sampling and analysis process should be repeated once to confirm the oil change interval. When this process is complete the entire group of engines can be placed on the new oil change interval.

This method of establishing an oil change interval will determine a different interval for each group of engines. It is not possible to provide maintenance on several different schedules or if one desires to schedule the oil change to coincide with other maintenance, the more conservative (or shorter) maintenance schedule should be used.

Please contact your Cummins Service Representative if you need assistance or have any questions about utilizing this method of determining an oil change interval.

Change Engine Oil

Factors to be checked and limits for oil analysis are listed below. Oil change at "B' Check, as shown in the maintenance chart on Page 2-2, is for average conditions.

1. Bring engine to operating temperature, shut down engine, remove drain plug from bottom of oil pan, and drain oil.
2. Install drain plug in oil pan. On 855, V-903, KT(A)-1150, KT(A)-2300 and KTA-3067 Engines torque to 60 to 70 ft-lbs [81 to 95 N•m]. On V-378, V-504 and V-555 Engines torque to 35 to 40 ft-lbs [47 to 54 N•m]. On V-1710 Engines torque to 45 to 55 ft-lbs [61 to 75 N•m].
3. Fill the crankcase to "H" (high level) mark on the dipstick.
4. Start engine and visually check for oil leaks.
5. Shut down the engine; allow 15 minutes for oil to drain back into the pan; recheck the oil level with the dipstick. Add oil, as required.

Note: Use lubricating oil meeting specifications listed in Section 3, and genuine Cummins filters on equipment.

Change Spin-On Lubricating Oil Filter Elements

1. Unscrew combination case and elements, Fig. 2-15, discard elements.

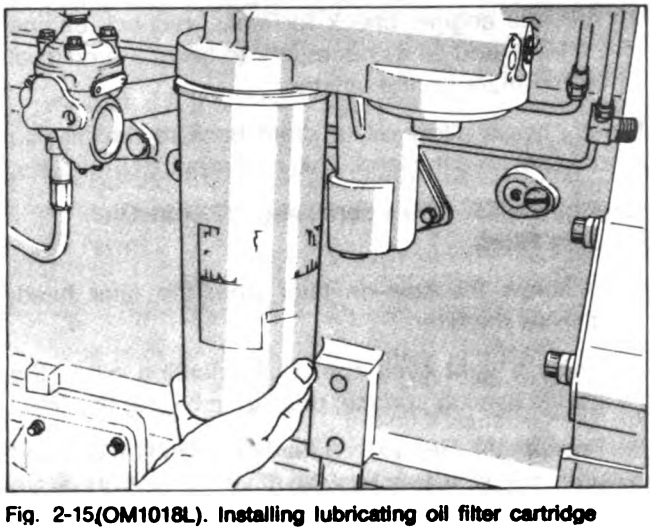

Fig. 2-15(OM1018L). Installing lubricating oil filter cartridge

Note: At each filter change check torque of adapter mounting capscrew; it should be 25 to 35 ft-lbs [34 to 47 N•m]. If the capscrew is not within torque range, the adapter may rotate when the spin-on filter is removed. Replace the adapter to the filter head gaskets at each "C" maintenance check.

2. Fill the filter with lubricating oil. Apply a light even coat of lubricating oil to the gasket sealing surface prior to installing the filter.

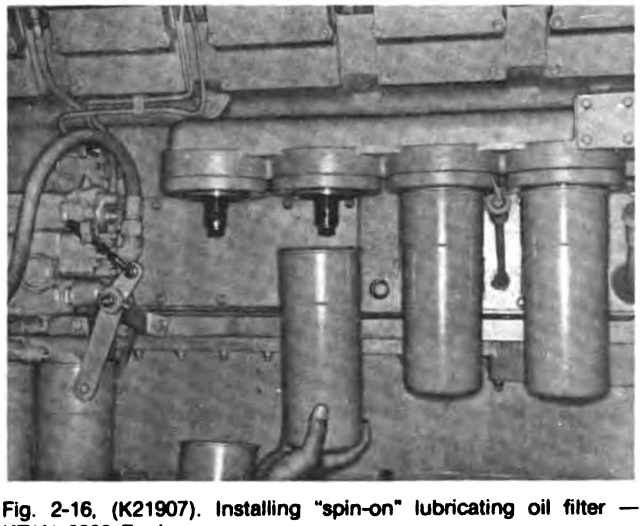

Fig. 2-16, (K21907). Installing "spin-on" lubricating oil filter — KT(A)-2300 Engine

Digitized by Google

3. Position element to the filter head, Fig. 2-16. Tighten by hand until the seal touches the filter head, tighten an additional one-half to three-fourths turn.

4. Run the engine, check for leaks, recheck engine oil level; add oil as necessary to bring the oil level to "H" mark on the dipstick.

Note: Always allow oil to drain back to the oil pan before checking the level. This may require 15 minutes.

Change the LF—777 Lubricating Oil Spin-On By-pass Filter.

1. Unscrew the spin-on filter from the filter head; discard the filter.
2. Apply a light even coat of lubricating oil to the gasket sealing surface, prior to installing the filter.
3. Position the filter to the filter head. Tighten by hand until the seal touches the filter head; tighten an additional one turn.
4. Run the engine, check for leaks, shut-down the engine. Add oil as necessary to bring the oil level to the "H" mark on the dipstick.

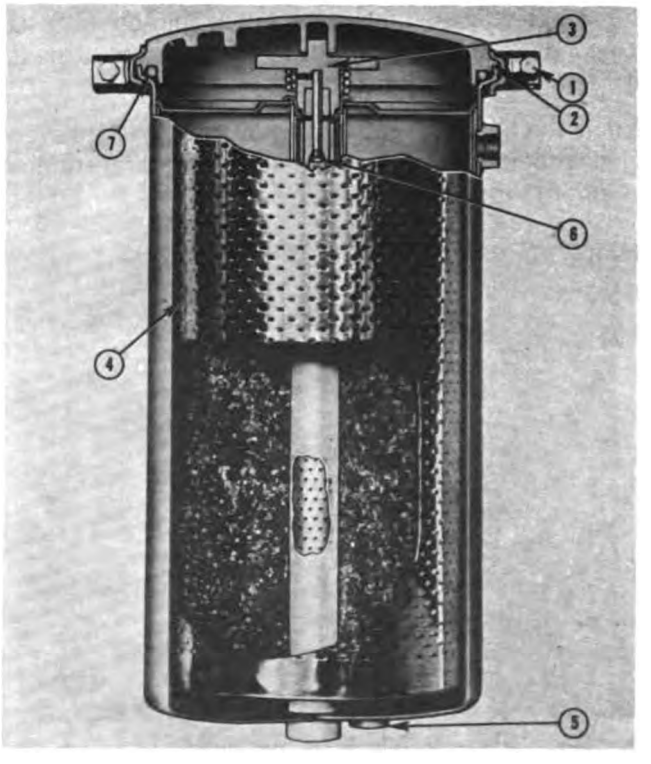

Fig. 2-17, (V41908). By-pass filter cross section

Change Lubricating Oil By-Pass Filter Element

Note: By-pass filters may be mounted either vertically, horizontally or inverted; all are serviced in like manner.

1. Remove the drain plug (5, Fig. 2-17) and drain oil.
2. Remove the clamping ring capscrew (1) and lift off the cover.
3. Unscrew the support hold-down assembly (3); lift out the element (4) and the hold-down assembly. Discard the element.
4. Clean the housing and hold-down assembly in solvent.
5. Inspect the hold-down assembly spring and seal. Replace if damaged.
6. Inspect the drain plug and connections. Replace if damaged.
7. Check the orifice plug (6) inside the oil outlet connection or standpipe; blow out with air to open and clean.
8. Check the filter cover O-ring (7). Replace if necessary.
9. Install the new element in the housing, Fig. 2-18.
10. Replace the support hold-down assembly in the filter and tighten down to stop.
11. Position the O-ring seal on the housing flange.
12. Install the cover and clamping ring; tighten the capscrews until the clamping lugs are indexed.
13. Run the engine, check for leaks; add enough extra oil to the crankcase to fill to the "H" (high) mark on the dipstick.

Fig. 2-18, (K21908). Installing by-pass filter element

Digitized by Google

Caution: Never use a by-pass filter in place of a full-flow filter.

Change Fuel Filter Element

Spin-On Type Filter

1. Unscrew the combination case and element, Fig. 2-19, discard the element.
2. Fill the new filter with clean fuel and apply a light even coat of lubricating oil to the gasket sealing surface prior to installing the filter.
3. Install the filter; tighten by hand until the seal touches the filter head. Tighten an additional one-half to three-fourths turn.

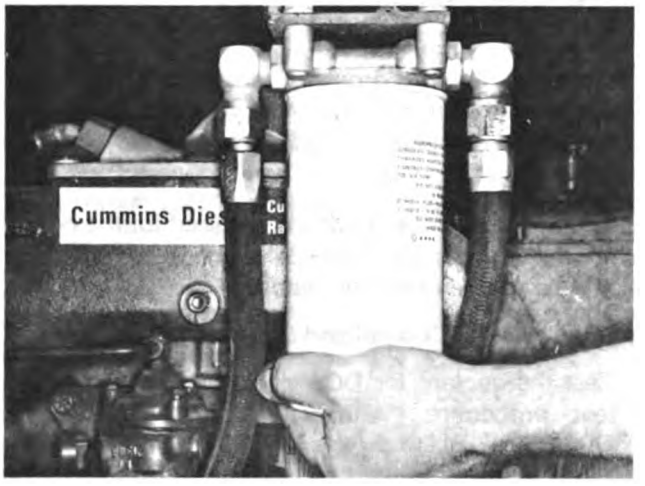

Fig. 2-19, (V11909). Changing "spin-on" type fuel filter

Caution: Mechanical tightening will distort or crack the filter head.

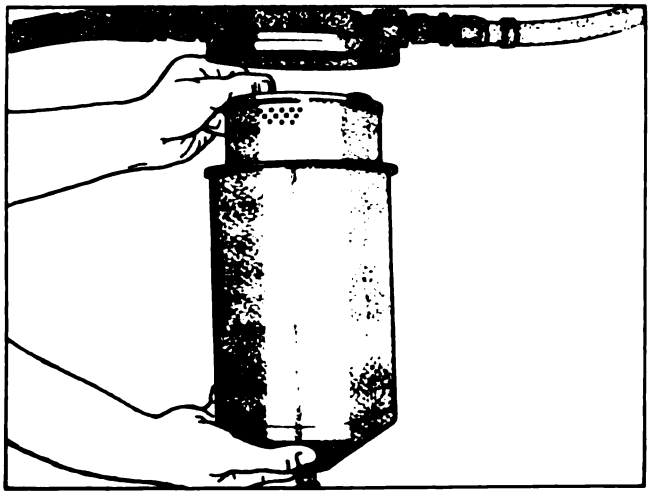

Fig. 2-20,(OM1021L). Installing replaceable fuel filter element

Replaceable Element

1. Open the drain cock(s) and drain the contents.
2. Loosen the nut(s) at the top of the fuel filter(s). Take out the dirty element, clean the filter case(s) and install new element(s). Fig. 2-20.
3. Install new gasket(s) in the filter(s) and assemble the case(s) and element(s). Tighten center bolt(s) to 20 to 25 ft-lbs [27 to 34 N•m] with a torque wrench. Fill the filter case(s) with clean fuel to aid in faster pick-up of fuel.
4. Check the fittings in the filter head(s) for leaks. Fittings should be tightened to 30 to 40 ft-lbs [41 to 54 N•m].

Check Engine Coolant

Periodic tests of the engine coolant should be made to ensure that the frequency of water filter servicing or concentration of DCA inhibitor is adequate to control corrosion for any specific condition of operation. In cases where "make-up" water must be added frequently, we suggest that a supply of water be treated and added as necessary.

The concentration of effective inhibitor dissolved in

Fig. 2-21, (N12021). DCA coolant test kit

Digitized by Google

the coolant can be measured by a Fleetguard DCA Coolant Checking Kit Part No. 3300846-S or Cummins 3375208 which is available from Cummins Distributors for this check. Fig. 2-21.

The test kit indicates DCA concentration by measuring the total nitrite of a coolant sample, which provides cylinder liner cavitation protection.

When antifreeze is present, it may contribute to the total nitrite, but most of the nitrite protection is obtained from the DCA inhibitor. In general, a good nitrite reading indicates that the combined inhibitor packages contained in the antifreeze (if used) and in DCA are sufficient to ensure complete cooling system protection.

Concentration Test Procedure

1. Rinse the plastic dropper pipet several times with the engine coolant. Fill the dropper exactly to the 1.0 ml. mark. Discharge into the empty vial.
2. Fill the vial to the 10 ml. scribe mark with tap water and mix well. (This dilution step is necessary to minimize the differing colors of antifreeze.)
3. Add two or three drops of Solution B and swirl to form a uniform red color.
4. Add one drop of Solution A to the vial, being careful to hold the dispenser provided in a vertical postion. Swirl.

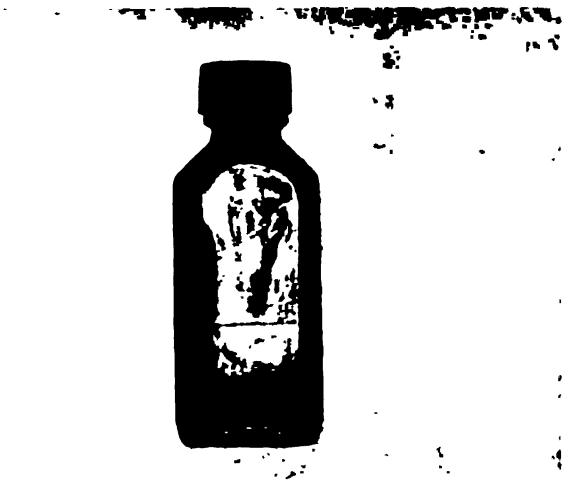

Fig. 2-22, (V12022). Mixing bottle

5. Continue adding drops of solution A, keeping count of the number of drops and swirl between each drop until the color changes from red to a pale grey, green, or blue.
6. Record the number of drops required for the color change and consult Table 2-4 for coolant condition and recommended maintenance.

Adding Make-Up Coolant and DCA to Cooling System

1. Test the coolant for DCA according to the nitrite test procedure "With or Without Antifreeze"

Table 2-4: Number of Drops of Test Solution "A"

Coolant With Antifreeze	Coolant Without Antifreeze	Coolant Condition	Maintenance Required
0-12	0-6	Dangerous (0 to 0.6 oz. per gallon DCA)	Precharge system or add make-up DCA to top tank
12-17	7-12	Borderline (0.7 to 1.2 oz. per gallon DCA)	Replace service filter and/or add make-up DCA to top tank.
18-25	13-20	Acceptable (1.3 to 2.0 oz. per gallon DCA)	None.
25-30	20-30	Tolerable (2.0 to 3.0 oz. per gallon DCA)	None.
Over 30	Over 30	Overrated (over 3.0 per gallon DCA)	Drain part of coolant and make-up with plain antifreeze and water.

Note: Ethylene glycol/water solutions should not contain more than 3.0 oz. per gallon DCA or Dowtherm 209/water solutions should not contain more than 2.0 oz. per gallon DCA. Concentrations in excess of the above can cause sludge to form in the water filter.

Digitized by Google

depending on the presence or absence of antifreeze in the cooling system.

2. Estimate the make-up DCA. For example, if a fifteen gallon cooling system contains only 0.5 oz/gal. [4 ml per l] DCA, and 1.5 oz/gal. [12 ml per l] is required, 15 ounces [426 g] of DCA should be added to the make-up coolant.

Note: A one pint bottle of DCA-4L liquid (P/N 3300858) contains six dry ounces of DCA chemical in Step 2, concentrations are in dry ounces of chemical per gallon of coolant.

3. Estimate the total amount of make-up coolant required (gallons), and calculate the proportions of water and antifreeze, if used, required. For example, one gallon of 50-50 antifreeze/water solution will require two quarts of antifreeze and two quarts of water.

4. Add the required amount of water to a mixing container and dissolve the number of ounces of DCA obtained in Step 2 in the water. If negative or zero results were obtained in Step 2, do not add DCA. (For DCA to dissolve, water should be above 50°F [10°C].)

5. Add the required amount of antifreeze, if used, to the water solution and mix thoroughly.

6. Add the make-up coolant to the cooling system.

Note: If the DCA concentration is low, and the coolant level high, DCA may be added directly to the radiator in the amount indicated in Step 2. The engine should be running and warm enough to permit coolant circulation throughout the entire system.

Bulk Storage of Make-Up Coolant

If make-up coolant is stored in bulk, the following recommendations are provided for mixing and storing the coolant.

1. Drain and clean the bulk storage tank to remove any possible contaminants.

2. Knowing the total capacity of the holding tank, calculate the proportions of water and antifreeze, if used, required. For example, a 500 gallon [1892 l] tank will hold 250 gallons [946 l] of water and 250 gallons [946 l] of antifreeze for a 50-50 mixture.

3. Multiply the desired DCA concentration by the total capacity of the holding tank in gallons. In the example above, 1.5 oz. DCA per gallon [12 ml per l] of coolant can be used in the 50-50 mixture. Multiplying 1.5 oz. DCA per gallon [12 ml per l] times 500 gallons [1892 l] yields a total DCA requirement of 750 oz. [46 lb. 14 oz.) [21.3 kg].

4. Add the water to the holding tank. Agitating continuously, add the DCA to the water in small amounts until all of the chemical has dissolved. The water should be above 50°F [10°C].

5. Add the antifreeze last, if used, maintaining agitation to bring and keep the finished coolant in solution. Both antifreeze and DCA will settle to the bottom of the tank unless constant mixing or recirculation is provided. An example of recirculation is the use of a small pump operating continuously to draw DCA and antifreeze off the bottom of the tank and discharging the solution at the top. Samples of coolant can be drawn off the top, middle and bottom of the storage tank and tested for antifreeze and/or DCA concentration if inadequate mixing is suspected.

Change DCA Water Filter

Change the filter or element at each "B" Check; selection of element to be used should be based upon the size of the system. See "Coolant Specifications", Section 3.

Note: Whenever the coolant supply is changed the system must be drained, flushed, and precharged. See "Coolant Specifications", Section 3 for DCA compatibility with different brands of antifreeze.

Spin-On Element

1. Close the shut-off valves on the inlet and drain lines.

2. Unscrew the element and discard.

3. Apply a light even coat of lubricating oil to the

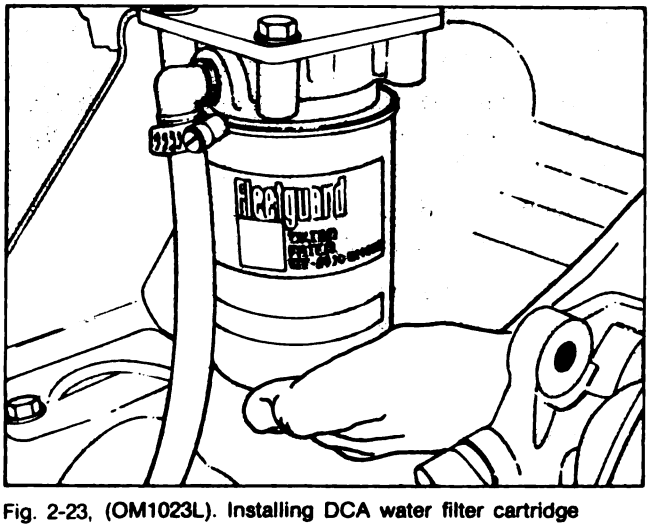

Fig. 2-23, (OM1023L). Installing DCA water filter cartridge

Digitized by Google

gasket sealing surface prior to intalling the filter.

4. Install a new element, tighten until the seal touches the filter head. Tighten an additional one-half to three-fourths turn. Fig. 2-23. Open the shut-off valves.

Caution: Mechanical tightening will distort or crack the filter head.

Check Oil Levels

Check Aneroid Oil

1. Remove the pipe plug from the hole marked "Lub Oil".
2. Fill with engine lubricating oil to the level of the pipe plug hole. Reinstall the pipe plug.

Check Hydraulic Governor Oil Level

Keep the level half-way up on the inspection glass or to the high-level mark on the dipstick. Use the same grade oil as used in the engine.

Clean/Change Crankcase Breather

Mesh Element Breather

1. Remove the wing nut (6, Fig. 2-24), flatwasher and rubber washer securing the cover (1), to the breather body (5).
2. Lift off the cover and life out the breather element (2), vapor element (3), and gasket (4).
3. Clean all metal and rubber parts in an approved cleaning solvent. Dry thoroughly with compressed air.
4. Inspect the rubber gasket; replace it if necessary. Inspect the body and cover for cracks, dents or breaks; discard all unserviceable parts.
5. Install a cleaned or new breather element (2, Fig. 2-24) and cleaned vapor element (3) to the breather body (5).
6. Install the rubber gasket (4) in the cover (1); position the cover assembly to the body (5).
7. Install the rubber washer, flatwasher and wing nut (6); tighten securely.

Screen Element Breather — Cleaning and Inspection

1. Remove the vent tube if not previously removed.
2. Remove capscrews, washers, cover, screens and baffle if used, from the breather body. Fig. 2-25.

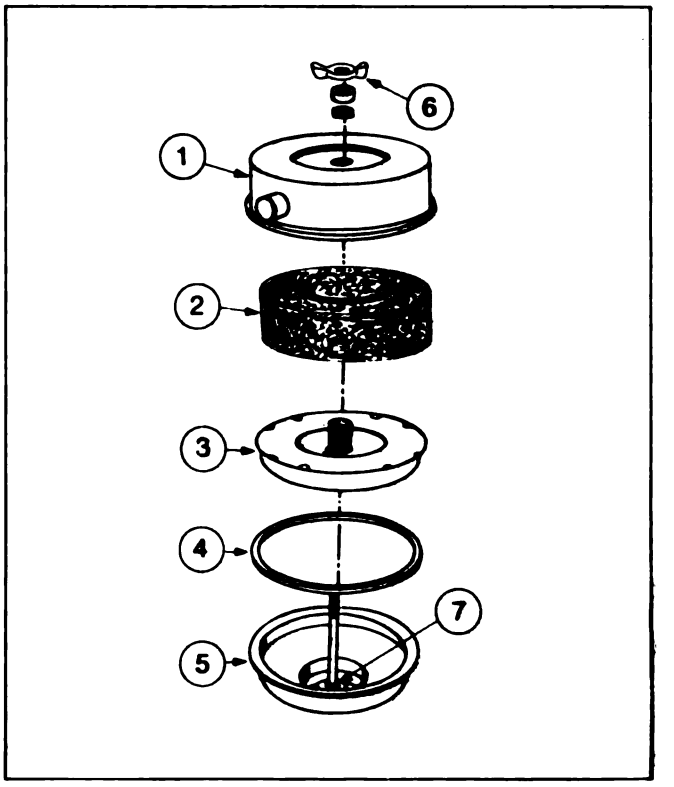

Fig. 2-24, (V51909). Crankcase breather — mesh element with vapor barrier

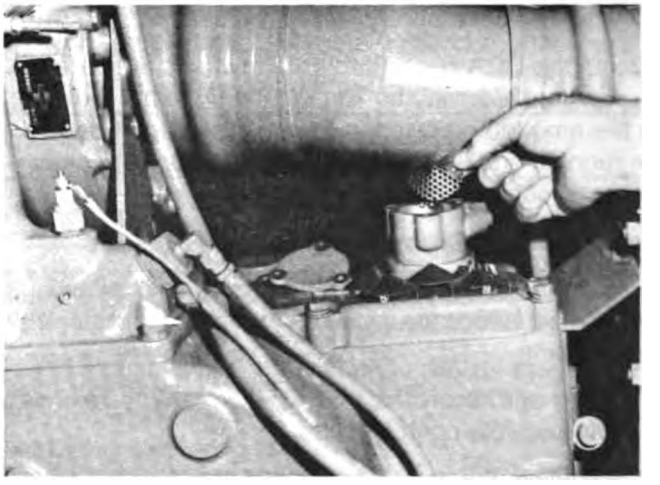

Fig. 2-25, (N11934). Crankcase breather — screen type

3. Clean the vent tube, screens and baffle in an approved cleaning solvent. Dry with compressed air. Wipe out the breather housing.
4. Assemble the baffle and screens, if used, and a new gasket in the body.
5. Replace the cover with the cover boss resting

Digitized by Google

securely on the point of the screen, if used; secure with washers and capscrews.

6. Replace the vent tube.

Clean Air Compressor Breather

When used, service breathers regularly as follows:

Bendix-Westinghouse Paper Element

Remove the breather cover and element. Fig. 2-26. Clean by reverse flushing with compressed air; reassemble on the compressor. Discard the element if it is damaged or unsuitable for cleaning.

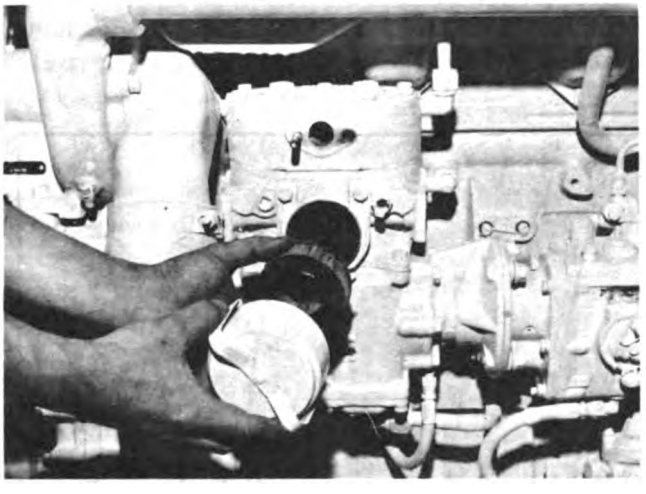

Fig. 2-26, (V41420). Bendix-Westinghouse air compressor breather

Bendix-Westinghouse Sponge

Remove the breather from the air compressor. Disassemble the breather, wash all metal parts in solvent and blow dry with compressed air. Wash the element in solvent; remove all solvent from the element; dip it in clean engine oil and squeeze excess oil from the element.

Cummins Paper

Clean the element at each "D" maintenance check. Remove the wing nut securing the front cover to the body. Lift off the front cover and element. Inspect the paper element before cleaning by reverse flow of compressed air; discard the element if it is damaged or unsuitable for cleaning. Fig. 2-27.

Caution: Do not rupture the filter element.

Clean the body and front cover with a clean cloth. With the rubber gasket on center bolt, place the element in the front cover and assemble over the center bolt; secure with the wing nut.

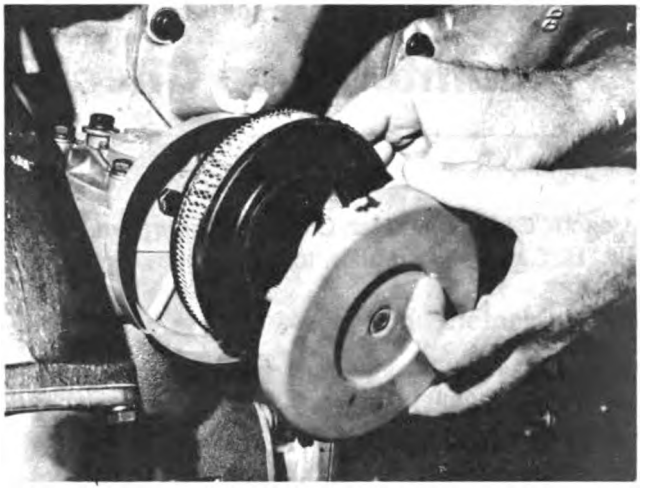

Fig. 2-27, (V414209). Cummins air compressor breather — paper element

Note: At any time the three-prong unloader hat is used, it will set up air pulsations across the compresor intake which can destroy the paper element. Pipe intake air for Cummins compressors from the engine air manifold when the three-prong unloader hat is applied; current factory-installed compressors are so equipped. This same procedure may be used for any Cummins Compressor in the Field.

Clean Tray Screen

Clean the tray screen in kerosene or cleaning solvent. Dry with compressed air, reassemble to the cleaner.

Note: If the tray screen is extremely dirty, it may be necessary to singe the screen with a flame. Do not melt the tin plate on the screen.

Digitized by Google

"C" Maintenance Checks

At each "C" Maintenance Check, first perform all 'A", and "B" Checks in addition to those following:

Adjust Injectors and Valves

It is essential that the injectors and valves be in correct adjustment at all times for the engine to operate properly. One controls engine breathing; the other controls fuel delivery to the cylinders.

Final operating adjustments must be made using correct values as stated.

Caution: Be sure the injector and valve set markings, wherever located, are in proper alignment with the indicator mark.

Engine Temperatures

The following temperature conditions provide the necessary stabilization of engine components to allow for an accurate valve and injector adjustment.

Cummins Engine Company, Inc. recommends that valve and injector plunger adjustments be made when the engine is cold. The engine must be at any stabilized temperature of 140° F [60° C] or below.

A second setting or resetting after the engine is warm is not recommended.

Injector Plunger Adjustment Using Torque Method, V/VT-378, V/VT-504, V/VT-555 Engines

The injectors and valves must be in correct adjustment at all times for the engine to operate properly. This controls engine breathing and fuel delivery to the cylinders. Final adjustment must be made when the engine is at operating temperature. The injectors must always be adjusted before the valves. The procedure is as follows:

Valve Set Mark Alignment

1. Turn the crankshaft in direction of rotation until No. 1 "VS" mark appears on the vibration damper or crankshaft pulley. See Fig. 2-28 for the location of the valve set marks. In this position, both intake and exhaust valves must be closed for cylinder No. 1; if not, advance the crankshaft one revolution. See Fig. 2-29, Fig. 2-30 and Table 2-5 for firing order.

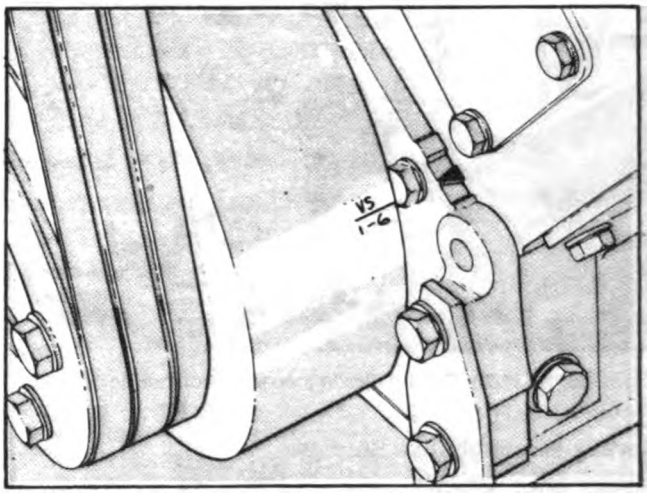

Fig. 2-28, (OM1035L). Valve set marks—V/VT-555, C.I.D. Engine

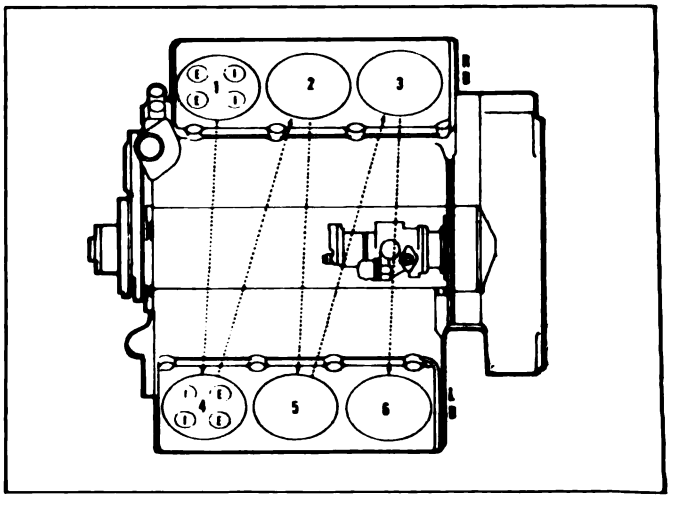

Fig. 2-29, (V11461). V6 firing order

Digitized by Google

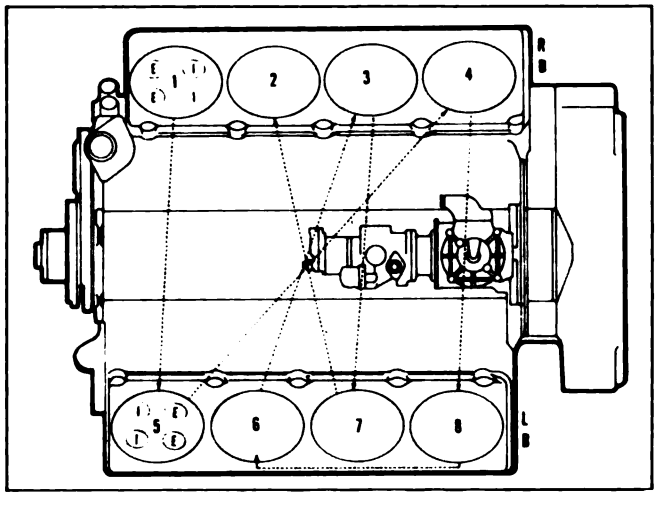

Fig. 2-30, (V11462). V8 firing order

Note: Do not use the fan to rotate the engine.

2. Adjust the injector plunger, then the crossheads and valves of the first cylinder as explained in succeeding paragraphs. Turn the crankshaft in the direction of rotation to the next "VS" mark corresponding to the firing order of the engine and the corresponding cylinder will be ready for adjustment. See Table 2-5.

3. Continue turning the crankshaft in the direction of rotation and making adjustments until all injectors and valves have been correctly adjusted.

Table 2-5: Engine Firing Order V Engines

Right Hand	V8	1-5-4-8-6-3-7-2
Right Hand	V6	1-4-2-5-3-6

Note: Two complete revolutions of the crankshaft are needed to set all injector plungers and valves. The injector and valves can be adjusted for only one cylinder at any one "VS" setting.

Injector Plunger Adjustment

Before adjusting the injector, tighten the injector hold-down capscrew to 30 to 35 ft-lbs [41 to 47 N•m].

The injector plungers of all engines must be adjusted with an in-lb torque wrench to a definite torque setting. Snap-On Model TQ12B or equivalent torque wrench and a screwdriver adapter can be used for this adjustment. Fig. 2-31.

1. Turn the adjusting screw down until the plunger contacts the cup and advance an additional 15 degrees to squeeze the oil from the cup.

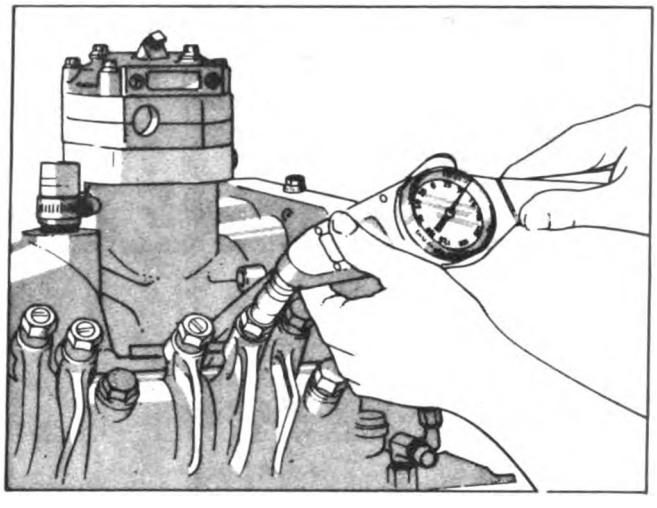

Fig. 2-31, (OM1037L). Adjusting injector plunger

2. Loosen the adjusting screw one turn. Using a torque wrench calibrated in in-lbs and a screwdriver adapter, tighten the adjusting screw to the values shown in Table 2-6 for cold setting and tighten the locknut.

Table 2-6: Injector Plunger Adjustment Torque V/VT-378, V/VT-504, V/VT-555 Engines

Oil Temperature Cold	Oil Temperature Hot
60 in-lbs [6.8 N•m]	60 in-lbs [6.8 N•m]

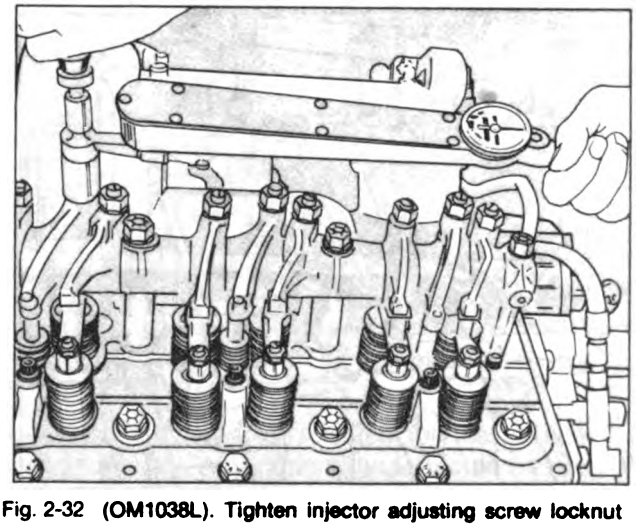

Fig. 2-32 (OM1038L). Tighten injector adjusting screw locknut

Digitized by Google

Note: After all the injectors and valves are adjusted and the engine has been started and warmed up to 140° F [69° C] oil temperature, reset the injectors to the warm setting. This is only necessary if the injectors, lever assemblies, or push rods have been changed.

3. Hold the injector adjusting screw and tighten the injector adjusting screw locknut to the values indicated in Table 2-7.

When an ST-669 Adapter is used, nut torque is reduced to compensate for additional torque arm length. Fig. 2-32.

Table 2-7: Injector and Valve Locknut Torque V/VT-378, V/VT-504, V/VT-555 Engines

Without ST-669	With ST-669
40 to 45 ft-lbs. [54 to 61 N•m]	30 to 35 ft-lbs. [41 to 47 N•m]

Crosshead Adjustment

Crossheads are used to operate two valves with one rocker lever. The crosshead asjustment is provided to assure equal operation of each pair of valves and prevent strain from misalignment.

1. Loosen the valve crosshead adjusting screw locknut and back off the screw one turn.
2. Use light finger pressure at the rocker lever contact surface to hold the crosshead in contact with the valve stem (without the adjusting screw).

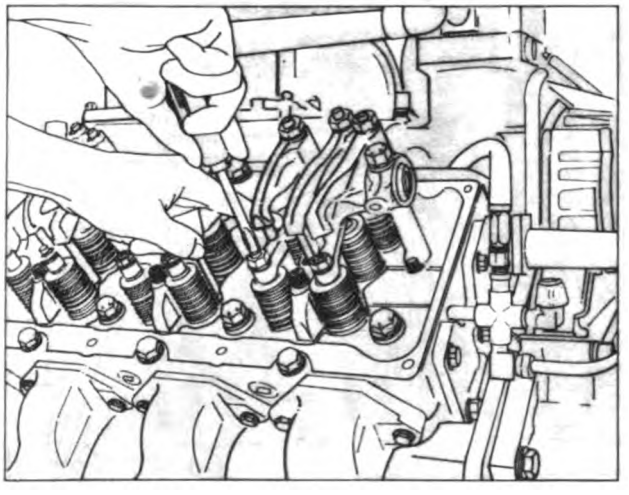

Fig. 2-33. (OM1039L). Adjusting crossheads

3. Turn down the crosshead adjusting screw until it touches the valve stem. Fig. 2-33.
4. Hold the adjusting screw in this position and torque the locknut to the values listed in Table 2-8.
5. Check the clearance between the crosshead and the valve spring retainer with a wire gauge. There must be a minimum of 0.025 inch [0.64 mm] clearance at this point.

Valve Adjustment

The same crankshaft position used in adjusting the injectors is used for setting the intake and exhaust valves.

Table 2-8: Crosshead Locknut Torque

Without ST-669	With ST-669
25 to 30 ft-lbs. [34 to 41 N•m]	22 to 26 ft-lbs. [30 to 35 N•m]

1. Loosen the locknut and back off the adjusting screw. Insert a feeler gauge between the rocker lever and the top of the crosshead. Valve clearances are shown in Table 2-9. Turn the screw down until the lever just touches the gauge and lock the adjusting screw in this position with the locknut. Fig. 2-34. Torque the locknut to the values indicated in Table 2-7; note Step 2 under "Injector Plunger Adjustment".

Table 2-9: Valve Clearances — Inch [mm] V/VT-378, V/VT-504, V/VT-555 Engines

Intake Valve Oil Temperature Cold	Exhaust Valve Oil Temperature Cold
0.012 [0.30]	0.022 [0.56]

V-903 Engines Injector Adjustment, Using Dial Indicator Method

This method involves adjusting the injector plunger

Digitized by Google

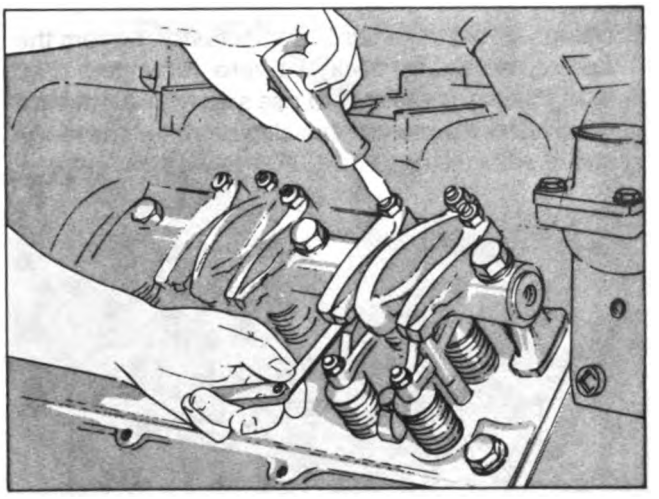

Fig. 2-34, (OM1040L). Adjusting valves

travel with an accurate dial indicator rather than tightening the adjusting screw to a specified torque.

The "indicator method" eliminates errors in adjustment caused by friction in the screw threads and distortion from overtightening the adjusting screw locknut. A check can be made of the adjustment without disturbing the locknut or screw setting. The valves can also be checked or set while adjusting the injectors by this method. See Table 2-10 for specifications.

Table 2-10: Adjustment Limits Using Dial Indicator Method Inch [mm] V-903 Engines

Injector Plunger Travel	Valve Clearance Intake	Exhaust
1 to 1 Rocker Lever Ratio — Injector Lever P/N 211319		
0.187 ± 0.001 [4.75 ± 0.03]	0.012 [0.30]	0.025 [0.64]

Before adjustment, tighten the injector hold-down capscrew to 30 to 35 ft-lbs [41 to 47 N•m] torque.

Note: Remove the key, and using either a 3/8 inch hex drive for female type barring device or a 5/8 inch six-point socket for the male type barring device, press inward until the barring gear engages the drive gear; then advance. Fig. 2-35. After completion of adjustment, be sure the drive retracts and install the key into the safety lock groove.

Using the regular engine barring device, Fig. 2-35, rotate the engine in the direction of rotation with the "VS" mark for cylinder 2-8 is aligned with the pointer. In this position both the intake and exhaust valve rocker levers for No. 2 cylinder should be free and can be moved up and down. If not, bar the engine another 360 degrees in the direction of rotation and realign the 2-8 "VS" mark.

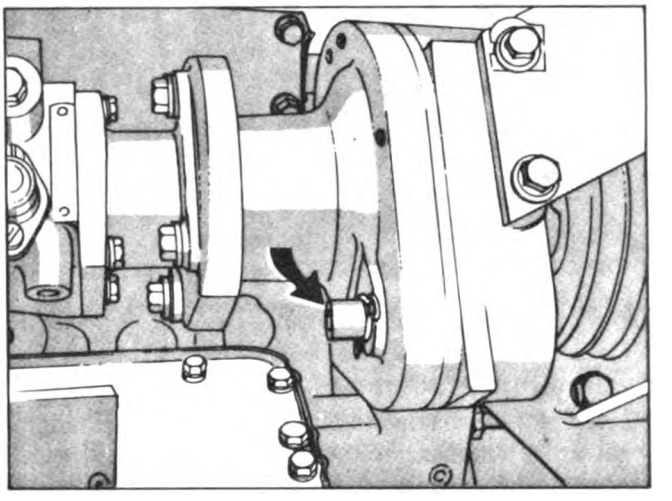

Fig. 2-35, (OM1041L). Barring V-903 Engine

The timing mark locations (Fig's. 2-36 and 2-37) are used with the dial indicator method of setting the injectors and valves. Alignment, in either location, should be held to within one-half inch [12.7 mm] of the pointer.

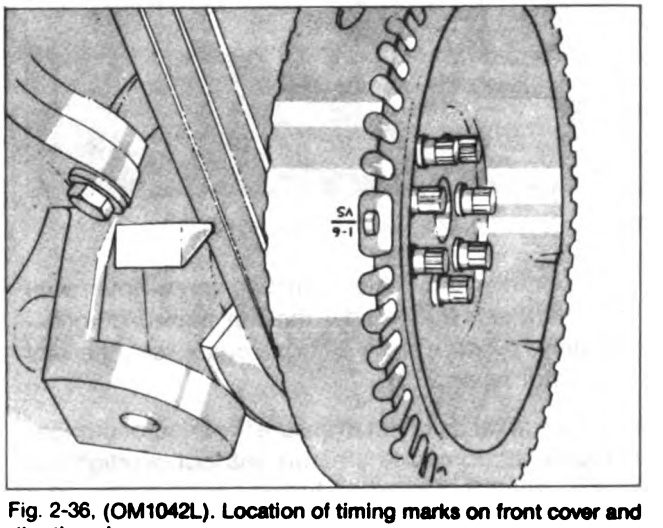

Fig. 2-36, (OM1042L). Location of timing marks on front cover and vibration damper

Note: No. 2 cylinder is selected for the purpose of illustration only. Any other cylinder could be used, if so desired.

Digitized by Google

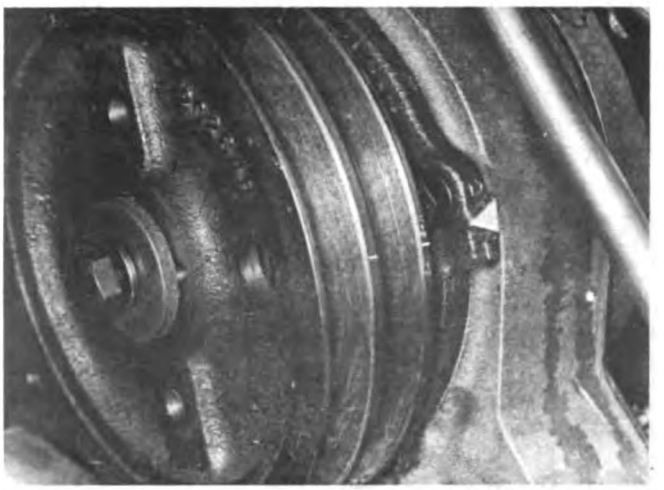

Fig. 2-37, (V514127). Valve set mark on accessory drive — V-903

1. Set up the ST-1270 Indicator Support with the indicator extension atop the injector plunger flange at No. 2 cylinder, Fig. 2-38.

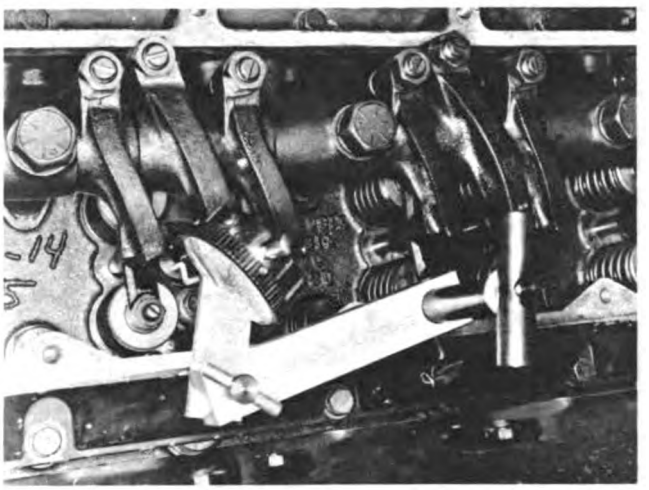

Fig. 2-38, (V514114). Dial indicator in place — V-903

2. Screw the injector lever adjusting screw down until the plunger is bottomed in the cup, back off approximately 1/2 turn then bottom again, set the dial indicator at zero (0).

Note: Care must be taken to assure the injector plunger is correctly bottomed in the cup, without overtightening the adjusting screw, before setting the dial indicator.

3. Back the adjusting screw out until a reading of 0.187 inch [4.75 mm], reference Table 2-10, is obtained on the dial indicator. Snug tighten the locknut.

4. Using ST-1251 Rocker Lever Actuator, bottom the injector plunger, check the zero (0) setting. Fig. 2-39. Allow the plunger to rise slowly, the indicator must show the plunger travel to be within the range specified in Table 2-10.

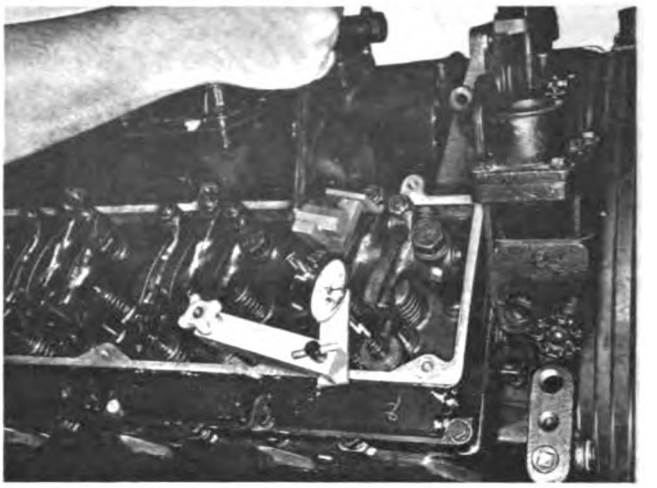

Fig. 2-39, (V514128). Bottoming injector plunger in cup — V-903

5. Using ST-669 Torque Wrench Adapter to hold the adjusting screw in position, torque the locknut 30 to 35 ft-lbs [41 to 47 N•m]. If the torque wrench adapter is not used, hold the adjusting screw with a screwdriver, torque the locknuts 40 to 45 ft-lbs [54 to 61 N•m].

6. Actuate the injector plunger several times as a check of the adjustment. Remove the dial indicator assembly.

7. Adjust the valves on the appropriate cylinder as determined in Step 1 and Table 2-10. Tighten the locknuts the same as the injector locknut.

Crosshead Adjustment

Crossheads are used to operate two valves with one rocker lever. The crosshead adjustment is provided to assure equal operation of each pair of valves and prevent strain from misalignment.

1. Loosen the valve crosshead adjusting screw locknut and back off the screw one turn.

2. Use light finger pressure at the rocker lever contact surfgace to hold the crosshead in contact with the valve stem (without adjusting screw). Fig. 2-40.

3. Turn down the crosshead adjusting screw until it touches the valve stem.

Digitized by Google

Fig. 2-40, (V51490). Adjusting crossheads — V-903

4. Hold the adjusting screw in position and torque the locknut to the values listed in Table 2-8.

Note: Be sure that the crosshead retainer on the exhaust valves, if used, are positioned equally on both sides of the spring over the crossheads and valve springs properly.

5. Check the clearance between the crosshead and the valve spring retainer with a wire gauge. There must be a minimum of 0.025 inch [0.64 mm] clearance at this point.

Valve Adjustment

The same engine position used in adjusting injectors is used for setting intake and exhaust valves.

1. Loosen the locknut and back off the adjusting screw. Insert a feeler gauge between the rocker lever and the top of the crosshead. Fig. 2-41. Valve clearances are shown in Table 2-10. Turn the screw down until the lever just touches the gauge, and lock the adjusting screw in position with the locknut. Torque the adjusting screw locknuts to 40 to 45 ft-lb [54 to 61 N•m] or 30 to 35 ft-lb [41 to 47 N•m] when using an ST-669 Adapter.

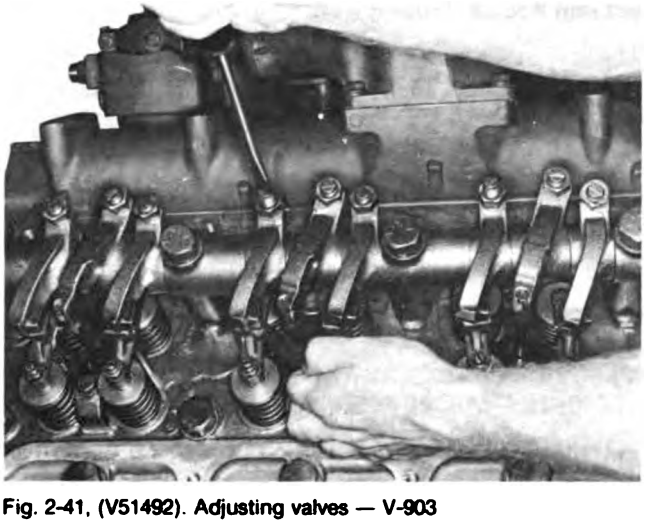

Fig. 2-41, (V51492). Adjusting valves — V-903

2. Always make the final valve adjustment after the injectors are adjusted.

NH-743, N-855, C.I.D. Engines, Injector and Valve Adjustment (Dial Indicator Method)

Note: Before adjusting the injectors and valves be sure to determine if the rocker housings are cast iron or aluminum and use the appropriate setting.

Before adjusting the injectors, torque the cylindrical injector, hold-down capscrews in alternate steps to 10 to 12 ft-lbs [14 to 16 N•m]. With flange injectors torque the hold-down capscrews in alternate steps to 12 to 14 ft-lbs [14.6 to 18 N•m]. Tighten the fuel inlet and drain connections to 20 to 25 ft-lbs [27 to 34 N•m] in the flange injectors.

Maintenance Adjustment

1. Bar the engine until "A" or 1-6 "VS" mark on the pulley, Fig. 2-42, is aligned with the pointer on the gear case cover. In this position, both valve rocker levers for cylinder No. 5 must be free (valves closed). The injector plunger for cylinder No. 3 must be at top of its travel; if not, bar the engine 360 degrees, realign the mark with the pointer.
2. Set up ST-1170 Indicator Support with the indicator extension on the injector plunger top at No. 3

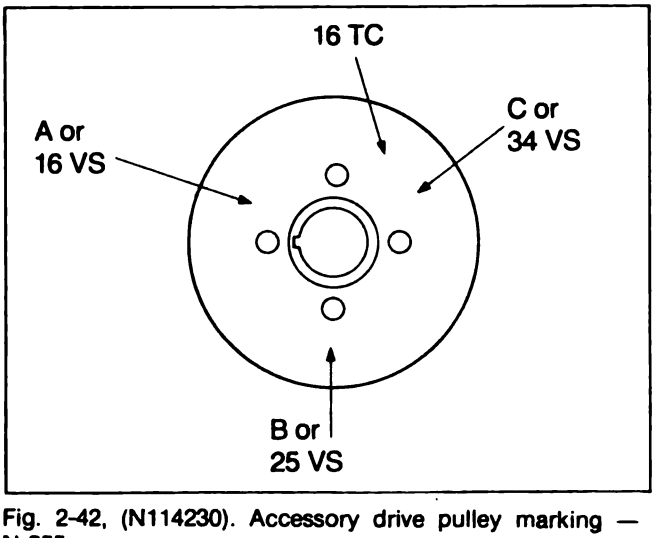

Fig. 2-42, (N114230). Accessory drive pulley marking — N-855

Digitized by Google

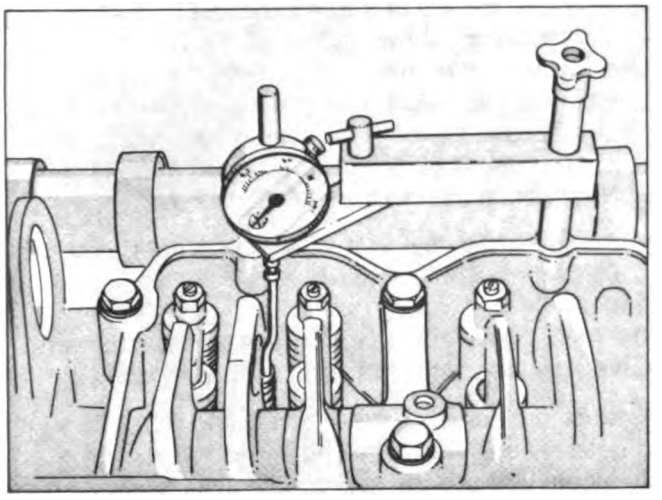

Fig. 2-43, (OM1051L). Extension in contact with plunger

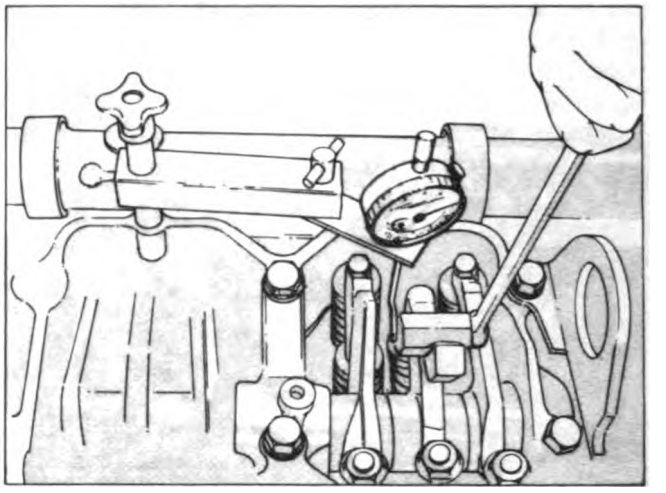

Fig. 2-44, (OM1052L). Actuating rocker lever

cylinder, Fig. 2-43. Make sure the indicator extension is secure in the indicator stem and not against the rocker lever.

Note: Cylinder No. 3 for injector setting and cylinder No. 5 for valve setting are selected for illustration purposes only. Any cylinder combination may be used as a starting point. See Tabel 2-11.

Table 2-11: Injector and Valve Set Position N-855 Engines

Bar in Direction	Pulley Position	Set Cylinder Injector	Valve
Start	A or 1-6VS	3	5
Adv. To	B or 2-5VS	6	3
Adv. To	C or 3-4VS	2	6
Adv. To	A or 1-6VS	4	2
Adv. To	B or 2-5VS	1	4
Adv. To	C or 3-4VS	5	1

3. Using ST-1193 Rocker Lever Actuator, Fig. 2-44, or equivalent, bar the lever toward the injector until the plunger is bottomed to squeeze the oil film from the cup. Allow the injector plunger to rise, then bottom again. Set the indicator at zero (0). Check the extension contact with the plunger top.
4. Bottom the plunger again, release the lever; the indicator must show travel as indicated in Table 2-12. Adjust as necessary.
5. If loosened, tighten the locknut to 40 to 45 ft-lbs [54 to 61 N•m] and actuate the injector plunger several times as a check of the adjustment. Tighten to 30 to 35 ft-lbs [41 to 47 N•m] when using ST-669 Adapter.

Table 2-12: Adjustment Limits Using Dial Indicator Method Inch [mm] N-855 Engines

Oil Temp.	Injector Plunger Travel Inch [mm]	Valve Clearance Inch [mm]	
	Adj. Value	Intake	Exhaust
Aluminum Rocker Housing			
Cold	0.170 [4.32]	0.011 [0.28]	0.023 [0.58]
Hot	0.170 [4.32]	0.011 [0.28]	0.023 [0.58]
Cast Iron Rocker Housing			
Cold	0.175 [4.45]	0.013 [0.32]	0.025 [0.63]
Hot	0.170 [4.32]	0.011 [0.28]	0.023 [0.58]
NT-855 (Big Cam only — Non Top-Stop)			
	0.228 [5.79]	0.011 [0.28]	0.023 [0.58]

Note: Check engine dataplate for injector and valve setting.

Adjust Injectors and Valves (Torque Method) V-1710, NH-743, N-855 C.I.D. Engines

Timing Mark Alignment

1. If used, pull the compression release lever back and

Digitized by Google

block in the open position only while barring the engine.

2. Loosen the injector rocker lever adjusting nut on all cylinders. This will aid in distinguishing between cylinders adjusted and not adjusted.

Note: Before adjusting the injectors and valves be sure to determine if the rocker housings are cast iron or aluminum and use the appropriate setting.

3. Bar the engine in the direction of rotation until a valve set mark (Fig's. 2-45, 2-46 and 2-47) aligns with the mark or pointer on the gear case cover. Example: A or 1-6 "VS" on Inline Engines or 1-6R "VS" on V-1710 Engines.

4. Check the valve rocker levers on the two cylinders aligned as indicated on the pulley. On one cylinder of the pair, both rocker levers will be free and the valves closed; this is the cylinder to be adjusted.

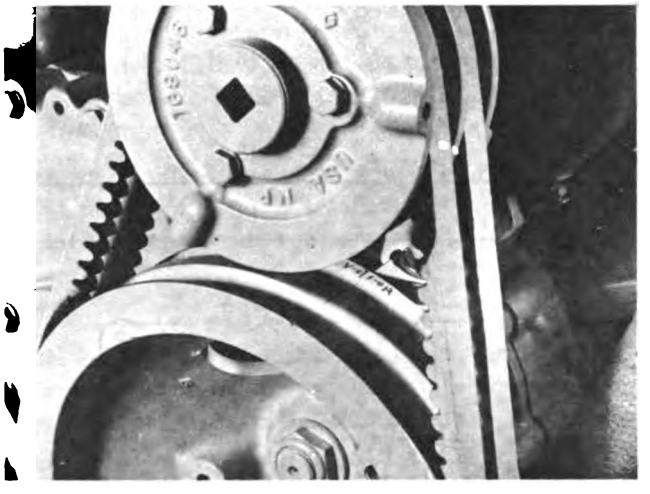

Fig. 2-45, (V41484). Valve set mark — V-1710

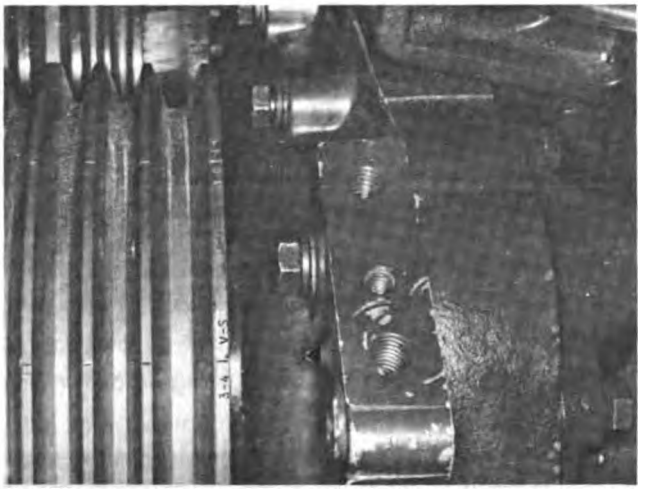

Fig. 2-46, (N114220-A). Valve set mark — N-855

5. Adjust the injector plunger first, then the cross-heads and valves to the clearances indicated in the following paragraphs.

6. For the firing order See Table 2-13 for Inline Engines and Tabel 2-14 and Fig. 2-47 for V-1710 Engines.

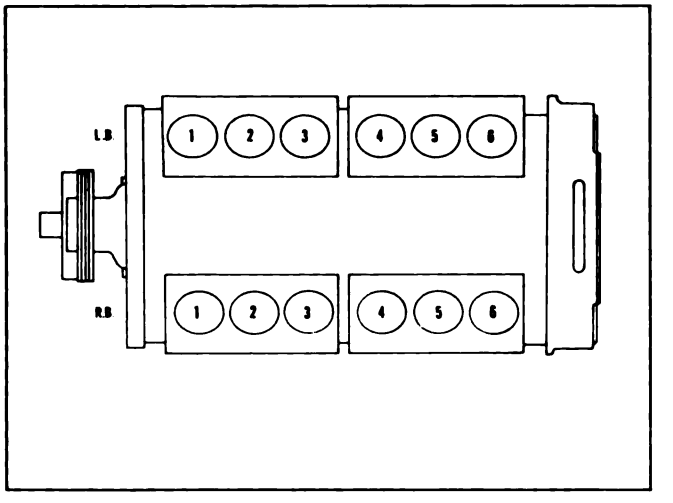

Fig. 2-47, (V414231). V-1710 piston position

Table 2-13: Engine Firing Order N-855 Engines

Right Hand Rotation	Left Hand Rotation
1-5-3-6-2-4	1-4-2-6-3-5

Table 2-14: Firing Order V-1710 Engines

Right Hand —

1L-6R-2L-5R-4L-3R-6L-1R-5L-2R-3L-4R

Left Hand —

1L-4R-3L-2R-5L-1R-6L-3R-4L-5R-2L-6R

7. Continue to bar the engine to the next "VS" mark and adjust each cylinder in the firing order.

Note: Only one cylinder is aligned at each mark. Two complete revolutions of the crankshaft are required to adjust all cylinders.

Injector Plunger Adjustment

The injector plungers must be adjusted with an inch-pound torque wrench to a definite torque setting.

Digitized by Google

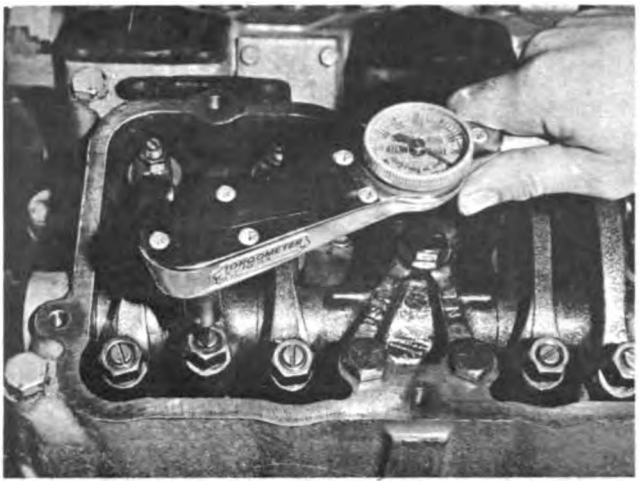

Fig. 2-48, (V414190). Adjusting injector plunger — V-1710

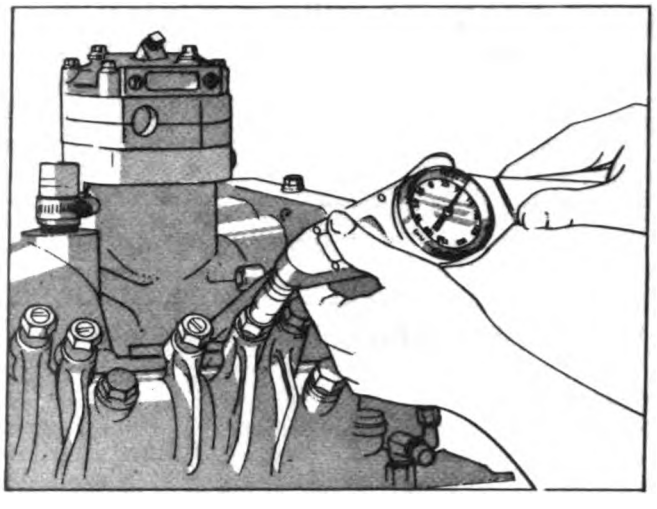

Fig. 2-49, (OM1037L). Adjusting injector plunger

Snap-On Model TE-12 or equivalent torque wrench and a screwdriver adapter can be used for this adjustment. See Fig's. 2-48 and 2-49.

1. Turn the adjusting screw down until the plunger contacts the cup and advance an additional 15 degrees to squeeze the oil from the cup.

Note: Number one L and one R cylinders on V-1710 Engines are at the gear case of the engine.

2. Loosen the adjusting screw one turn; then using a torque wrench calibrated in inch-pounds and a screwdriver adapter tighten the adjusting screw to the value shown in Tabel 2-15 and tighten the locknut to 40 to 45 ft-lbs [54 to 61 N•m] torque. If ST-669 Torque Wrench Adapter is used, torque to 30 to 35 ft-lbs [41 to 47 N•m].

Crosshead Adjustment

Crosseheads are used to operate two valves with one rocker lever. The crosshead adjustment is provided to assure equal operation of each pair of valves and prevent strain from misalignment.

1. Loosen the valve crosshead adjusting screw locknut and back off the screw (4, Fig. 2-50) one turn.

Table 2-15: Injector Plunger Adjustment — Inch-lbs [N•m]

Cold Set	Hot Set
V-1710 Engines	
50 [0.6]	
NH-NT-743 and 855 Engines Cast Iron Rocker Housing	
48 [5.4]	72 [8.1]
Aluminum Rocker Housing	
71 [8.1]	72 [8.1]

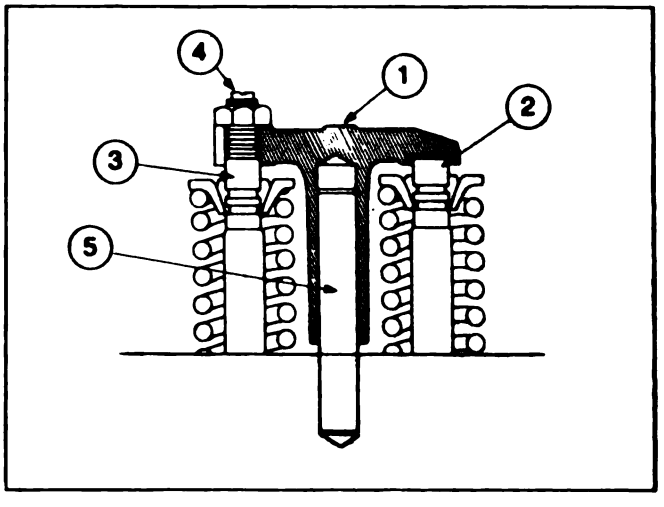

Fig. 2-50, (N21461). Valve crosshead

2. Use light finger pressure at the rocker lever contact surface (1) to hold the crosshead in contact with the valve stem (2).
3. Turn down the crosshead adjusting screw until it touches the valve stem (3).
4. Using ST-669 Torque Wrench Adapter, tighten the locknut to 22 to 26 ft-lbs [30 to 35 N•m]. If ST-669 is not available, hold the screws with a

Digitized by Google

screwdriver and tighten the locknuts to 25 to 30 ft-lbs [34 to 41 N•m].

5. Check the clearance between the crosshead and the valve spring retainer with a wire gauge. There must be a minimum of 0.020 inch [0.51 mm] clearance at this point.

Valve Adjustment

The same engine position used in adjusting the injectors is used for setting the intake and exhaust valves.

1. While adjusting the valves, make sure that the compression release, on those engines so equipped, is in the running position.
2. Loosen the locknut and back off the adjusting screw. Insert a feeler gauge between the rocker lever and crosshead. Turn the screw down until the lever just touches the gauge and lock the adjusting screw in this position with the locknut. Tighten the locknut to 40 to 45 ft-lbs [54 to 61 N•m] torque. When using ST-669 torque to 30 to 35 ft-lbs [41 to 47 N•m].
3. Always make final valve adjustment at stabilized engine lubricating oil temperature. See Table 2-16 for the appropriate valve clearances.

Table 2-16: Valve Clearances — Inch [mm]

Intake Valves Cold Set	Exhaust Valves Cold Set
V-1710 Engines	
0.014 [0.36]	0.027 [0.69]
NH-NT-743 and 855 Engines	
Cast Iron Rocker Housing	
0.016 [0.41]	0.029 [0.74]
Aluminum Rocker Housing	
0.014 [0.36]	0.027 [0.69]

Injector and Valve Adjustment Using 3375004 Dial Indicator Kit KT(A)-1150 Engines

This method involves adjusting the injector plunger travel with an accurate dial indicator. A check can be made of the adjustment without disturbing the locknut or screw setting. The valves can also be checked or set while adjusting the injectors by this method. See Table 2-17.

3375004 Injector Adjustment Kit is used to adjust the injectors with or without Jacobs Brake units installed.

It is essential that the injectors and valves be in correct adjustment at all times for the engine to operate properly.

Table 2-17: Injector and Valve Set Position KT(A)-1150

Bar In Direction	Pulley Position	Set Cylinder Injector	Valve
Start	A	3	5
Adv. To	B	6	3
Adv. To	C	2	6
Adv. To	A	4	2
Adv. To	B	1	4
Adv. To	C	5	1

Firing Order 1-5-3-6-2-4

One controls engine breathing; the other controls fuel delivery to the cylinders.

Operating adjustments must be made using the correct values as stated.

Injector and Valve Adjustment

Note: Do not use the fan to rotate the engine. Remove the shaft retainer key. Fig. 2-51, and press the shaft inward until the barring gear engages the drive gear; then advance. After the adjustments are complete retract the shaft and install the retainer key into the safety lock groove.

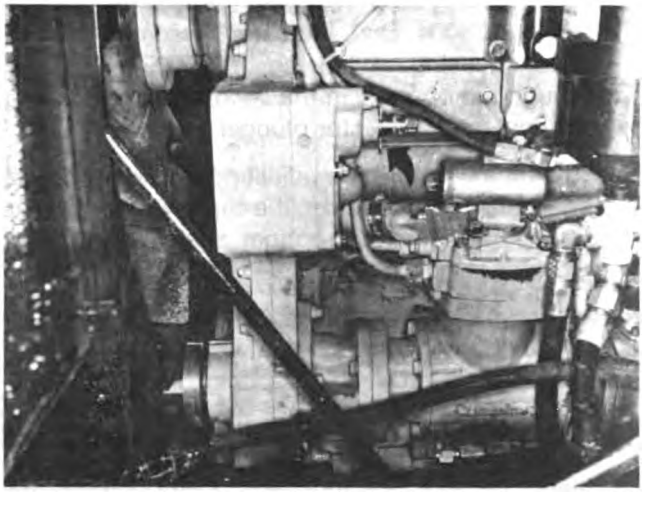

Fig. 2-51, (K11919). Engine barring arrangement — KT(A)-1150

Digitized by Google

Caution: The barring mechanism gear must be completely engaged when barring the engine to avoid damage to the teeth of the gear.

1. Bar the engine in the direction of rotation until "B" mark on the pulley, Fig. 2-52, is aligned with pointer on the gear case cover. In this position, both valve rocker levers for cylinder No. 3 must be free (valves closed). The injector plunger for cylinder No. 6 must be at top of travel; if not, bar the engine 360 degrees, realign the marks with the pointer.

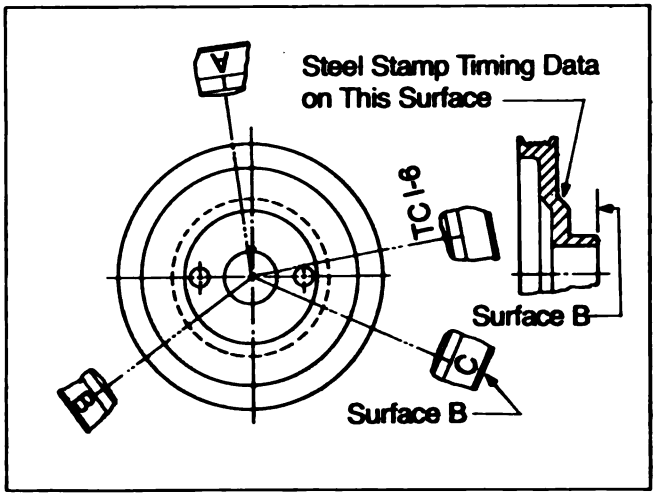

Fig. 2-52, (K11920). Accessory drive pulley marking — KT(A)-1150

Note: The injector and valves on any one (1) cylinder can not be set at the same valve set position. Example: If the rocker levers on No. 3 cylinder are free (valves closed) the injector plunger travel on No. 6 cylinder is to be adjusted. Any valve set position may be used as a starting point. See Table 2-17.

2. Install 3375004 Dial Indicator Assembly to the rocker housing, extension (3375005) must go through the opening in the Jacobs Brake housing and contact the injector plunger top, Fig. 2-53.

3. Screw the injector lever adjusting screw down until the plunger is bottomed in the cup, back off approximately 1/2 turn then bottom again, set the dial indicator at zero (0).

Note: Care must be taken to assure the injector plunger is correctly bottomed in the cup, without overtightening the adjusting screw, before setting the dial indicator.

4. Back the adjusting screw out until a reading of 0.304 inch [7.72 mm], reference Table 2-18, is obtained on the dial indicator. Snug tighten the locknut.

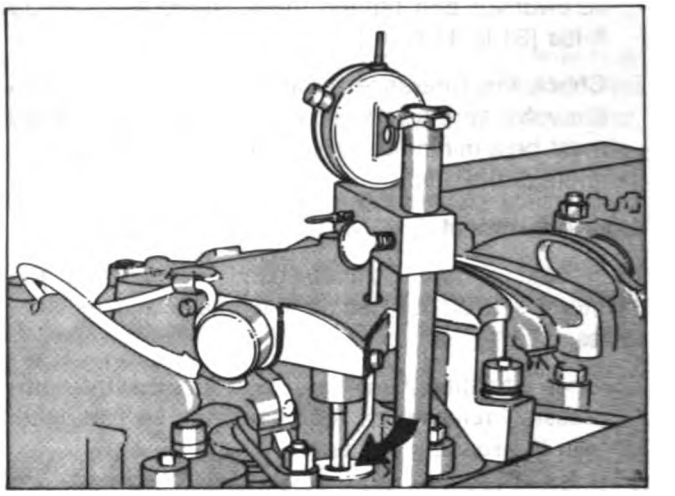

Fig. 2-53, (OM1061L). Dial indicator in place—extension in contact with plunger

5. Using 3375009 Rocker Lever Actuator Assembly and Support Plate, bottom the injector plunger, check the zero (0) setting. Fig. 2-54. Allow the plunger to rise slowly; the indicator must show the plunger travel to be within the range specified in Table 2-18.

Table 2-18: Adjustment Limits Using Dial Indicator Method Inch [mm] KT(A)-1150 Engines

Injector Plunger Travel	Valve Clearance Intake	Exhaust
0.304 ± 0.001 [7.72 ± 0.03]	0.014 [0.36]	0.027 [0.69]

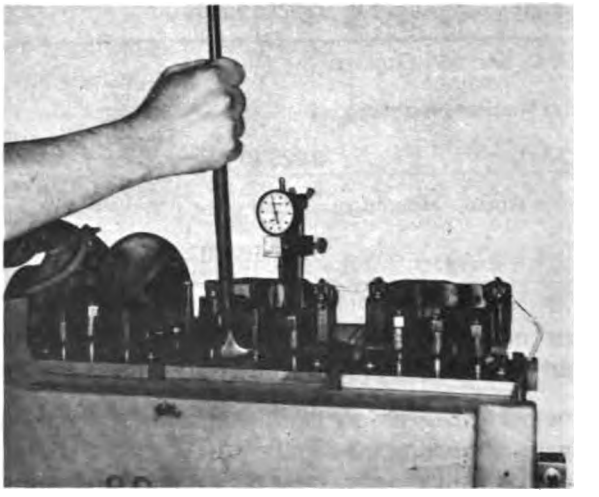

Fig. 2-54, (K114104). Actuating rocker lever

Digitized by Google

6. Using ST-669 Torque Wrench Adapter to hold the adjusting screw in position, torque the locknut to 30 to 35 ft-lbs [41 to 47 N•m]. If the torque wrench adapter is not used, hold the adjusting screw with a screwdriver, torque the locknuts to 40 to 45 ft-lbs [54 to 61 N•m].
7. Actuate the injector plunger several times as a check of the adjustment. Remove the dial indicator assembly.

Caution: If Jacobs Brake is not used, be sure the crossheads are adjusted before setting the valves. See Crosshead Adjustment following.

8. Adjust the valves on the appropriate cylinder as determined in Step 1 and Table 2-18. Tighten the locknuts the same as the injector locknut.
9. If Jacobs Brake is used, use 3375012 (0.018 inch [0.46 mm] thick) Feeler Gauge and 3375008 Torque Wrench Adapter, set the exhaust valve crosshead to Jacobs Brake slave piston clearance. Fig. 2-55.

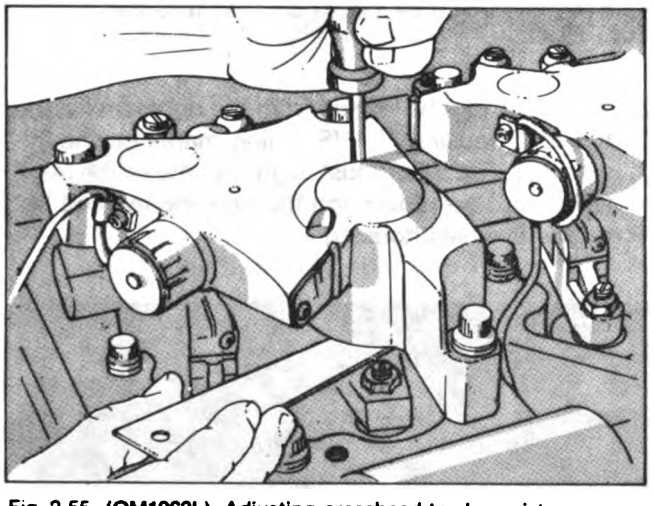

Fig. 2-55, (OM1063L). Adjusting crosshead to slave piston clearance

Note: Turn both adjusting screws alternately and evenly until the crosshead and feeler gauge contact the slave piston and the adjusting screws are bottomed on the valve stem. Back the adjusting screws out one-fourth (1/4) to one-half (1/2) turn. Starting with the outer adjusting screw (next to water manifold), then moving to the screw under the rocker lever, retighten gradually until the crosshead and feeler gauge contact the slave piston. Snug tighten the locknuts.

10. Hold the crosshead adjusting screws with a screwdriver, torque the locknuts 22 to 26 ft-lbs [20 to 35 N•m] using 3375008 Adapter and torque wrench.
11. See Table 2-18 for valve clearance values.
12. Repeat the adjustment procedure for each cylinder. See Table 2-17 for firing order and injector and valve set positions.

Crosshead Adjustment

Crossheads are used to operate two valves with one rocker lever. The crosshead adjustment is provided to assure equal operation of each pair of valves and prevent strain from misalignment.

1. Loosen the valve crosshead adjusting screw locknut and back off the screw (4, Fig. 2-56) one turn.

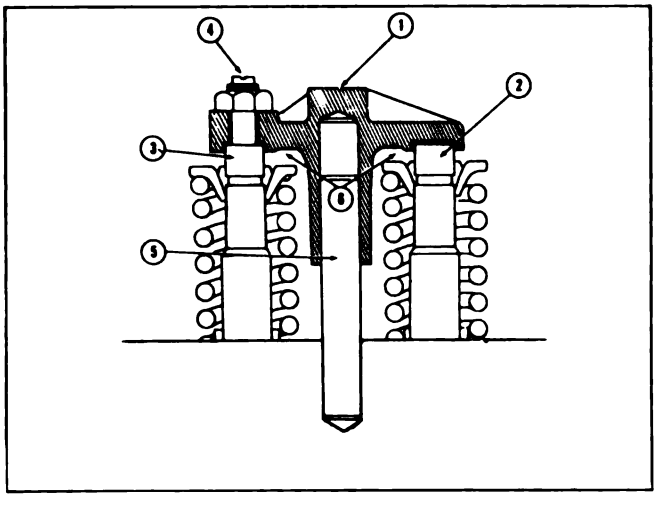

Fig. 2-56, (K21924). Valve crosshead

2. Use light finger pressure at the rocker lever contact surface (1) to hold the crosshead in contact with the valve stem (2) (without adjusting screw).
3. Turn down the crosshead adjusting screw until it touches the valve stem (3).
4. Using ST-669 Torque Wrench Adapter, tighten the locknuts to 22 to 26 ft-lbs [30 to 35 N•m]. If ST-669 is not available, hold the screws with a screwdriver and tighten the locknuts to 25 to 30 ft-lbs [34 to 41 N•m].
5. Check the clearance (6) between the crosshead and valve spring retainer with a wire gauge. There must be a minimum of 0.025 inch [0.64 mm] clearance at this point.

Injector and Valve Adjustment Using 3375004 Dial Indicator Kit (KT(A)-2300 and KTA-3067 Engines

Valve Set Mark Alignment

Digitized by Google

Note: KT(A)-2300 and KTA-3067 injectors, cross-heads and valves are adjusted to the same values. Refer to Fig's. 2-57 and 2-58 for specific cylinder arrangement and engine firing order.

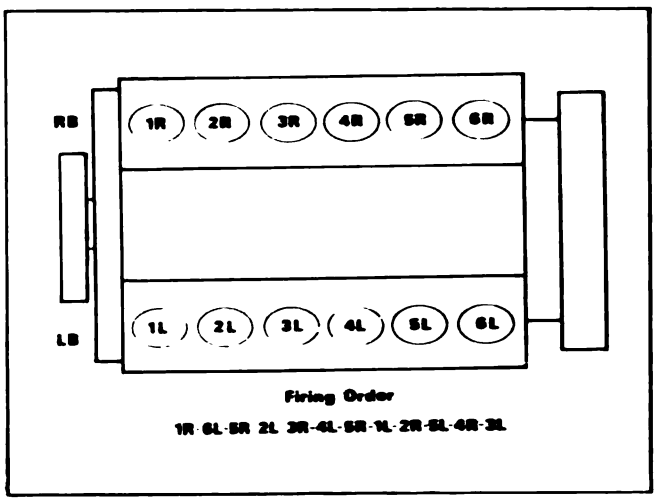

Fig. 2-57, (K21916). Cylinder arrangement and firing order — KT(A)-2300

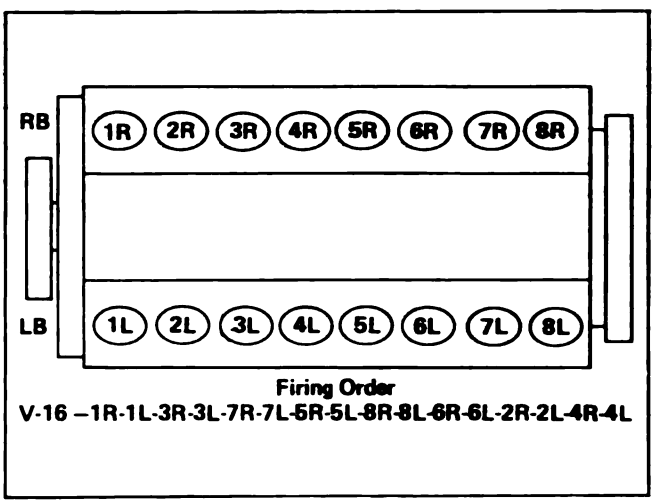

Fig. 2-58, (OM204). Cylinder arrangement and firing order — KTA-3067

Three locations are provided where valve and injector alignment marks may be viewed. Injector plunger travel and valves both may be set on one cylinder at the same valve set location. The crankshaft must be turned through two (2) complete revolutions to properly set all injector plunger travel and valves.

Note: The barring mechanism may be located on either the left bank or right bank at the flywheel housing. The cover plate on opening "A" or "C" directly above the barring mechanism must be removed when viewing the timing marks at the flywheel housing.

1. When viewing the engine at the vibration damper, Fig. 2-59, align the timing marks on the damper with the pointer on the gear case cover.

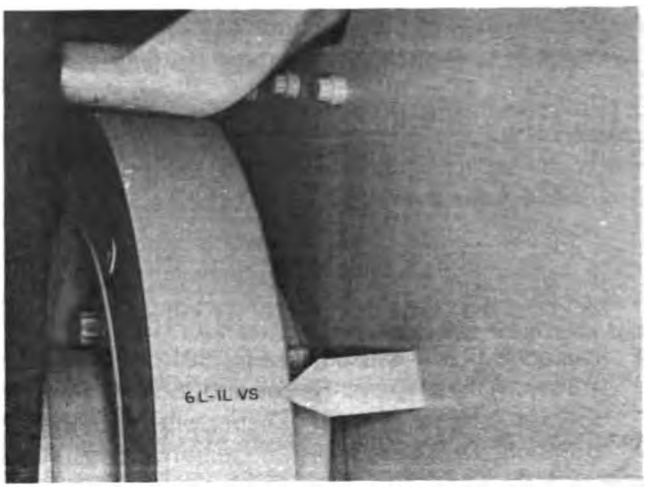

Fig. 2-59, (K21917). Valve set marks on vibration damper — KT(A)-2300

2. When barring the engine from the right bank at the flywheel housing "A" VS timing marks on the flywheel (1, Fig. 2-60) must align with the scribe mark (2) when viewed through the opening marked "A" on the flywheel housing.

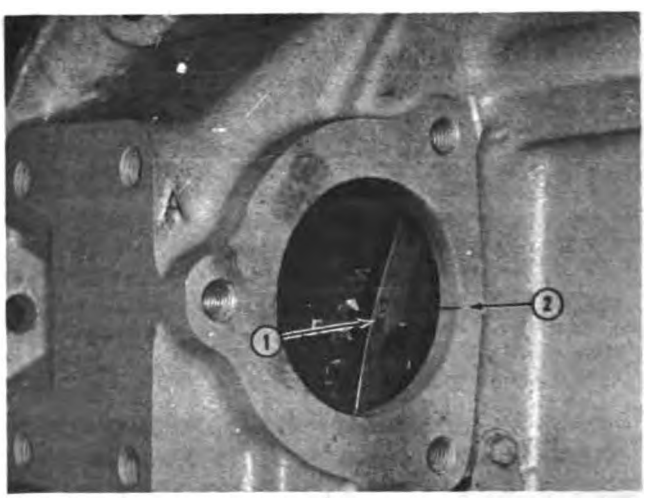

Fig. 2-60, (K21918). Valve set marks on right bank flywheel and housing — KT(A)-2300

3. When barring the engine from the left bank at the flywheel housing "C" VS timing marks on the flywheel (1, Fig. 2-16) must align with the scribe mark

Digitized by Google

(2) when viewed through the opening marked "C" on the flywheel housing.

Caution: When aligning valve set marks at either flywheel housing location, care must be taken to assure that "A" or "C" valve set marks on the flywheel match "A" or "C" marks on the flywheel housing opening.

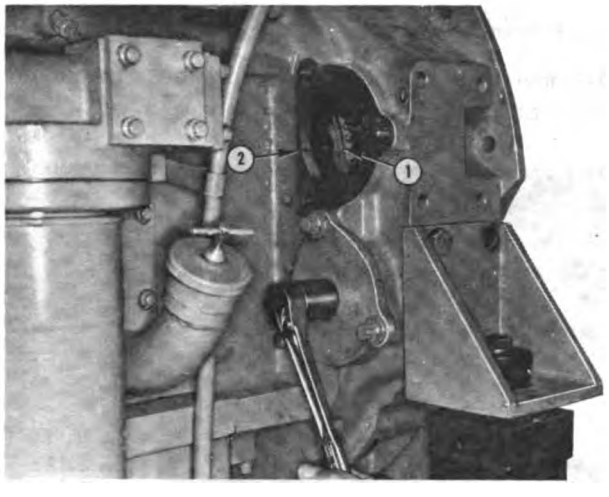

Fig. 2-61, (K21919). Engine barring device

Injector Plunger Adjustment

1. Bar the engine in the direction of rotation until the appropriate valve set mark is algined with the scribe mark on the flywheel housing or until a valve set mark on the vibration damper is aligned with the pointer on the gear case cover.

Note: Any valve set position may be used as a starting point when adjusting the injectors, crossheads and valves. Determine which of the two (2) cylinder indicated have both valves closed (rocker levers free). This cylinder is in position for injector plunger travel, crosshead and valve adjustment.

2. Set up 3375007 Indicator Support on the rocker lever housing, of the cylinder selected, with the indicator extension 3375005 on the injector plunger top. Fig. 2-62.

Note: Make sure the indicator extension is secure in the indicator stem and is not touching the rocker lever.

3. Using the rocker lever actuator, Fig. 2-63, depress the lever toward the injector until the plunger is bottomed in the cup to squeeze the oil film from the cup. Allow the injector plunger to rise, bottom again, hold in the bottom position and set the indicator at zero (0). Check the extension contact with the plunger top.

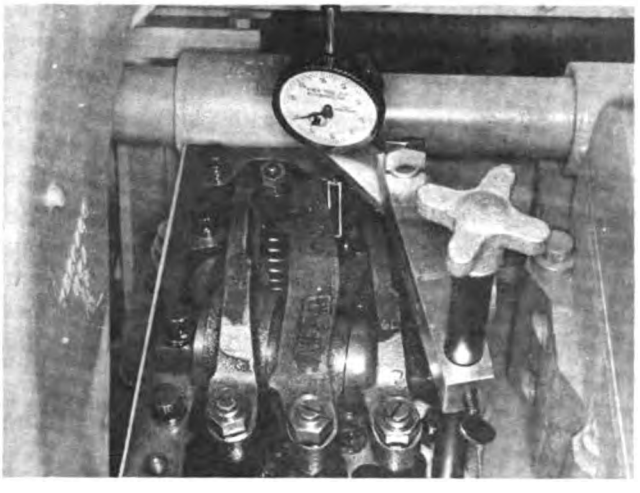

Fig. 2-62, (K21920). Dial indicator in place — extension in contact with plunger

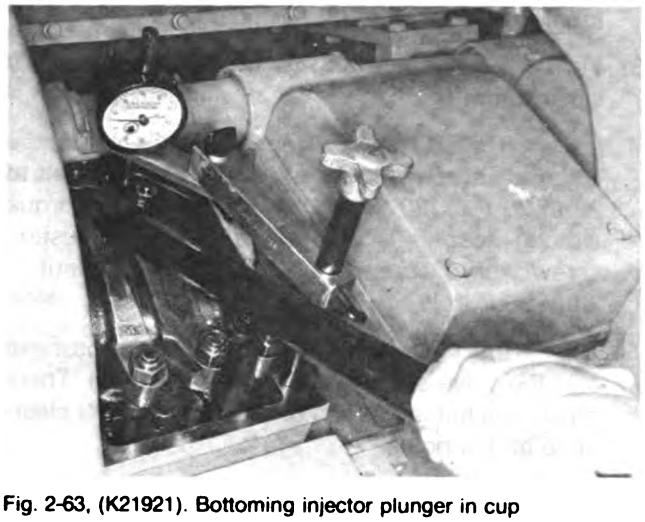

Fig. 2-63, (K21921). Bottoming injector plunger in cup

4. Allow the plunger to rise then bottom the plunger again, release the lever, the indicator must show travel as indicated in Table 2-19. Adjust as necessary.

5. If the adjusting screw locknuts were loosened for adjustment, tighten to 40 to 45 ft-lbs [54 to 61 N•m] torque and actuate the plunger several times as a

Table 2-19: Adjustment Limits Using Dial Indicator Method Inch [mm] KT(A)-2300 and KTA-3067 Engines

Injector Plunger Travel	Valve Clearance Intake	Exhaust
0.308 ± 0.001 [7.82 ± 0.03]	0.014 [0.36]	0.027 [0.69]

Digitized by Google

check of the adjustment. Tighten the locknuts to 30 to 35 ft-lbs [41 to 47 N•m] torque when using ST-669 Torque Wrench Adapter.

6. Remove 3375004 Kit.

Crosshead Adjustment

Crossheads are used to operate two valves with one rocker lever, an adjusting screw is provided to assure equal operation of each pair of valves and prevent strain from misalignment. Crosshead adjustment changes as a result of valve and seat wear during engine operation.

1. Loosen the adjusting screw locknut, back off the screw (4, Fig. 2-56) one turn.
2. Use light finger pressure at the rocker lever contact surface (1) to hold the crosshead in contact with the valve stem (2). The adjusting screw should not touch the valve stem (3) at this point.
3. Turn down the adjusting screw until it touches the valve stem (3).
4. Using 3375008 Troque Wrench Adapter to hold the adjusting screw in position, tighten the locknut to 22 to 26 ft-lb [30 to 35 N•m] torque. If the torque wrench adapter is not used, hold the adjusting screw with a screwdriver, tighten the locknut to 25 to 30 ft-lb [34 to 41 N•m] torque.
5. Check the clearance (6) between the crosshead and the valve spring retainer with a gauge. There must be a minimum of 0.025 inch [0.64 mm] clearance at this point.

Valve Adjustment

1. Insert the correct thickness feeler gauge between the rocker lever and the crosshead for the valves being adjusted. See Table 2-19 for valve clearance.

Note: Exhaust valves are toward the front of the engine in each cylinder head on the LB side and are toward the rear of the engine in each cylinder head on the RB side.

2. If adjustment is required, loosen the locknut and turn the adjusting screw down until the rocker lever just touches the feeler gauge; lock the adjusting screw in this position with the locknut.
3. Tighten the locknut to 40 to 45 ft-lb [54 to 61 N•m] torque. When using ST-669 Torque Wrench Adapter tighten the locknuts to 30 to 35 ft-lb [41 to 47 N•m] torque.

r completing the injector plunger travel, crosshead and valve adjustment on this cylinder bar the engine in the direction of rotation until the next valve set mark is aligned with the scribe mark at the flywheel housing or the pointer on the gear case cover; repeat the procedure. See Fig's. 2-57 and 2-58 for cylinder arrangement and engine firing order.

Change Oil

Change Aneroid Oil

1. Remove fill plug (1, Fig. 2-64) from the hole marked "Lub oil".

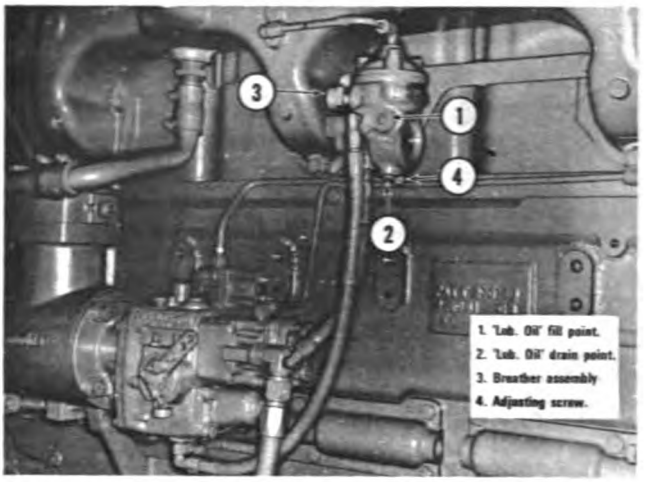

Fig. 2-64, (N10503). Aneroid

2. Remove the drain plug (2) from the bottom of the aneroid.
3. Replace the drain plug (2), fill the aneroid with clean engine lubricating oil. Replace the fill plug (1).

Replace Aneroid Breather

Remove and replace the aneroid breather (3, Fig. 2-64).

Change Hydraulic Governor Oil

Change oil in the hydraulic governor sump at each "C" Check.

Use the same grade of oil as used in the engine. See "Lubricating Oil Specifications"

Note: When temperature is extremely low, it may be necessary to dilute the lubricating oil with enough fuel oil or other special fluid to ensure free flow for satisfactory governor action.

Backside Idler Fan Drive

Inspect the idler assembly to be sure the pivot arm is

Digitized by Google

not binding. Use the following procedure.

1. Check the idler arm for freedom of movement.
   a. Grasp the pulley and move the pulley and arm away from the fan belt until the arm is nearly vertical.
   b. Release the arm and pulley and allow them to move back to their original position against the belts.
   c. The motion of the arm and pulley assembly should be free with no binding.
2. If the arm appears to be binding or tight, release the spring tension by placing a box end wrench over the square knob on the end of the pivot arm cap and while holding up on the box end wrench, remove the capscrew which holds the cap in place and allow the spring to unwind by allowing the box end wrench to rotate counterclockwise.
   a. With the spring unloaded, rotate the cap until the slots inside the cap align with the roll pins in the pivot arm, and remove the cap by pulling away from the engine.
   b. With the torsion spring unloaded, the pivot arm should rotate freely. If it does not appear free, then the bushings require replacement or re-packing with lubricant.
3. To inspect the bushings, loosen and remove the large hex head capscrew in the center of the pivot arm and remove the pivot arm from the pivot arm support.
   a. Inspect the shaft for corrosion and clean it as necessary with fine grade emery cloth.
   b. Inspect the bushings and thrust washers, clean and repack them with a good grade of lubricant such as:
      — lubriplate
      — moly-disulfide grease
   c. Inspect the O-ring on the pivot arm and replace it as necessary. Lubricate the O-ring prior to installation.
   d. Reassemble the pivot arm assembly cap using a new spring.
   e. Retension the new spring and lock the cap in place. Install a new fan belt and test the unit.

Clean Complete Oil Bath Air Cleaner

Steam

Steam clean the oil bath cleaner main body screens. Direct the stream jet from the air outlet side of the cleaner to wash dirt out in the opposite direction of air flow.

Solvent-Air Cleaning

1. Steam clean the exterior of the cleaner.
2. Remove the air cleaner oil cup.
3. Clamp the hose with the air line adapter to the air cleaner outlet.
4. Submerge the air cleaner in solvent.
5. Introduce air into the unit at 3 to 5 psi [21 to 34 kpa] and leave it in the washer 10 to 20 minutes.
6. Remove the cleaner from solvent and steam clean thoroughly to remove all traces of solvent. Dry with compressed air.

Caution: Failure to remove solvent may cause engine to overspeed until all solvent is sucked from the cleaner.

7. If the air cleaner is to be stored, dip it in lubricating oil to prevent rusting of the screens.

Note: If screens cannot be thoroughly cleaned by either method, or if the body is pierced or otherwise damaged, replace with a new air cleaner.

Digitized by Google

"D" Maintenance Checks

At each "D" Maintenance Check, perform all "A", "B" and "C" checks in addition to those following. Most of these checks should be performed by a Cummins Distributor or Dealer and where Cummins Shop Manuals are available for complete instructions.

Clean and Calibrate Injectors

Clean and calibrate the injectors regularly to prevent restriction of fuel delivery to the combustion chambers. Because of the special tools required for calibration, most owners and fleets find it more economical to let a Cummins Distributor do the cleaning and calibration operations.

To clean and calibrate the injectors, refer to Bulletin No. 3379071 and revisions thereto.

After removing the injectors from KT(A)-1150, KT(A)-2300 or KTA-3067 Engines for cleaning the seal seat should be removed from the injector (1, Fig. 2-65) or injector "well" for cleaning, examination and/or replacement as necessary.

Fig. 2-65, (K11918). Injector seal seat — all KT Engines

Caution: There must be only one (1) seal seat used in each injector "well". Use of more than one seal seat per injector will change the injector protrusion and cause combustion inefficiency.

Clean and Calibrate Fuel Pump

Check the fuel pump calibration on the engine if required. See the nearest Cummins Distributor or Dealer for values.

Clean and Calibrate Aneroid

1. Remove the flexible hose or tube from the aneroid cover to the intake manifold.
2. Remove the lead seal (if used), screws and aneroid cover.
3. Remove the bellows, piston, upper portion of the two piece shaft and the spring from the aneroid body.

Note: Count and record the amount of thread turns required to remove the upper shaft, piston and bellows from the lower shaft.

4. Place the hex portion of the shaft in a vise, snug tighten the vise, remove the self-locking nut, retaining washer and bellows.
5. Clean the parts in an approved cleaning solvent.
6. Position the new bellows over the shaft to the piston, secure with retaining washer and self-locking nut. Tighten the self-locking nut to 20 to 25 ft-lb [2.3 to 2.8 N•m] torque.
7. Install the spring, shaft, piston and bellows assembly into the aneroid body. As the two piece shaft is re-assembled, turn the upper portion of the shaft the same amount of thread turns as recorded during disassembly.

Caution: The amount of thread turns during installation must correspond with turns during removal to avoid changing the aneroid setting.

8. Align the holes in the bellows with the corresponding capscrew holes in the aneroid body.
9. Position the cover to the body; secure with flat-washers, lockwashers and fillister head screws.
10. Install a new seal. Refer to Bulletin No. 3379084 for sealing instructions and calibration procedure. Calibration, if required, must be performed by a Cummins Distributor on a fuel pump test stand.

Digitized by Google

11. Reinstall the flexible hose or tube from the aneroid cover to the intake manifold.

Inspect/Install Rebuilt Unit as Necessary

The following assemblies should be inspected at this time. The options are: inspect and reuse, rebuild per shop manual instructions, replace with a new or Distributor/Dealer exchange unit or Cummins Diesel ReCon Inc. unit.

Inspect Water Pump and Fan Hub

Inspect the water pump and fan hub for wobble and evidence of grease leakage. Replace with rebuilt pre-lubricated units as necessary.

Idler Pulley

Inspect, rebuild and repack the idler pulley with correct grease. Refer to the Engine Shop Manual for the rebuild and lubricating procedure for the idler pulley.

Inspect Turbocharger

Check Turbocharger Bearing Clearance

Check bearing clearances. This can be done without removing the turbocharger from the engine, by using a dial indicator to indicate the end-play of the rotor shaft and a feeler gauge to indicate the radial clearance. Fig. 2-66.

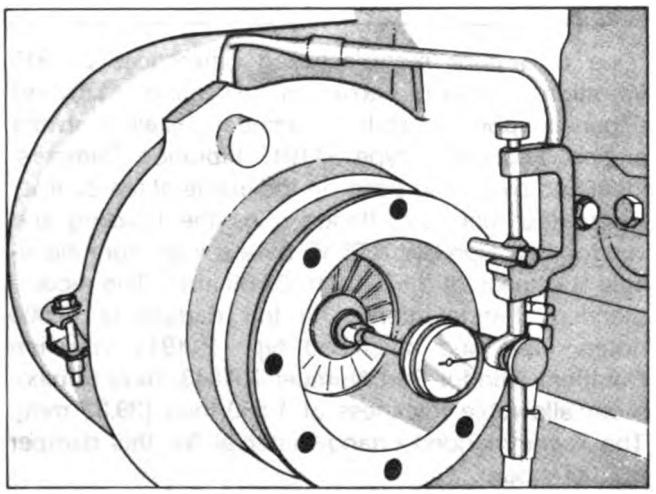

Fig. 2-66, (OM1065L). Check turbocharger bearing end clearance

Checking Procedure

1. Remove the exhaust and intake piping from the turbocharger to expose the ends of the rotor assembly.
2. Remove one capscrew from the front plate (compressor wheel end) and replace it with a long capscrew. Attach an indicator to the long capscrew and register the indicator point on the end of the rotor shaft. Push the shaft from end-to-end making note of the total indicator reading. Fig. 2-66. On T-50, ST-50 and VT-50 the end clearance should be 0.006 to 0.018 inch [0.15 to 0.46 mm].
   a. Push the wheel toward the side of the bore.
   b. Using a feeler gauge, check the distance between the tip of the wheel vanes and the bore. On T-50, ST-50 and VT-50 the clearance should be 0.003 to 0.033 inch [0.08 to 0.84 mm].
3. Check the radial clearance on the compressor wheel only.
4. If end clearances exceed the limits, remove the turbocharger from the engine and replace it with a new or rebuilt unit.
5. Check T-18A turbochargers as follows:
   a. For checking procedures refer to Service Manual Bulletin No. 3379055.
   b. End clearance should be 0.004 to 0.009 inch [0.10 to 0.23 mm], radial clearance should be 0.003 to 0.007 inch [0.08 to 0.18 mm]. If the clearances exceed these limits, remove the turbocharger(s) from the engine and replace them with new or rebuilt units.
6. Intall the exhaust and intake piping to the turbocharger(s).

Inspect Vibration Damper

Rubber Damper

The damper hub (1, Fig. 2-67) and the inertia member (2) are stamped with an index mark (3) to permit the detection of movement between the two components.

There should be no relative rotation between the hub and the inertia member resulting from engine operation.

Check for extrusion or rubber particles between the hub and the inertia member.

If there is evidence of inertia member movement and rubber extrusion, replace the damper.

Viscous Dampers

Check the damper for evidence of fluid loss, dents and wobble. Visually inspect the vibration damper's thick-

Digitized by Google

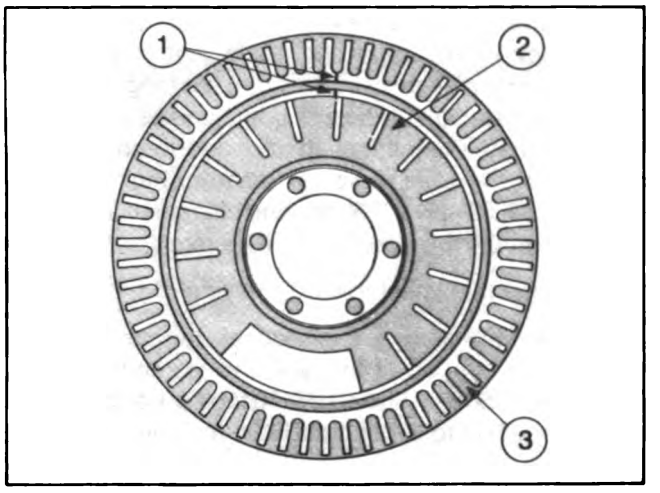

Fig. 2-67, (OM1066L). Vibration damper alignment marks

ness for any deformation or raising of the damper's front cover plate.

1. If a lack of space around the damper will not permit a visual inspection, run a finger around the inside and the outside of the front cover plate. If any variations or deformations are detected, remove the vibration damper and check as follows.
2. Remove paint, dirt and grime from the front and rear surface of the damper in four (4) equal spaced areas. Clean the surface with paint solvent and fine emery cloth.
3. Using a micrometer measure and record the thickness of the dampers at the four (4) areas cleaned in Step 3. Take the reading approximately 0.125 inch [3.18 mm] from the outside edge of the front cover plate.
4. Replace the damper if the variation of the four (4) readings exceed 0.010 inch [0.25 mm].

Viscous vibration dampers should be checked under the following conditions:

1. At any time the damper is removed from the engine.
2. At any time the engine experiences the following problems:
   a. Gear train failure
   b. Accessory drive shaft failure
   c. Crankshaft failure
   d. Damper mounting capscrew failure
   e. Flywheel mounting capscrew failure

Viscous vibration dampers should be replaced at our recommended change interval** regardless of condition. Gellation of the damper's silicon fluid occurs after extended service because of the high shear rates and resulting high temperatures imposed on the fluid during normal damper operation and, if the damper has not failed at this time, its failure is imminent.

Table 2-20: Viscous Vibration Damper Thickness Sepcifications — Inch [mm]

Damper Part Number	Maximum Allowable Thickness	**Recommended Change Interval
20633-1	1.981 [50.32]	9000
20634-1	1.644 [41.76]	9000
20835-1	1.142 [29.01]	9000
145789	1.663 [42.24]	6000
190213	1.663 [42.24]	6000
207531	2.574 [65.38]	18000
210758	1.550 [39.37]	6000
211268	1.663 [42.24]	6000
211914	1.981 [50.32]	9000
211915*		
211916	1.663 [42.24]	6000
217321	1.663 [42.24]	15000
217322	1.663 [42.24]	15000
217323	1.663 [42.24]	15000
218755	1.663 [42.24]	15000
3005973	2.574 [65.38]	18000
3015464	2.574 [65.38]	18000

*Due to vendor manufacturing differences 211915 Vibration Damper maximum allowable thickness depends upon the style of damper installed on the engine. Fabricated type 211915 Vibration Dampers, identified by a weld bead on the inside of the damper where the mounting flange joins the housing and vendor Part Number 709555, have a maximum allowable thickness of 1.570 inch [39.88 mm]. The recommended change interval for this damper is 12,000 hours. Cast and machined type 211915 Vibration Dampers (vendor Part Number 707843) have a maximum allowable thickness of 1.550 inch [39.37 mm]. The recommended change interval for this damper is 6,000 hours.

Air Compressor

Inspect the air compressor, check for evidence of oil or coolant leakage. Drain the air tank and check for air compressor lubricating oil carry over. Replace with a rebuilt unit as necessary.

Digitized by Google

Backside Idler Fan Drive

Remove the pivot arm assembly, disassemble and clean. Replace the Teflon bushings. Inspect the thrust washers and replace as necessary. Pack Teflon bushings with Aeroshell No. 5 Lubriplate (type 130AA) or Moly-disulfide grease, reassemble and install the idler assembly.

Clean Crankcase Breathers (KT(A)-2300 and KTA-3067 Engines

Remove the crankcase breathers from the right bank front and left bank rear of the cylinder block. Clean in an approved cleaning solvent, dry with compressed air, install the breather.

Digitized by Google

Seasonal Maintenance Checks

There are some maintenance checks which may or may not fall exactly into suggested maintenance schedule due to miles or hours operation but are performed once or twice each year.

Clean Cooling System (Fall)

The cooling system must be clean to do its work properly. Scale in the system slows down heat absorption from water jackets and heat rejection from the radiator. Use clean water that will not clog any of the hundreds of small passages in the radiator or water passages in the block. Clean the radiator cores, heater cores, oil cooler and block passages that have become clogged with scale and sediment by chemical cleaning, neutralizing and flushing.

Chemical Cleaning

If rust and scale have collected, the system must be chemically cleaned. Use a good cooling system cleaner such as sodium bisulphate or oxalic acid followed by neutralizer and flushing.

Pressure Flushing

Flush the radiator and the block before filling with antifreeze, or installing a water filter on a used or rebuilt engine.

When pressure flushing the radiator, open the upper and lower hose connections and screw the radiator cap on tight. Use the hose connection on both the upper and lower connections to make the operation easier. Attach a flushing gun nozzle to the lower hose connection and let water run until the radiator is full. When full, apply air pressure gradually to avoid damage to the core. Shut off the air and allow the radiator to refill; then apply air pressure. Repat until the water coming from the radiator is clean.

Caution: Do not use excessive air pressure while starting the water flow. This could split or damage the radiator core.

Sediment and dirt settle into pockets in the block as well as the radiator core. Remove the thermostats from the housing and flush the block with water. Partially restrict the lower opening until the block fills. Apply air pressure and force water from the lower opening. Repeat the process until the stream of water coming from the block is clean.

Replace Hose (As Required)

Inspect the oil filter and cooling system hose and hose connections for leaks and/or deterioration. Particles of deteriorated hose can be carried through the cooling system or lubricating system and restrict or clog small passages, especially radiator core, and lubricating oil cooler, and partially stop circulation. Replace as necessary.

Check Preheater Cold-Starting Aid (Fall)

Remove the 1/8 inch pipe plug from the manifold, near the glow plug, and check the operation of the preheater as described in Section 1.

Check Shutterstats and Thermatic Fans (Fall)

Shutterstats and thermatic fans must be set to operate in the same range as the thermostat with which they are used. Table 2-21 gives the settings for shutterstats and thermatic fans as normally used. The 180 to 195° F [82 to 91° C] thermostats are used only with shutterstats that are set to close at 187° F [86° C] and open at 195° F [91° C].

Check Thermostats and Seals (Fall)

Remove the thermostats from the thermostat housings and check for proper opening and closing temperature.

Most Cummins Engines are equipped with either medium 170 to 185° F [77 to 85° C] or low 160 to 175° F [71 to 79° C] and in a few cases high-range 180 to 195° F [82 to 91° C] thermostats, depending on engine application.

Steam Clean Engine (Spring)

Steam is the most satisfactory method of cleaning a dirty engine or piece of equipment. If steam is not available, use an approved solvent to wash the engine.

All electrical components and wiring should be protected from the full force of the cleaner spray nozzle.

Digitized by Google

Table 2-21: Thermal Control Settings

Control	Setting With 180 to 175°F [71 to 79°C]		Setting With 170 to 185°F [77 to 85°C]		Setting With 180 to 195°F [82 to 91°C]	
	Open	Close	Open	Close	Open	Close
Thermatic Fan	185°F [85°C]	170°F [77°C]	190°F [88°C]	182°F [82°C]		
Shutterstat	180°F [82°C]	172°F [78°C]	185°F [85°C]	177°F [81°C]	195°F [91°C]	187°F [86°C]
Modulating Shutters Open	175°F [79°C]		185°F [85°C]		[91°C]	

Checking Mountings (Spring)

Tighten Mounting Bolts and Nuts (As Required)

Engine mounting bolts will occasionally work loose and cause the engine supports and brackets to wear rapidly. Tighten all mounting bolts or nuts and replace any broken or lost bolts or capscrews.

Tighten Turbocharger Mounting Nuts (As Required)

Tighten all turbocharger mounting capscrews and nuts to be sure that they are holding securely. Tighten the mounting bolts and supports so that vibration will be at a minimum. Fig. 2-68.

Check Fan and Drive Pulley Mounting (Spring)

Check the fan to be sure it is securely mounted; tighten the capscrews as necessary. Check the fan for wobble or bent blades.

Check the fan hub and crankshaft drive pulley to be sure they are securely mounted. Check the fan hub pulley for looseness or wobble; if necessary, remove the fan pilot hub and tighten the shaft nut. Tighten the fan bracket capscrews.

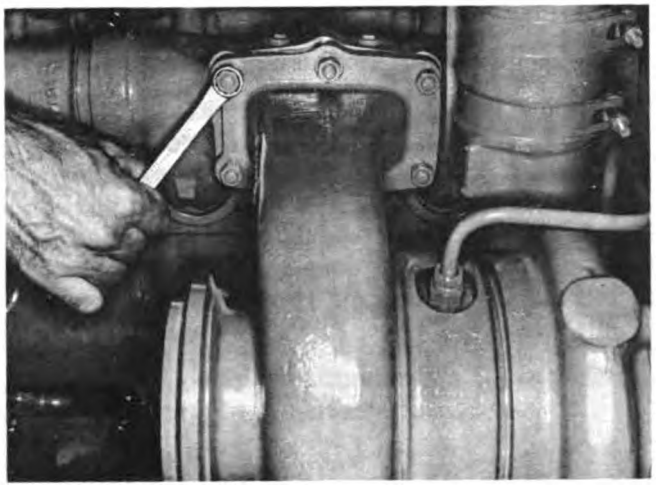

Fig. 2-68, (N11953). Tightening turbocharger mounting marks

Check Crankshaft End Clearance (Spring)

The crankshaft of a new or newly rebuilt engine must have end clearance as listed in Table 2-22. A worn engine must not be operated with more than the worn limit end clearance shown in the same table. If the engine is disassembled for repair, install new thrust rings.

Table 2-22: Crankshaft End Clearance — Inch [mm]

Engine Series	New Minimum	New Maximum	Worn Limit
H, NH, NT	0.007 [0.18]	0.017 [0.43]	0.022 [0.56]
V-903, VT-903	0.005 [0.13]	0.015 [0.38]	0.022 [0.56]
V-378, V-504 V-555	0.004 [0.10]	0.014 [0.36]	0.022 [0.56]
V-1710	0.006 [0.15]	0.013 [0.33]	0.018 [0.46]
KT(A)-1150	0.007 [0.18]	0.017 [0.43]	0.022 [0.56]
KT(A)-2300 KTA-3067	0.005 [0.13]	0.015 [0.38]	0.022 [0.56]

Digitized by Google

Caution: Do not pry against the outer damper ring.

The check can be made by attaching an indicator to rest against the damper or pulley, while prying against the front cover and inner part of the pulley or damper. End clearance must be present with the engine mounted in the unit and assembled to the transmission or converter.

Check Heat Exchanger Zinc Plugs (Spring)

Check the zinc plugs in the heat exchanger and change if they are badly eroded. Frequency of change depends upon the chemical reaction of raw water circulated through the heat exchanger.

Digitized by Google

Specifications and Torque

Providing and maintaining an adequate supply of clean, high-quality fuel, lubricating oil, grease and coolant in an engine is one way of ensuring long life and satisfactory performance.

Lubricant, Fuel and Coolant

The Functions of Lubricating Oil

The lubricating oil used in a Cummins engine must be multifunctional. It must perform the primary functions of:

Lubrication by providing a film between the moving parts to reduce wear and friction.

Cooling by serving as a heat transfer media to carry heat away from critical areas.

Sealing by filling in the uneven surfaces in the cylinder wall, valve stems and turbocharger oil seals.

Cleaning by holding contaminants in suspension to prevent a build up of deposits on the engine surfaces.

In addition, it must also provide:

Dampening and cushioning of components that operate under high stress, such as gears and push tubes.

Protection from oxidation and corrosion.

Hydraulic Action for components such as Jacobs Brake and hydraulic controls.

Engine lubricating oil must be changed when it can no longer perform its functions within an engine. Oil does not wear out, but it becomes contaminated to the point that it can no longer satisfactorily protect the engine. Contamination of the oil is a normal result of engine operation. During engine operation a wide variety of contaminants are introduced into the oil. Some of these are:

Byproducts of Engine Combustion — asphaltenes, soot and acids from partially burned fuel.

Acids, varnish and sludge which are formed as a result of the oxidation of the oil as it breaks down or decomposes.

Dirt entering the engine through the combustion air, fuel, while adding or changing lubricating oil.

The oil must have an additive package to combat these contaminates. The package generally consists of:

Detergents/Dispersants which keep insoluble matter in suspension until they are filtered from the oil or are removed with the oil change. This prevents sludge and carbon deposits from forming in the engine.

Inhibitors to maintain the stability of the oil, prevent acids from attacking metal surfaces and prevent rust during the periods the engine is not operating.

Other Additives that enable the oil to lubricate highly loaded areas, prevent scuffing and seizing, control foaming and prevent air retention in the oil.

Oil Performance Classification System

The American Petroleum Institute (API), The American Society for Testing and Materials (ASTM) and the Society of Automotive Engineers (SAE) have jointly developed and maintained a system for classifying lubricating oil by performance categories. The following are brief descriptions of the API categories used in the Cummins oil performance recommendations.

CC (Equivalent to MIL-L-2104B.) This category describes oils meeting the requirements of the military specification MIL-L-2104B. These oils provide low temperature protection from sludge and rust and are designed to perform moderately well at high temperature. For moderate-duty service.

CD (Equivalent to Series 3 and MIL-L-45199B.) This category described oils meeting the requirements of the Series 3 specification and MIL-L-45199B. These

Digitized by Google

oils provide protection from deposits and oxidation at high temperature. For severe-duty service.

SC (Equivalent to 1964 MS Oils). This category describes oils meeting the 1964-1967 requirements of automobile manufacturers. Primarily for use in automobiles, it provides low temperature anti-sludge and anti-rust protection required in a light-duty diesel service such as a stop-and-go operation.

SD (Equivalent to 1968-1971 MS Oils.) This category describes oils meeting the 1964-1967 requirements of automobile manufacturers. Primarily for use in automobiles, it provides low temperature anti-sludge and anti-rust protection required in a light-duty diesel service such as a stop-and-go operation. It may be substituted for SC category.

SE (Equivalent to 1972 MS Oils.) This category describes oils meeting the 1972 requirements of automobile manufacturers. Primarily for use in automobiles, it provides protection from high temperature oxidation and low temperature anti-sludge and anti-rust as required in a light-duty diesel service such as a stop-and-go operation. It may be substituted for SC category.

CB (No equivalent Specification.) These oils were usually referred to as Supplement 1 oils. This category describes oils which met the requirements of the military specification MIL-L-2104A where the diesel engine test was run using fuel with a high sulphur content. For moderate duty service. Oils in this performance category should not be used in Cummins Engines.

The Engine Manufacturers Association (EMA) publishes a book entitled "Lubricating Oils Data Book". Copies may be purchased from the Engine Manufacturers Association, 111 E. Wacker Drive, Chicago, Ill. 60601. This book lists commercially available oils by oil company and brand name with the API performance categories met by each brand.

Oil Performance Recommendations

Cummins Engine Co., Inc. does not recommend the use of any specific brand of engine lubricating oil. Cummins recommends the use of oil designed to meet the following API categories:

CC for use in naturally aspirated engines.

CC/CD for use in turbocharged engines.

CC/SC for use only in engines that operate in a light-duty service including standby and emergency operation.

Dual Categories are used where more protection is required than is provided by a single category. CC/CD and CC/SC categories indicate that the oil is blended to meet the performance level required by each single category.

A **sulfated ash limit** has been placed on lubricating oil for use in Cummins engines. Past experience has shown that oils with a high ash content may produce deposits on valves that can progress to guttering and valve burning. A maximum sulfated ash content of 1.85 mass % is recommended for all oil used in Cummins engines except engines fueled with natural gas. For natural gas engines a sulfated ash range of 0.03 to 0.85 mass % is recommended. Cummins Engine Co., Inc., does not recommend the use of ashless oils for natural gas engines. When the ash content is below .15 mass %, the ash should represent organo-metallic anti-wear additives.

Break-In Oils

Special "break-in" lubricating oils are not recommended for new or rebuilt Cummins engines. Use the same lubricating oils used in normal engine operation.

Viscosity Recommendations

The viscosity of an oil is a measure of its resistance to flow. The Society of Automotive Engineers has classified engine oils in viscosity grades; Table 3-1 shows the viscosity range for these grades. Oils that meet the low temperature (0° F [—18° C]) requirement carry a grade designation with a "W" suffix. Oils that meet both the low and high temperature requirements are referred to as multigrade or multiviscosity grade oils.

Multigraded oils are generally produced by adding viscosity-index improver additives to retard the thinning effects a low viscosity base oil will experience at engine operating temperatures. Multigraded oils that meet the requirements of the API classifications, are recommended for use in Cummins engines.

Cummins recommends the use of multigraded lubricating oil with the viscosity grades shown in Table 3-2. Table 3-2 shows Cummins viscosity grade recommendations at various ambient temperatures. The only viscosity grades recommended are those shown in this table.

Cummins has found that the use of multigraded lubri-

Digitized by Google

cating oil improves oil consumption control, improved engine cranking in cold conditions while maintaining lubrication at high operating temperatures and may contribute to improved fuel consumption. Cummins does not recommend the use of single grade lubricating oils. In the event that the recommended multigrade oil is not available, single grade oils may be substituted.

Caution: When single grade oil is used, be sure that the oil will be operating within the temperature ranges shown in Table 3-3.

The primary criterion for selecting an oil viscosity grade is the lowest temperature the oil will experience while in the engine oil sump. Bearing problems can be caused by the lack of lubrication during the cranking and start up of a cold engine when the oil being used is too viscous to flow properly. Change to a lower viscosity grade of oil as the temperature of the oil in the engine oil sump reaches the lower end of the ranges shown in Table 3-2.

Table 3-1: SAE Viscosity Numbers for Lubricating Oils

SAE Viscosity Grade	Viscosity Range: millipascal-second, mPa•s (centipoise, cP) @ 0° F [-18° C] maximum	Viscosity Range: millimetre²/second, mm²/s (centistoke, cSt) @ 212° F [100° C] minimum	maximum
5W	1250	3.8	—
10W	2500	4.1	—
15W	5000	5.6	—
20W	10000	5.6	—
20	—	5.6	less than 9.3
30	—	9.3	less than 12.5
40	—	12.5	less than 16.3
50	—	16.3	less than 21.9

1. SAE Recommended Practice J300d
2. 1 mPa•s = 1 cP
3. 1 mm²/s = 1 cSt

Table 3-2: Cummins Recommendations for Viscosity Grade vs. Ambient Temperature

SAE Viscosity Grade*	Ambient Temperature**
Recommended	
10W - 30	-13° F to 95° F [-25° C to 35° C]
15W - 40	14° F and above [-10° C and above)
20W - 40	32° F and above [0° C and above]

*SAE-5W mineral oils should not be used.
**For temperatures consistently below -13° F [-25° C] See Table 4.

Table 3-3: Alternate Oil Grades

10W	-13° F to 32° F [-25° C to 0° C]
20W	23° F to 68° F [-5° C to 20° C]
20W-20*	23° F to 68° F [-5° C to 20° C]
20	23° F to 68° F [-5° C to 20° C]
30	39° F and above [4° C and above]
40	50° F and above [10° C and above]

*20W-20 is not considered a multigrade even though it meets two grades.

Digitized by Google

Synthetic Lubricating Oil

Synthetic oils for use in diesel engines are primarily blended from synthesized hydrocarbons and esters. These base oils are manufactured by chemically reacting lower molecular weight materials to produce a lubricant that has planned predictable properties.

Synthetic oil was developed for use in an extreme environment where the ambient temperature may be as low as —50° F [—45° C] and extremely high engine temperatures at up to 400° F [205° C]. Under these extreme conditions petroleum base stock lubricants (mineral oil) do not perform satisfactorily.

Cummins Engine Co., Inc. recommends synthetic lubricating oil for use in Cummins engines operating in areas where the ambient temperature is consistently lower than —13° F [—25° C]. Synthetic lubricating oils may be used at higher ambient temperatures provided they meet the appropriate API Service categories and viscosity grades.

Cummins Engine Co., Inc. recommends the same oil change interval be followed for synthetic lubricating oil as that for petroleum based lubricating oil.

Arctic Operations

For engine operation in areas where the ambient temperature is consistently below —13° F [—25° C] and where there is no provision to keep the engine warm when it is not operating, the lubricating oil should meet the requirements in the following table. Oil meeting these requirements usually have synthetic base stocks. SAE 5W viscosity grade synthetic oils may be used provided they meet the minimum viscosity requirement at 212° F [100° C].

Table 3-4: Arctic Oil Recommendations

Parameter (Test Method)	Specifications
Performance Quality Level	API Classification CC/SC API Classification CC/CD
Viscosity	10,000 mPa•s Max. at —31° F [—35° C] 4.1 mm²/s Min. at 212° F [100° C]
Pour Point (ASTM D-97)	Min. of 9° F [5° C] Below the Lowest Expected Ambient Temperature
Sulfated Ash Content (ASTM D-874)	1.85% by Weight Maximum

Digitized by Google

Grease

Cummins Engine Company, Inc., recommends use of grease meeting the specifications of MIL-G-3545, excluding those of sodium or soda soap thickeners. Contact the lubricant supplier for grease meeting these specifications.

TEST	TEST PROCEDURE
High-Temperature Performance	
Dropping point, ° F.	ASTM D 2265 350 min.
Bearing life, hours at 300° F 10,000 rpm	*FTM 331 600 min.
Low-Temperature Properties	
Torque, GCM	ASTM D 1478
Start at 0° F	15,000 max.
Run at 0° F	5,000 max.
Rust Protection and Water Resistance	
Rust Test	ASTM D 1743 Pass
Water resistance, %	ASTM D 1264 20 max.
Stability	
Oil separation, % 30 hours @ 212° F	*FTM 321 5 max.
Penetration	
Worked	ASTM D 217 250-300
Bomb Test, PSI Drop	ASTM D 942
100 Hours	10 max.
500 Hours	25 max.
Copper, Corrosion	*FTM 5309 Pass
Dirt Count, Particles/cc	*FTM 3005
25 Micron +	5,000 max.
75 Micron +	1,000 max.
125 Micron +	None
Rubber Swell	*FTM 3603 10 max.

* Federal Test Method Standard No. 791a.

Caution: Do not mix brands of grease. Damage to the bearings may result. Excessive lubrication is as harmful as inadequate lubrication. After lubricating the fan hub, replace both pipe plugs. Use of fittings will allow the lubricant to be thrown out, due to rotative speed.

Digitized by Google

Fuel Oil

Cummins diesel engines have been developed to take advantage of the high energy content and generally lower cost of No. 2 Diesel Fuels. Experience has shown that a Cummins diesel engine will also operate satisfactorily on No. 1 fuels or other fuels within the following specifications.

Recommended Fuel Oil Properties:	
Viscosity (ASTM D-445)	1.3 to 5.8 CentiStoke [1.3 to 5.8 mm^2 Per Second] at 104° F [40° C].
Cetane Number (ASTM D-613)	40 minimum except in cold weather or in service with prolonged low loads, a higher cetane number is desirable.
Sulfur Content (ASTM D-129 or 1552)	Not to exceed 1% by weight.
Water and Sediment (ASTM D-1796)	Not to exceed 0.1% by weight.
Carbon Residue (Ramsbottom ASTM D-524 or D-189)	Not to exceed 0.25% by weight on 10% residue.
Flash Point (ASTM D-93)	125° F [52° C] minimum. Certain marine registries require higher flash points.
Density (ASTM D-287)	30 to 42° F [—1 to 6° C] A.P.I. at 60° F [16° C] (0.816 to 0.876 Sp. Gr.)
Cloud Point (ASTM D-97)	10° F [—12° C] below lowest temperature expected to operate at.
Active Sulfur-Copper Strip-Corrosion (ASTM D-130)	Not to exceed No. 2 rating after 3 hours at 122° F [50° C].
Ash (ASTM D-482)	Not to exceed 0.02% by weight.
Distillation (ASTM D-86)	The distillation curve should be smooth and continuous. At least 90% of the fuel should evaporate at less than 680° F [360° C]. All of the fuel should evaporate at less than 725° F [385° C].

Digitized by Google

Coolant

Water should be clean and free of any corrosive chemicals such as chloride, sulphates and acids. It should be kept slightly alkaline with a pH value range of 8.5 to 10.5. Any water which is suitable for drinking can be treated as described in the following paragraphs for use in an engine.

Maintain the Fleetguard DCA Water Filter on the engine. The filter bypasses a small amount of coolant from the system via a filtering and treating element which must be replaced periodically.

1. In summer, with no antifreeze, fill the system with water.
2. In winter, select an antifreeze and use with water as required by temperature.

Note: Some antifreeze also contains anti-leak additives such as inert inorganic fibers, polymer particles or ginger root. These types of antifreeze should not be used in conjunction with the water filter. The filter element will filter out the additives and/or become clogged and ineffective.

3. Install or replace the DCA Water Filter as follows and as recommended in Section 2.

New Engines Going Into Service Equipped With DCA Water Filters

1. New engines shipped from Cummins Engine Company are equipped with water filters containing a DCA precharge element. This element is compatible with plain water or all permanent-type antifreeze except Methoxy Propanol. See Table 3-5 for Methoxy Propanol precharge instructions.
2. At the first "B" Check (oil change period) the DCA precharge element should be changed to DCA Service Element. See Table 3-5.
3. Replace the DCA Service Element at each succeeding "B" Check.
   a. If make-up coolant must be added between element changes, use coolant from a pretreated supply, see "Make-Up Coolant Specifications", Section 2.
   b. Each time the system is drained, precharge per coolant specifications, Table 3-5.
4. The service element may be changed at the "C" Check if 3300858 (DCA-4L) direct chemical additive is added to the cooling system at each "B" Check between service element changes. One bottle of direct additive should be used for every 10 gallons of cooling system capacity. Add one bottle for every 15-gallon capacity if methoxy propanol antifreeze is used in the cooling system.
5. To ensure adequate corrosion protection, have the coolant checked at each third element change or more often. See "Check Engine Coolant", Section 2.

Table 3-5: Spin-on Type DCA Water Filter

Cooling System	Ethylene Glycol Base Antifreeze			Methoxy Propanol Base Antifreeze		
Capacity (U.S. Gallons)	DCA-4L Precharge (P/N 3300858)		Service Element(s)	DCA-4L Precharge (P/N 3300858)		Service Element(s)
0-8	1		WF-2010 (P/N 299080)	1		WF-2011 (P/N 3300721)
9-15	2		WF-2010	2		WF-2011
16-30	5		WF-2010	4		WF-2011
31-60	10	(2)	WF-2010	8	(2)	WF-2011
35-90 (V-1710)	12	(2)	WF-2016 (P/N 299086)	8	(2)	WF-2017 (P/N 3300724)
70-90 (KT-2300	16	(2)	WF-2010	16	(2)	WF-2011

Digitized by Google

Capscrew Markings and Torque Values

Current Usage	Much Used	Much Used	Used at Times	Used at Times
Minimum Tensile Strength PSI MPa	To 1/2–69,000 [476] To 3/4–64,000 [421] To 1–55,000 [379]	To 3/4–120,000 [827] To 1–115,000 [793]	To 5/8–140,000 [965] To 3/4–133,000 [917]	150,000 [1 034]
Quality of Material	**Indeterminate**	**Minimum Commercial**	**Medium Commercial**	**Best Commercial**
SAE Grade Number	**1 or 2**	**5**	**6 or 7**	**8**
Capscrew Head Markings Manufacturer's marks may vary These are all SAE Grade 5 (3 line)		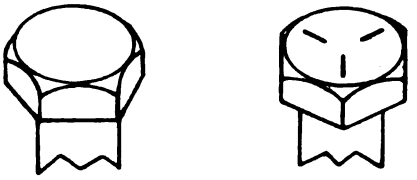		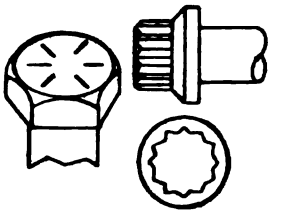

Capscrew Body Size (Inches) – (Thread)	Torque Ft-Lbs [N•m]	Torque Ft-Lbs [N•m]	Torque Ft-Lbs [N•m]	Torque Ft-Lbs [N•m]
1/4 – 20	5 [7]	8 [11]	10 [14]	12 [16]
– 28	6 [8]	10 [14]		14 [19]
5/16 – 18	11 [15]	17 [23]	19 [26]	24 [33]
– 24	13 [18]	19 [26]		27 [37]
3/8 – 16	18 [24]	31 [42]	34 [46]	44 [60]
– 24	20 [27]	35 [47]		49 [66]
7/16 – 14	28 [38]	49 [66]	55 [75]	70 [95]
– 20	30 [41]	55 [75]		78 [106]
1/2 – 13	39 [53]	75 [102]	85 [115]	105 [142]
– 20	41 [56]	85 [115]		120 [163]
9/16 – 12	51 [69]	110 [149]	120 [163]	155 [210]
– 18	55 [75]	120 [163]		170 [231]
5/8 – 11	83 [113]	150 [203]	167 [226]	210 [285]
– 18	95 [129]	170 [231]		240 [325]
3/4 – 10	105 [142]	270 [366]	280 [380]	375 [508]
– 16	115 [156]	295 [400]		420 [569]
7/8 – 9	160 [217]	395 [536]	440 [597]	605 [820]
– 14	175 [237]	435 [590]		675 [915]
1 – 8	235 [319]	590 [800]	660 [895]	910 [1234]
– 14	250 [339]	660 [895]		990 [1342]

Notes:

1. Always use the torque values listed above when specific torque values are not available.
2. Do not use above values in place of those specified in other sections of this manual; special attention should be observed when using SAE Grade 6, 7 and 8 capscrews.
3. The above is based on use of clean, dry threads.
4. Reduce torque by 10% when engine oil is used as a lubricant.
5. Reduce torque by 20% if new plated capscrews are used.
6. Capscrews threaded into aluminum may require reductions in torque of 30% or more of Grade 5 capscrews torque and must attain two capscrew diameters of thread engagement.

Caution: **If replacement capscrews are of a higher grade than originally supplied, adhere to torque specifications for replacement.**

Digitized by Google

Troubleshooting

Troubleshooting is an organized study of the problem and a planned method of procedure for investigation and correction of the difficulty. The chart on the following page includes some of the problems that an operator may encounter during the service life of a Cummins diesel engine.

Cummins Diesel Engines

The chart does not give all the answers for correction of the problems listed, but it is meant to stimulate a train of thought and indicate a work procedure directed toward the source of trouble. To use the troubleshooting chart, find the complaint at the top of the chart; then follow down that column until you come to a black dot. Refer to the left of the dot for the possible cause.

Think Before Acting

Study the problem thoroughly. Ask these questions:

1. What were the warning signs preceding the trouble?
2. What previous repair and maintenance work has been done?
3. Has similar trouble occurred before?
4. If the engine still runs, is it safe to continue running it to make further checks?

Do Easiest Things First

Most troubles are simple and easily corrected; examples are "low-power" complaints caused by loose throttle linkage or dirty fuel filters, "excessive lube oil consumption" caused by leaking gaskets or connections, etc.

Always check the easiest and obvious things first. Following this simple rule will save time and trouble.

Double-Check Before Beginning Disassembly Operations

The source of most engine troubles can be traced not to one part alone but to the relationship of one part with another. For instance, excessive fuel consumption may not be due to an incorrectly adjusted fuel pump, but instead to a clogged air cleaner or possibly a restricted exhaust passage, causing excessive back pressure. Too often, engines are completely disassembled in search of the cause of a certain complaint and all evidence is destroyed during disassembly operations. Check again to be sure an easy solution to the problem has not been overlooked.

Find And Correct Basic Cause Of Trouble

After a mechanical failure has been corrected, be sure to locate and correct the cause of the trouble so the same failure will not be repeated. A complaint of "sticking injector plungers" is corrected by replacing the faulty injectors, but something caused the plungers to stick. The cause may be improper injector adjustment, or more often, water in the fuel.

Tools And Procedures To Correct A Complaint

Tools and procedures to correct the complaints found in this Troubleshooting section are available from Cummins distributors and dealers. A list of publications, by bulletin numbers, is included in the back of this manual in the form of a purchase order. This list includes all engine model shop and and engine repair and rebuild manuals.

AFC Fuel Pump Adjustments

All AFC fuel pump adjustments are specified for calibration on a fuel pump test stand and not to be made on the engine. Contact your nearest authorized Cummins distributor to perform maintenance, if required.

Digitized by Google

Trouble Shooting
Cummins Engines

CAUSES \ COMPLAINTS	Hard Starting or Failure to Start	Engine Misses	Excessive Black Smoke at Idle	Excessive White Smoke at Idle	Excessive Smoke Under Load	Excessive-Acceleration Smoke	Low Power or Loss of Power	Cannot Reach Governed RPM	Low Air Output	Sluggish Engine Acceleration	Excessive Fuel Consumption	Poor Deceleration	Erratic Idle Speed	Engine Dies	Surging at Governed RPM	Excessive Oil Consumption	Crankcase Sludge	Dilution	Low Oil Pressure	Coolant Temperature Too Low	Coolant Temperature too High	Oil Temperature too High	Piston, Liner and Ring Wear	Wear of Bearings and Journals	Worn Valves and Guides	Fuel Knocks (Combustion Noise)	Mechanical Knocks	Gear Train Whine	vt Engine Vibration	Excessive Noise	Excessive Crankcase Pressure
Air System																															
Restricted Air Intake				●		●	●		●		●																				
High Exhaust Back Pressure				●		●	●				●																				
Thin Air in Hot Weather or High Altitude				●		●	●		●																						
Air Leaks Between Cleaner and Engine						●	●		●													●	●	●							
Dirty Turbocharger Compressor				●		●	●		●		●																				
Improper Use of Starter Aid/Air Temp.	●		●																			●	●		●						
Fuel System																															
Stuck Drain Valve			●	●		●					●	●																	●		
Out of Fuel or Fuel Shut Off Closed	●													●																	
Poor Quality Fuel/Grade Fuel	●	●		●	●		●				●		●	●			●								●						
Air Leaks in Suction Lines	●	●					●			●		●	●	●	●										●						
Restricted Fuel Lines	●	●	●		●	●	●			●	●	●																			
External or Internal Fuel Leaks							●				●			●				●													
Plugged Injector Spray Holes		●	●		●	●	●				●																				
Broken Fuel Pump Drive Shaft	●													●																	
Scored Gear Pump or Worn Gears	●						●																								
Wrong Injector Cups			●	●	●	●	●				●																				
Cracked Injector Body or Cup	●	●	●	●	●	●	●				●							●							●						
Damaged Injector O-Ring		●					●				●	●						●													
Excessive Injector Check Ball Leakage												●																			
Throttle Linkage or Adjustment							●	●				●	●	●	●																
Incorrectly Assembled Idle Springs												●	●	●																	
Incorrectly Assembled Governor Weights													●	●	●																
High-Speed Governor Set Too Low							●	●																							
Water in Fuel and/or Waxing	●	●						●		●			●	●																	
AFC Calibration Incorrect	●					●	●			●																			●		
Damaged/Worn AFC Plunger Seal/Barrel										●																					
Fuel Pump Calibration Incorrect					●	●	●	●		●	●	●	●	●															●		
Injector Flow Incorrect		●			●	●	●	●		●	●																				
Plugged ASA							●			●																					
ASA/AFC Air Leak, Bellows							●			●																					
ASA Reverse Flow Valve Stuck Open						●																							●		
Lubricating System																															
External and Internal Oil Leaks																●			●												
Dirty Oil Filter																	●		●					●	●						
Faulty Cylinder Oil Control			●													●		●					●								
Clogged Oil Drillings																			●				●	●	●						
Oil Suction Line Restriction																			●				●	●	●						
Faulty Oil Pressure Regulator																			●												
Crankcase Low or Out of Oil																			●		●	●	●	●	●						
Wrong Grade Oil for Weather Conditions																●			●				●	●							
Oil Level Too High							●				●					●						●									
Cooling System																															
Insufficient Coolant/Worn Pump																			●	●	●										
Faulty Thermostats																	●		●	●	●										
Damaged Hose/Loose Belts																			●	●	●										
Radiator Shutters Stuck Open				●													●			●											
Internal Water Leaks																	●	●													
Clogged Oil Cooler or Water Passages																			●			●									
Exterior Leaks/Air in System																			●		●	●									
Low Coolant Capacity/Dirty Radiator																			●		●	●									
Coolant Temperature Low				●													●	●		●						●					
Operation and Maintenance Practices																															
Dirty Filters/Screens/Breather							●	●										●					●	●	●						
Long Idle Periods	●	●	●	●	●		●										●	●		●											
Engine Overloaded							●	●			●												●	●		●					
Oil Needs Changing																	●						●	●	●						
Engine Exterior Dirty																					●	●									
Mechanical Adjustments or Repair																															
Gasket Blow-By or Leakage	●	●	●		●	●	●	●		●	●	●	●	●	●	●		●	●												
Faulty Damper/Flywheel Balance																										●		●	●		
Valve Leakage/Adjustment Bad	●	●			●	●	●																		●				●		
Broken or Worn Piston Rings	●	●	●		●		●									●						●				●					●
Incorrect Bearing Clearances							●				●								●				●			●	●				
Excessive Crankshaft End Clearance																							●			●	●				
Broken Cam Lobes						●																									
Main Bearing Bore Out of Alignment																							●			●		●			
Engine Due for Overhaul	●		●		●		●				●					●			●			●	●	●		●	●	●			●
Damaged Main or Rod Bearings																			●				●			●					
Geartrain Backlash/Broken Tooth																										●	●		●		
Misalignment-Engine to Driven Unit											●												●				●	●			
Loose Mounting Bolts/Head Capscrew																										●		●			
Incorrect Valve and Injection Timing	●			●	●	●	●				●														●				●		
Worn or Scored Liners or Pistons			●			●	●									●						●				●			●		●
Injectors Need Adjustment		●	●	●	●	●	●	●	●	●	●														●						
Broken/Bent Push Rod or Cam Box						●																				●			●		
Mechanical Variable Timing System																															
Faulty Rail Pressure Switch (Open)			●	●		●																									
Faulty Rail Pressure Switch (Closed)							●																						●		
Faulty Solenoid			●	●		●																									
Damaged Piston and Rack Seals			●	●		●																									●
Insufficient Torque on Actuator Capscrew			●	●		●																									
Solenoid Orifice Plugged							●																								
System Stick in Retard			●	●		●																									
Broken or Disconnected MVT Wire				●																											
Loose Cam Follower Shaft Eccentric		●		●																											
System Stuck in Advance							●																			●			●		
Maintenance																															
Plugged Airline to MVT Activator			●	●		●																									
Plugged Exhaust From MVT Activator							●																								

Digitized by Google

Index

Digitized by Google

Index

Digitized by Google

Part 2
REPAIR

Digitized by Google

Foreword

This NH/NT/NTA-855 C.I.D. Engine Rebuild Manual is written and organized in a way which allows a user, no matter his familiarity with Cummins engines, to follow the procedures necessary to rebuild that engine. For this reason, we have attempted to use as few technical terms as possible and have divided procedures into the basic steps.

This NH/NT/NTA Manual contains these instructions and specifications:

- Disassembly of the engine
- Disassembly of some components and most assemblies
- Cleaning and inspection of the engine and parts
- Repair and/or replacement of parts
- Assembly of components and assemblies
- Assembly and testing of the engine
- Worn limits
- Torque values

Some information that is specific to particular engine models is included. You should determine what engine model an engine is before doing any work on that engine. The dataplate on the engine will identify the engine model. This model number provides information on the design, aspiration, cubic inch displacement, application (equipment for which the engine was designed) and maximum rated horsepower.

Example: NTA-855-C360

N = NH Engine Series
T = Turbocharged (if there is no "T", the engine is naturally aspirated)
A = Aftercooled
855 = Cubic Inch Displacement
C = Construction Application
360 = Maximum Rated Horsepower

Application Designations

C = Construction
G = Generator (GS = Standby, GC = Continuous Duty)
P = Power Unit
M = Marine
L = Locomotive
R = Railcar

How to use this Manual

The manual is divided into 22 groups. These groups are listed in the Table of Contents.

The disassembly of the engine is covered in Group 0. The disassembly, inspection and assembly of components are covered in the appropriate group. For example, Group 0 contains the instructions for removing the lubricating oil pump from the engine. Group 7, Lubricating System, contains the instructions for disassembly, inspection and assembly of the lubricating oil pump itself.

Note: Some components are not included in the engine manual. They are: (1) the fuel pump, (2) air compressor, (3) injectors and (4) turbochargers.

At the beginning of each group is an exploded view of the components covered in that group. These exploded views show the relationship between all parts in a component.

Also at the beginning of each group is a list of tools either required or recommended to do the procedures described in that group. Many of these tools were designed by Cummins Engine Company to perform a specific procedure and are available from your Cummins Distributor. Other tools are standard tools which are generally available.

At the end of each group is a table which includes the worn limits, and dimensions of the parts contained in that group. (Worn limits indicate that a part can be used if its dimensions are within the dimensions given and if it is not damaged.) Torque values are also included in this table.

Group 18 includes the specifications contained in all other groups and the following additional specifications:

1. Oil Recommendations
2. Fuel Recommendations
3. Coolant Recommendations

There is an alphabetical index at the end of the manual to allow you to find the page number for specific information without having to read through an entire group. This index is intended to match the headings used in the text. For example, if you are looking for disassembly of the lubricat-

Digitized by Google

ing oil pump, look up "Lubricating Oil Pump" in the index. The entry would appear as follows:

Note: The pages in this manual are numbered in sequence within the group. That is, the first page in Group 0 is 0-1; the first page in Group 1 is 1-1.

The last page in this manual is a list of other Cummins Engine service publications on related subjects.

The pages of the manual can be removed by bending the manual back at the beginning and end of each group. The pages can then be easily pulled out and put in a three-ring binder.

This manual includes Service/Parts Topic information concerning the NH/NT/NTA-855 from February, 1979 to September, 1981 and supersedes Bulletin Number 3379076-04. As it is the policy of Cummins Engine Company, Inc. to improve its products, design changes will occur after publication of this manual which can affect the procedures described in this manual. If you have any questions about your engine, check with your local Cummins Distributor or Dealer.

To make sure that this manual provides the information you need in a way that allows you to make the best use possible of that information, we need to hear from you about any problems you encounter. Please send your comments to:

NH Technical Writer — 80203
Service Operations
Cummins Engine Company, Inc.
Box 3005
Columbus, IN 47201

Digitized by Google

Table of Contents

The Contents of this manual are based on information in effect at time of printing and are subject to change without notice.

Digitized by Google

Digitized by Google

Digitized by Google

Group 0

During unit removal, time and labor will be saved if the steps outlined are followed. Precautions are included that may help prevent accidents and/or damage to the parts.

Engine Disassembly

Service Tool List

The following service tools or tools of equal quality are required to disassemble the 855 C.I.D. (Cubic Inch Displacement) Series Diesel Engines.

Service Tools (Or Equivalent) Required	
Service Tool Number	**Tool Name**
ST-125	Lifting Fixture
ST-548, 1317 or 3375193	Engine Rebuild Stand
ST-805 or 3375013	Engine Stand Adapter
3376028	MVT Fixture
3376029	Bracket and Studs
Desirable (Or Equivalent) Service Tools	
ST-163	Engine Support
ST-647	Puller (Pulley)
ST-845	Fan Hub Wrench
ST-887	Crankshaft Flange Puller
ST-893	Fan Hub Wrench
ST-1178	Main Bearing Cap Puller
ST-1201	Liner Puller Bridge
ST-1202	Liner Puller Assembly
ST-1259	Seal Mandrel
ST-1297	Injector Puller
3375049	Filter Wrench (Spin-On)
3375161	Top Stop Injector Puller
3375268	Camshaft Pilot
3375602	Nylon Guide Screws
3376015	Cylinder Liner Puller
Standard Tools — Obtain Locally	
	Hoist (Power or Chain)
	Steam Cleaner
	Cleaning Tank
	Rinsing Tank
	Impact Wrench
	Glass Bead Cleaner

General Information

Engine Dataplate

The engine dataplate is located on the mounting flange for the gearcase, Fig. 0-1.

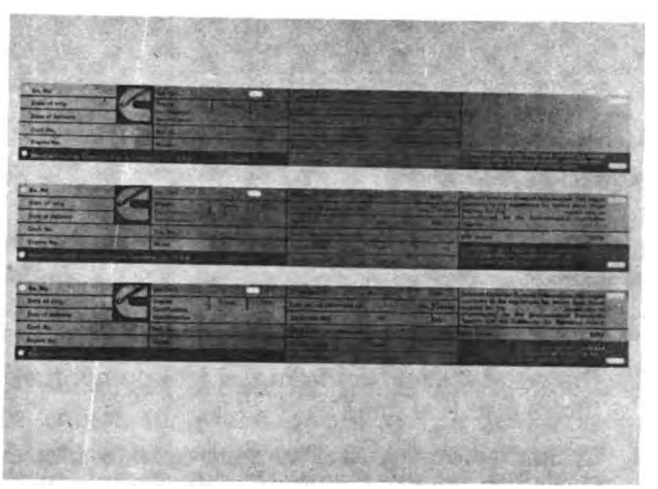

Fig. 0-1. Engine Dataplates

Always write the serial number of the engine, the CPL number and the engine Model number on all orders for parts. This information is important for fuel pump calibration and ordering parts.

Note: The Engine Dataplate must not be changed unless approved by Cummins Engine Co., Inc.

Inspect the engine before disassembly. Check the locations of the parts on the outside of the engine.

During disassembly, check the length of the capscrews when they are removed. Keep the

Digitized by Google

capscrews seperate according to their use on the engine. This will help you find the correct capscrews during assembly.

Discard the seals, gaskets, lockplates, O-rings and other sealing parts after they have been removed from the engine. Check the hoses and belts for damage.

To prepare the engine for disassembly, remove all fluids from the engine.

To Drain The Fluids

1. Drain the oil from all the components on the engine, Fig. 0-2.

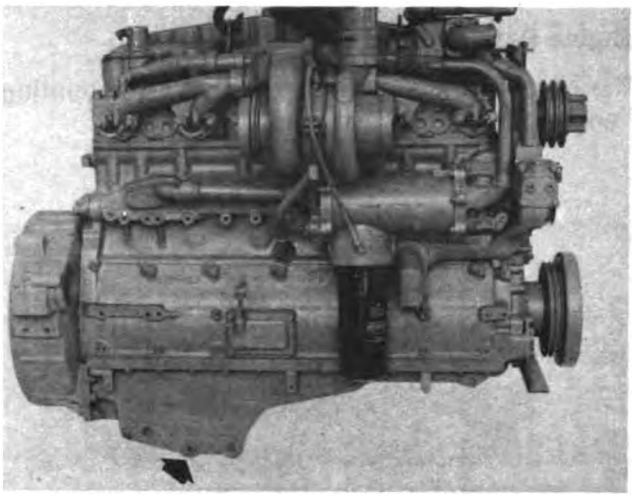

Fig. 0-2. Oil Drain Plug

2. Drain the diesel fuel from the fuel pump, fuel filters and fuel lines.
3. Drain the cooling fluid from the cylinder block (Fig. 0-3) and all the components on the engine.
4. If the engine has a compressed air system, vent the compressed air.

Cleaning

To Clean The Engine

Before you clean the engine, remove the electrical equipment (Fig. 0-4 and Fig. 0-5) and controls. Put a label on the wiring as it is removed. Put a cover or tape on the openings of the engine to prevent moisture from entering the engine. Clean the engine with any standard steam cleaner or with hot water under high pressure.

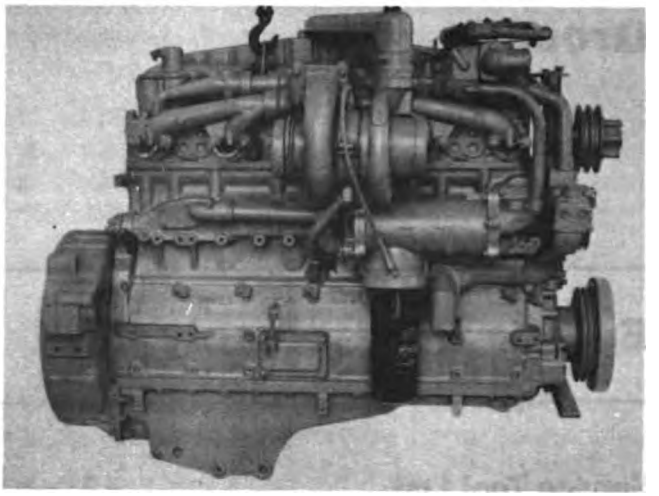

Fig. 0-3. Drain The Coolant From The Engine.

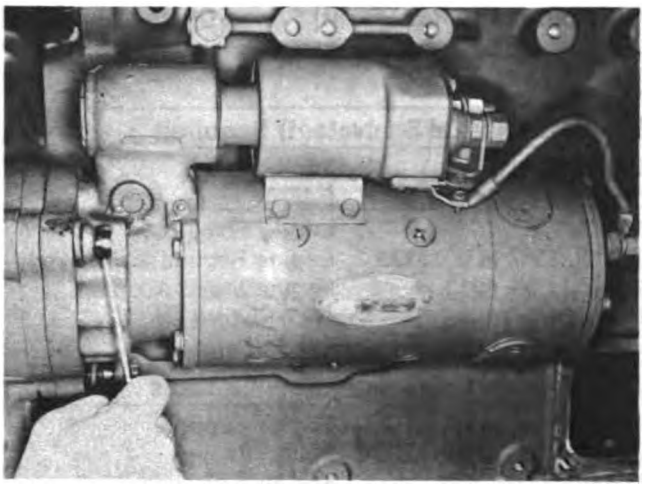

Fig. 0-4 (N10074). Remove The Starting Motor.

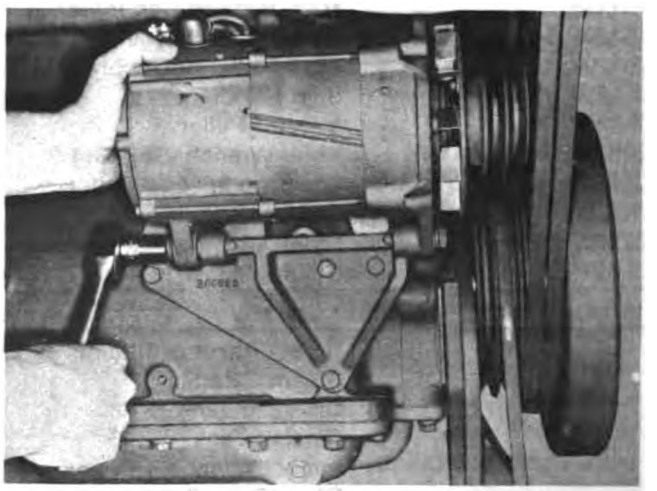

Fig. 0-5 (N10075). Remove The Alternator.

Digitized by Google

To Clean Parts And Assemblies

Most of the parts can be cleaned with steam or hot water. Use steam to clean the pistons. Then use a solvent so that all of the carbon is removed from the ring grooves of the piston. If the part will be damaged by moisture or does not come clean, use another method. If a part is to be put in storage, dry it with compressed air and coat it with a rust inhibitor. The parts must be cleaned as soon as possible after disassembly.

To Clean Parts With Glass Beads

Use glass beads to clean valves and cylinder heads.

Follow These Recommendations:

1. Size of the glass beads: Use U.S. sieve size Number 60.
2. Pressure: Use 80 psi [551 kPa] pressure. Or follow the Manufacturers instructions.
3. Do not let the glass beads hit the part for more time than is necessary. Be careful when you clean parts made of aluminum.
4. After using the glass beads, use steam and compressed air to remove the glass beads from the parts. Then, wash the parts in solvent and dry with compressed air. Make sure all the parts are clean and all glass beads are removed before the parts are assembled.

Note: Use a different container of solvent to wash parts that have been cleaned with glass beads.

To Clean Parts With Solvent Or Acid

Warning: The use of acid is dangerous to both a person and a machine. Always have a tank of strong soda water to control the acid. Wear safety glasses and gloves.

Always read the instructions given on the containers of cleaning solvents and acids. Follow these instructions.

Caution: Cleaning solvents can damage the bearing shells and aluminum parts. Always read the instructions for cleaning these parts before you clean them.

Caution: Do not damage the surface of the parts.

Before you put the parts into a container of solvent solution, make sure you remove all gaskets and deposits.

Caution: Do not damage the gasket surfaces of the parts.

1. Heat the solution of solvent or acid to approximately 180° to 200°F [82° to 93°C]. Mix the solution continuously.
2. After disassembly, put the small parts in a wire container and clean them with steam. After steam cleaning, put the parts in the heated solution. Use a hoist to lower the large parts into the cleaning solution.
3. Make sure all the pipe plugs are removed from the oil passage in the cylinder block. To clean the passage, push a rod with a brush attached to one end through all the passages in the cylinder block. Remove all the deposits from the bore for the cylinder liner. Use a wire brush installed in an air drill to clean the counterbore for the cylinder liner. Remove any scratches or damage.

Note: If the engine has piston cooling, make sure the spring and plug under the pipe plug for the piston cooling oil passage is removed before cleaning the cylinder block.

4. To remove thick mineral deposits other than dirt, use a solution of acid.

Warning: Acid can cause an injury to you or damage machinery. Always have a tank of strong soda water ready for use.

5. Wash all the parts in hot water and dry with compressed air. Use the compressed air to remove the cleaning fluid or water from the holes for the capscrews. This will prevent damage when the capscrews are installed.
6. Install the spring and plug for the oil passage. Install the pipe plugs in the oil passages and tighten them to the correct torque.

Note: If a part requires repair with a machine tool, do not install the pipe plugs in the part until the repairs are completed. Clean all metal particles from the part. Then install the pipe plugs.

7. If the parts are not used immediately after cleaning, apply a coating of rust protection compound to protect the parts from rust.

Note: You must remove the rust protection compound from the parts before you assemble them in the engine.

Digitized by Google

Disassembly of the Engine

Before you install the engine on the engine stand, remove the following items:

The Oil Gauge and Bracket

1. Remove the capscrews and lockwashers that hold the bracket to the cylinder block, Fig. 0-6.
2. Remove the bracket for the oil gauge from the cylinder block.

Fig. 0-6. Remove The Oil Gauge Bracket.

The Water Filter

1. Close the shutoff valves for the inlet line and the outlet line.
2. Remove the element from the water filter and discard, Fig. 0-7.
3. Disconnect the inlet line and the outlet line from the head of the water filter.
4. Remove the capscrews, lockwashers and flatwashers that hold the bracket and head of the filter to the cylinder block.

The Mechanical Controls and Supply Lines for Fuel, Air and Water

1. Remove the linkages that control the throttle and clutch. Remove any other controls that are mounted to the engine.
2. Remove all water connections and hoses.
3. Remove the fuel lines from the drain for the fuel injectors and the inlet. If the engine has one, remove the fuel filter. Remove the line that returns the fuel from the fuel pump to the fuel tank.

Note: When an engine is a dual diesel, there are two sets of fuel lines and additional valves to control the fuel.

4. Remove the air lines from the air compressor.
5. Remove the hoses and tubes that connect the air cleaner and the turbocharger.

Caution: During disassembly of the engine, put a cover tape over the inlet and outlet to the turbocharger.

The Turbocharger

1. Remove the air crossover from the turbocharger and aftercooler or intake manifold, Fig. 0-8.

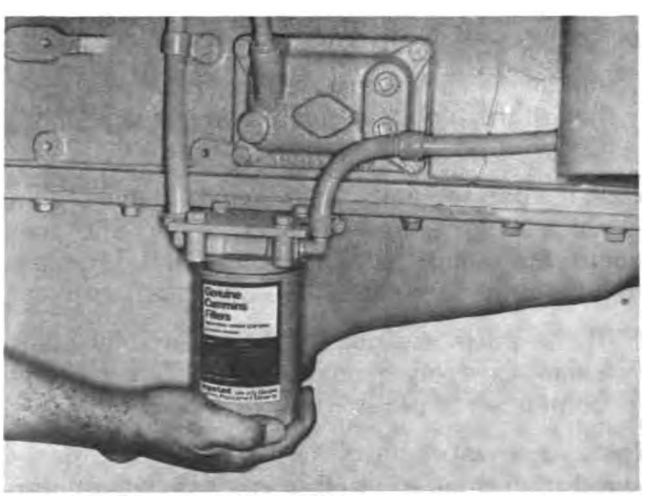

Fig. 0-7 (N11976). Remove The Water Filter.

Fig. 0-8. Remove The Air Crossover.

Digitized by Google

2. Remove the oil drain line from the turbocharger and cylinder block. Remove the oil supply line from the turbocharger and the oil cooler, Fig. 0-9.

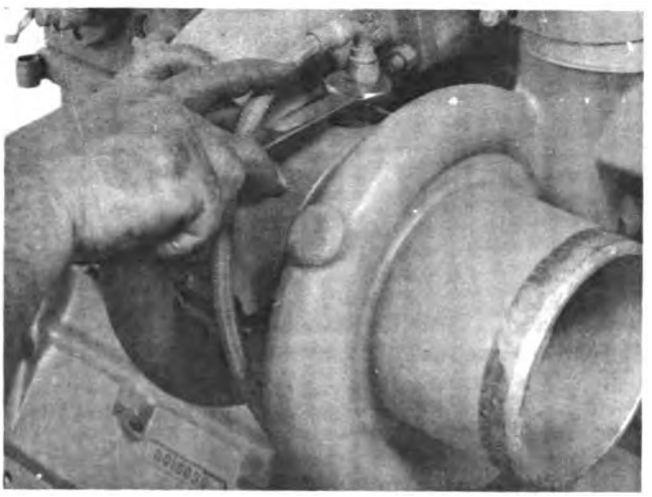

Fig. 0-9. Remove The Turbocharger Oil Supply Line.

3. Before you remove the turbocharger, remove all heat shields for the turbocharger. Remove the locknuts that hold the turbocharger to the exhaust manifold. Lift the turbocharger from the flange on the exhaust manifold, Fig. 0-10.

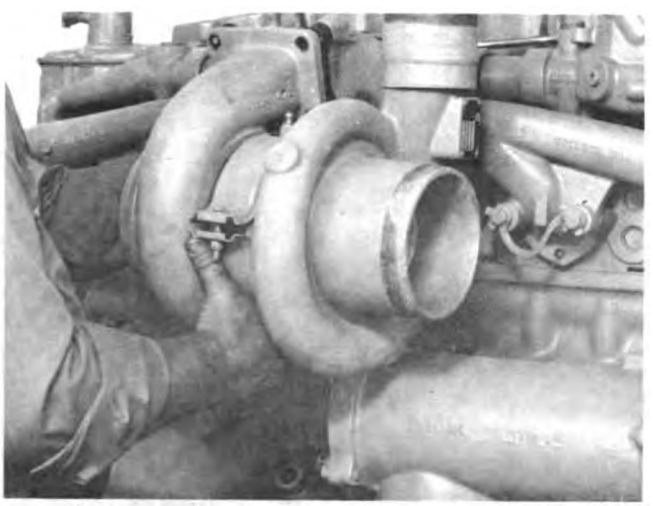

Fig. 0-10. Remove The Turbocharger.

The Crankcase Vent

1. Loosen the clamps and remove the hose for the vent tube from the breather.
2. Remove the capscrews and lockwashers that hold the clip for the vent tube to the cylinder block.
3. Remove the vent tube and clip from the engine.

The Oil Cooler and Filter

1. Remove the capscrews holding the water connection to the cylinder block, Fig. 0-11.

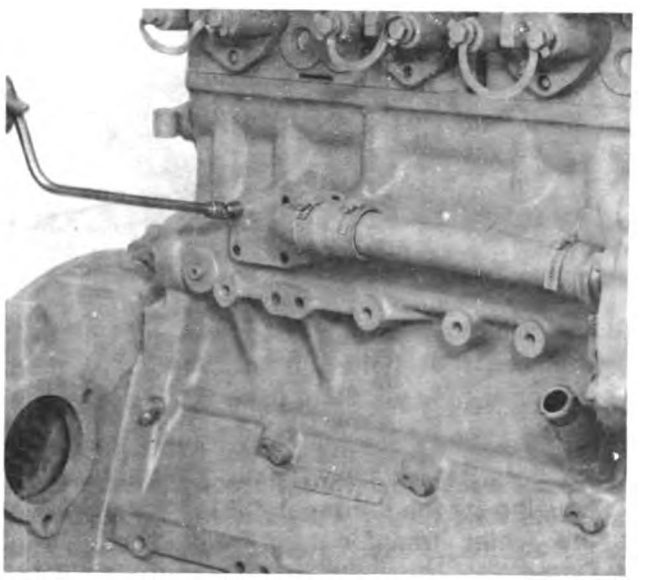

Fig. 0-11. Remove The Capscrews Holding The Water Connection.

2. Loosen the clamp that holds the transfer tube to the oil cooler. Remove the transfer tube and water connection, Fig. 0-12.

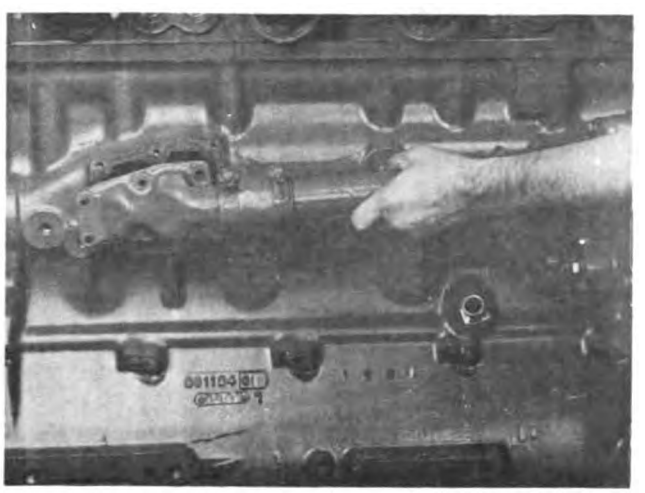

Fig. 0-12 (N100141) Remove The Water Connection And Transfer Tube.

3. Remove the oil filter and discard it, Fig. 0-13.

Digitized by Google

Fig. 0-13. Remove The Oil Filter.

4. Remove the capscrews, lockwashers and flatwashers that hold the bracket for the oil cooler to the cylinder block.
5. Remove the capscrew, lockwasher and flatwasher that hold the water transfer tube to the housing for the thermostat, Fig. 0-14. Remove the water transfer tube and discard the O-rings.

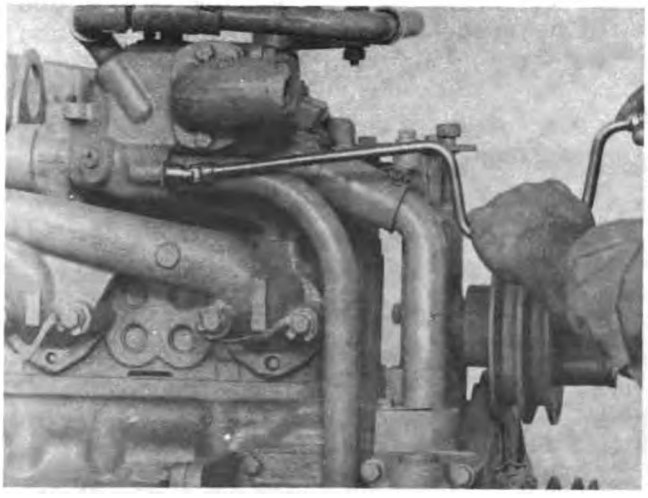

Fig. 0-14. Remove The Capscrew That Holds The Transfer Tube.

6. Remove the capscrews, lockwashers and flatwashers that hold the support for the oil cooler to the cylinder block. Install a dowel into one of the capscrew holes to hold the support until all the capscrews are removed. Remove the oil cooler, Fig. 0-15. Remove the dowel.

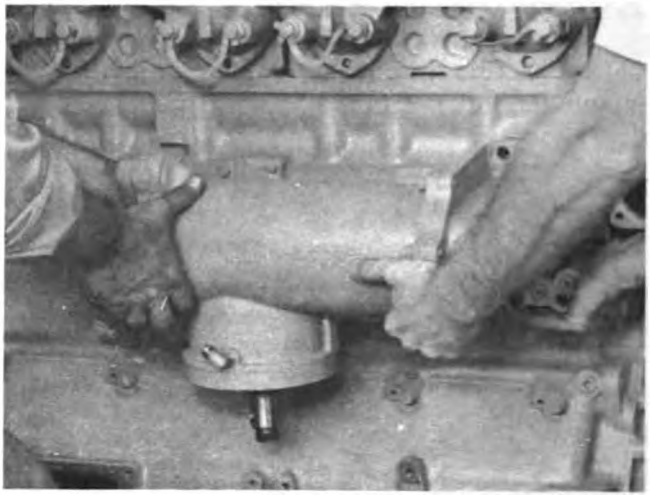

Fig. 0-15. Remove The Oil Cooler Housing.

The Water Pump Inlet

1. Remove the capscrew, lockwashers and flatwashers that hold the bracket for the water inlet connection to the cylinder block.
2. Remove the capscrews, lockwashers and flatwashers that hold the inlet for the water to the water pump. Remove the inlet and discard the gasket, Fig. 0-16.

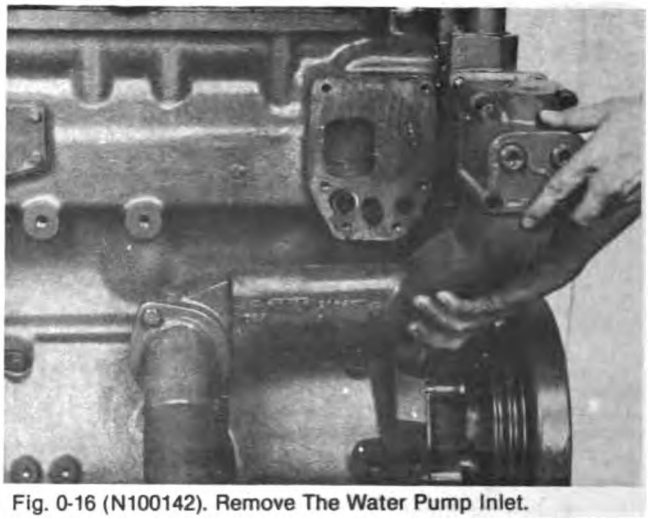

Fig. 0-16 (N100142). Remove The Water Pump Inlet.

The Piston Cooling Nozzles

Remove the capscrews and lockwashers that hold the nozzles in the cylinder block. Remove the nozzles, Fig. 0-17.

Digitized by Google

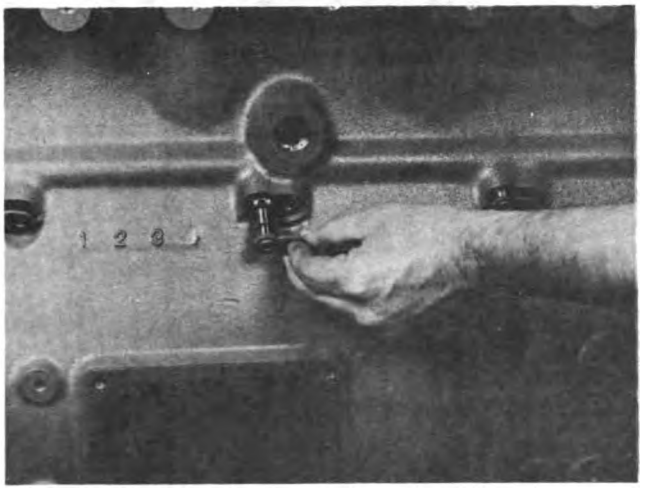

Fig. 0-17 (N100140). Remove The Piston Cooling Nozzle.

The Exhaust Manifold

1. Bend the tabs on the lockplate away from the capscrews for the exhaust manifold.
2. Remove the capscrews, lockwashers and lockplates that hold the exhaust manifold to the cylinder block, Fig. 0-18.

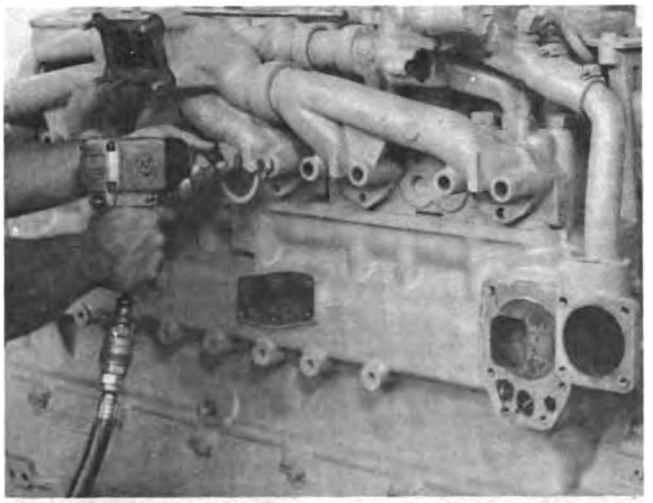

Fig. 0-18. Remove The Capscrews From The Exhaust Manifold.

3. Remove the exhaust manifold.

To Install the Engine on the Engine Stand

1. Replace the rear water header cover with the adapter plate for the engine stand.
2. Install the adapter plate for the engine stand to the engine stand.
3. Put the engine in the correct position on the engine stand. Install the lockwashers and capscrews to hold the engine to the stand.
4. After the engine is tightly installed to the engine stand, Fig. 0-19, remove the following items.

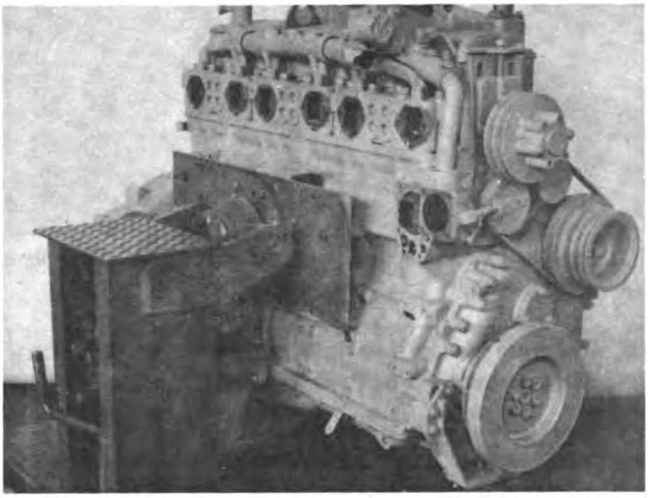

Fig. 0-19. The Engine Installed To The Engine Stand.

The Aftercooler

1. Loosen the clamps and remove the water crossover tube from the front of the aftercooler, Fig. 0-20.

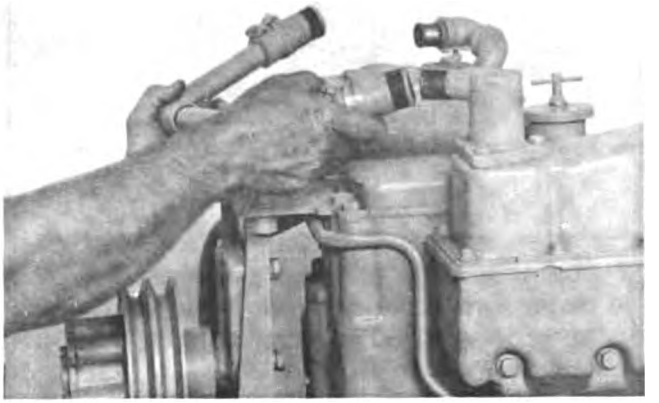

Fig. 0-20. Remove The Water Crossover Tube.

2. Loosen the clamps and remove the water crossover tube from the rear of the aftercooler, Fig. 0-21.

Digitized by Google

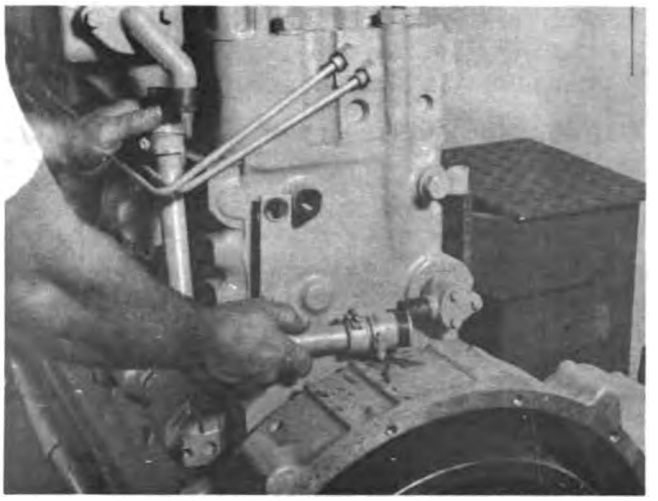

Fig. 0-21. Remove The Tube From The Rear Of The Aftercooler.

3. Remove the air supply tube for the air compressor from the aftercooler, Fig. 0-22.

Fig. 0-22. Remove The Air Supply Tube From The Air Compressor.

4. Remove the capscrews and lockwashers that hold the aftercooler to the engine, Fig. 0-23. Install two dowels, one at each end of the aftercooler, into capscrew holes to hold the aftercooler.

5. Remove the aftercooler. The aftercooler is heavy. Use a hoist or another person to help you to remove the aftercooler. Remove the dowels.

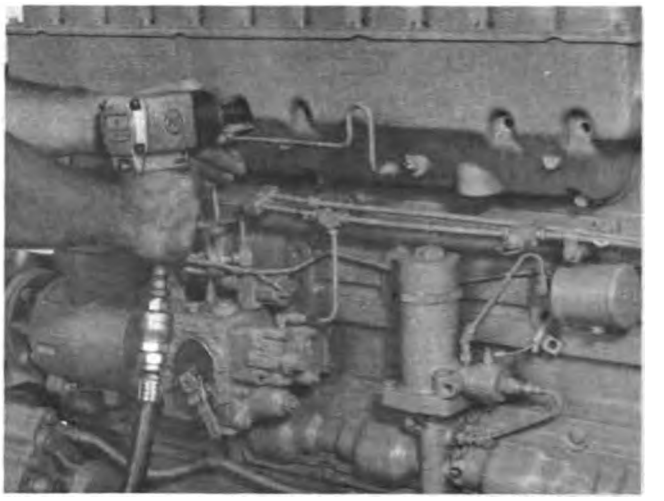

Fig. 0-23. Remove The Capscrews From The Aftercooler.

The Fuel Pump

1. Remove the capscrews that hold the fuel pump the the air compressor, Fig. 0-24. Remove the support brackets.

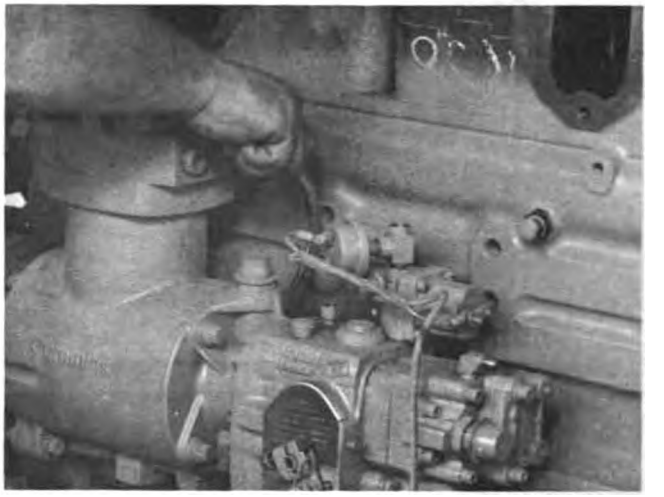

Fig. 0-24. Remove The Capscrews That Hold The Fuel Pump.

2. Remove the fuel pump from the air compressor, Fig. 0-25. Remove the fuel pump drive spider coupling.

3. Put a cover over the connections on the fuel pump so dirt will not enter the fuel pump.

Digitized by Google

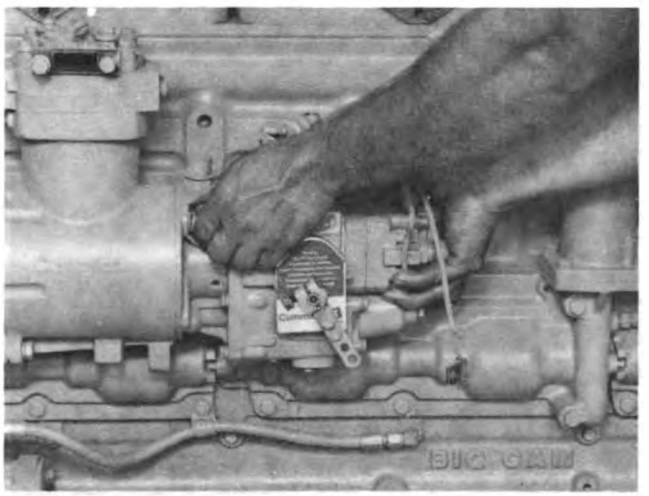

Fig. 0-25. Remove The Fuel Pump.

The Air Compressor

1. Remove the capscrews and lockwashers that hold the air compressor to the accessory drive.
2. Remove the air compressor from the accessory drive, Fig. 0-26.

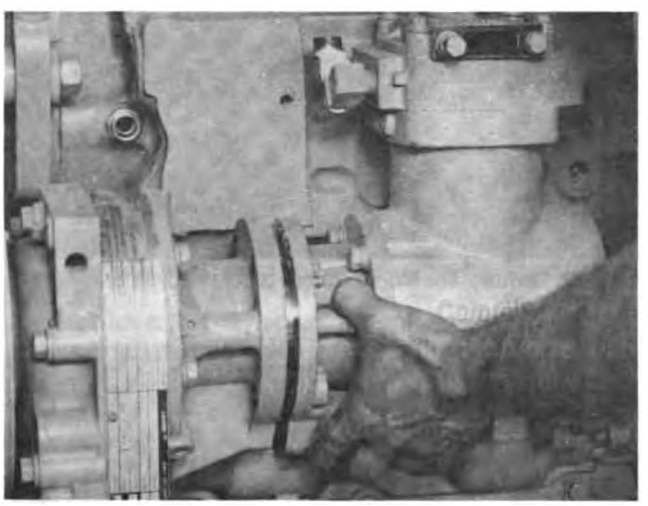

Fig. 0-26. Remove The Air Compressor.

3. Remove the spline coupling from the accessory drive, Fig. 0-27.

The Fan Hub Water Pump

1. Loosen the nut on the end of the idler shaft. Loosen the adjusting screw for the idler pulley. This releases the tension on the belt for the water pump, Fig. 0-28.

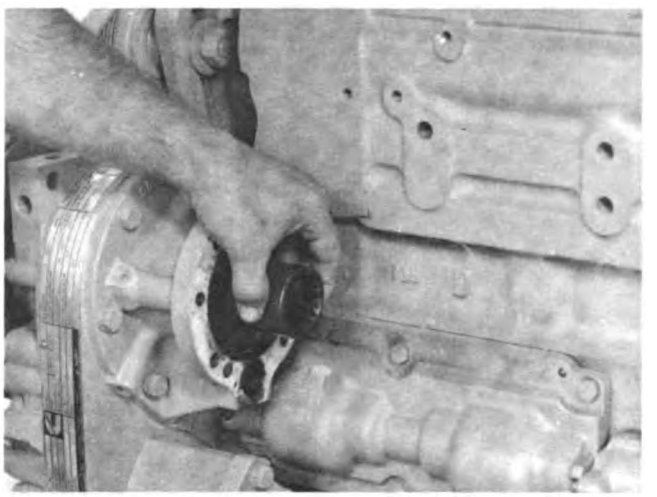

Fig. 0-27. Remove The Spline Coupling.

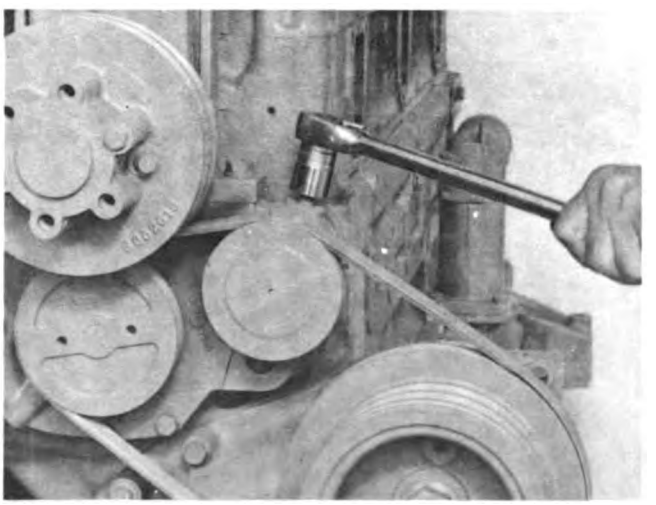

Fig. 0-28. Loosen The Water Pump Belt.

2. Loosen the adjusting screw for the fan hub to release tension on the belt for the fan hub.
3. Remove the belts for the fan hub and water pump.
4. Remove the capscrews and lockwashers that hold the adjusting bracket for the fan hub to the water pump body and the rocker lever housing, Fig. 0-29.
5. Remove the fan hub and adjusting bracket.
6. Loosen the clamps that hold the water bypass tube to the thermostat housing.
7. Remove the water bypass tube from the thermostat housing and the water pump body, Fig. 0-30. Discard the O-rings.

Digitized by Google

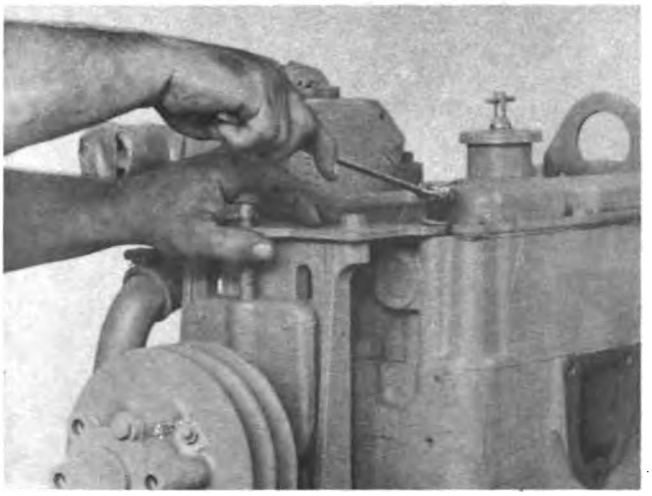

Fig. 0-29. Remove The Capscrews That Hold The Bracket.

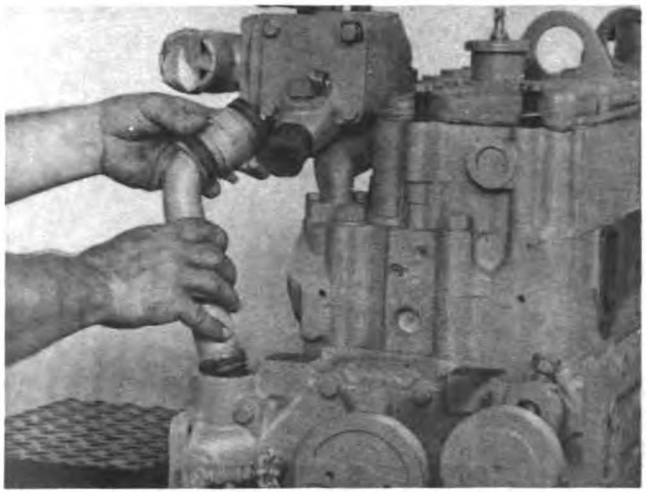

Fig. 0-30. Remove The Water Bypass Tube.

8. Remove the capscrews and lockwashers that hold the water pump body to the cylinder block, Fig. 0-31.
9. Remove the water pump and discard the gasket, Fig. 0-32.

The Accessory Drive Pulley

1. Remove the locknut and washer.

Note: When a flanged locknut is used to hold the pulley on the shaft, you must not let the accessory driveshaft turn when the locknut is removed. When the flanged locknut is installed, it is tightened to 270 to 340 ft.-lbs. [366 to 461 N•m] torque.

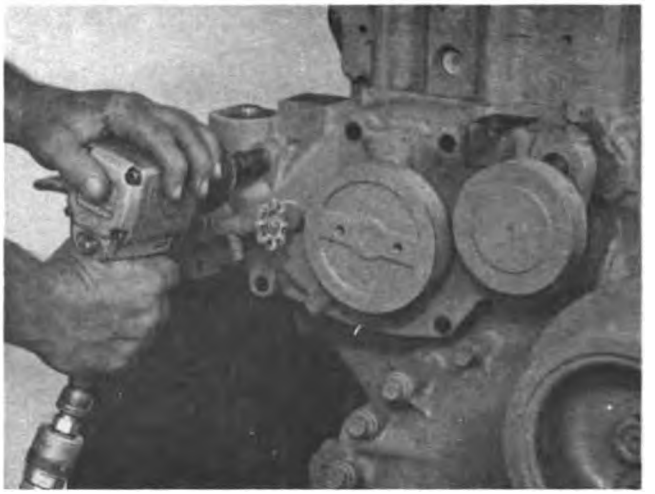

Fig. 0-31. Remove The Capscrews From the Water Pump.

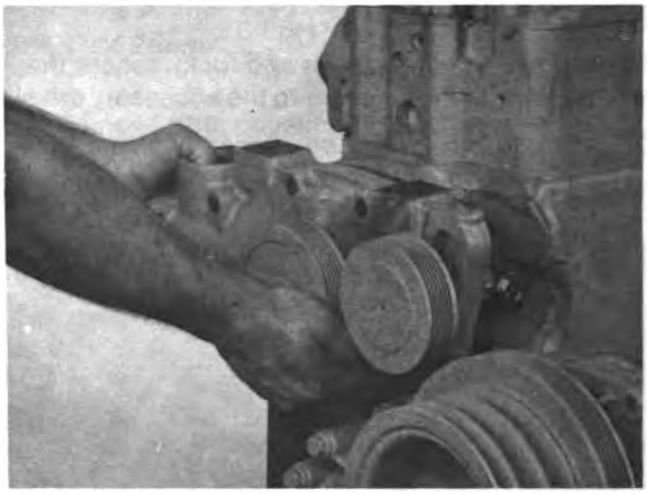

Fig. 0-32. Remove The Water Pump.

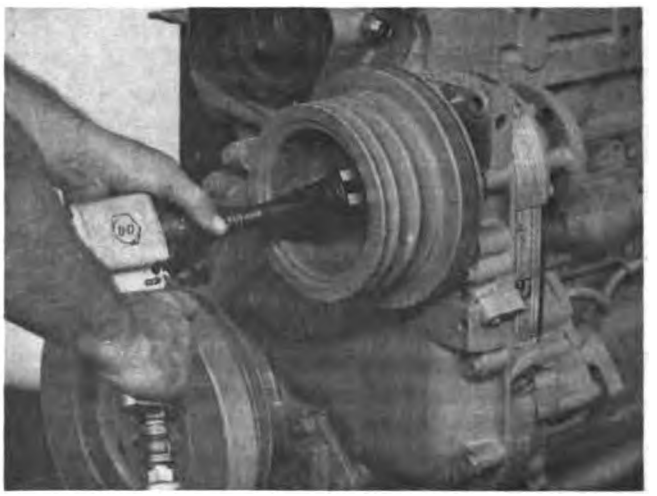

Fig. 0-33. Remove The Accessory Drive Pulley.

Digitized by Google

2. Use the ST-647 Puller to remove the pulley, Fig. 0-33. If the threads in the capscrew holes are distorted, install a tap with the same thread size into the holes. Remove the tap. Install the ST-647. Be careful and do not let the capscrews damage the gear cover.
3. Remove the pin and oil seal from the shaft.

The Accessory Drive

1. Remove the capscrews and lockwashers that hold the accessory drive to the cylinder block.
2. Use a rubber hammer to loosen the drive.
3. Remove the drive and discard the gasket, Fig. 0-34.

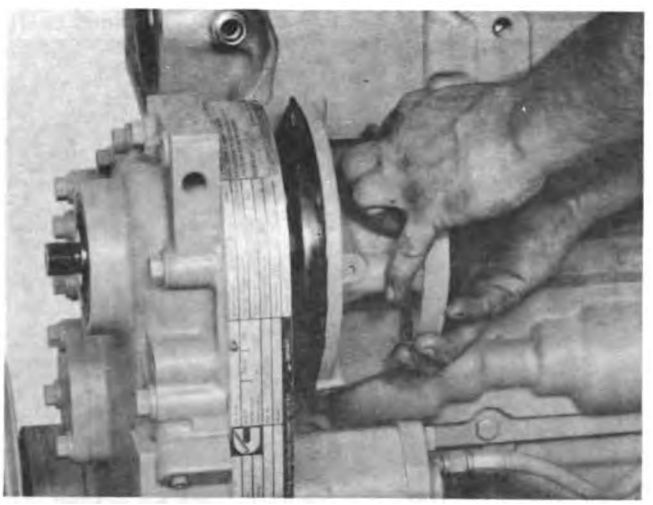

Fig. 0-34. Remove The Accessory Drive.

The Rocker Lever Cover

1. Remove the capscrews, lockwashers and flatwashers that hold the rocker lever cover to the rocker lever housing.
2. Remove the covers and discard the gaskets, Fig. 0-35.

The Rocker Housing

1. Loosen the locknut and adjusting screw for the rocker levers. Turn the adjusting screws counterclockwise two times.
2. Remove the capscrews and washers that hold the rocker housings to the cylinder heads.
3. Remove the rocker lever housing and discard the gaskets, Fig. 0-36. Put a mark on each housing as it is removed to identify its location on the engine.

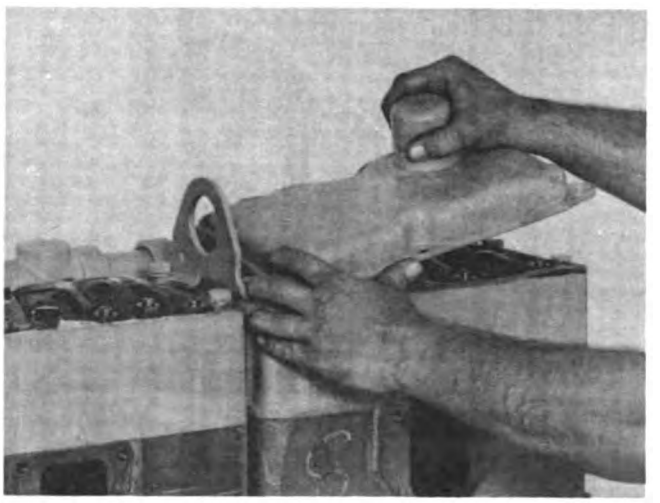

Fig. 0-35. Remove The Rocker Lever Covers.

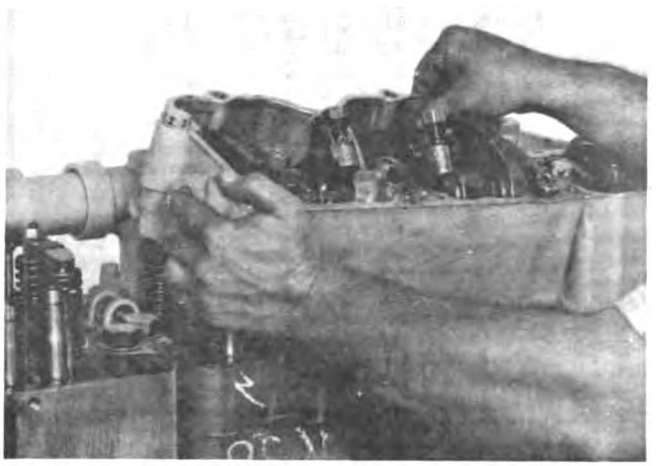

Fig. 0-36. Remove The Rocker Lever Housings.

The Push Rods

Lift all the push rods from their sockets. Put a mark on each push rod as it is removed to identify its location in the engine.

The Valve Crossheads

1. Loosen the crosshead adjusting nuts.
2. Remove all of the crossheads for the valves, Fig. 0-37.

The Water Manifold and Thermostat Housing

1. Remove the capscrews and lockwashers that hold the water manifold to the cylinder head.
2. Remove the water manifold and thermostat housing, Fig. 0-38. Discard the O-rings.

Digitized by Google

Fig. 0-37. Remove The Crossheads

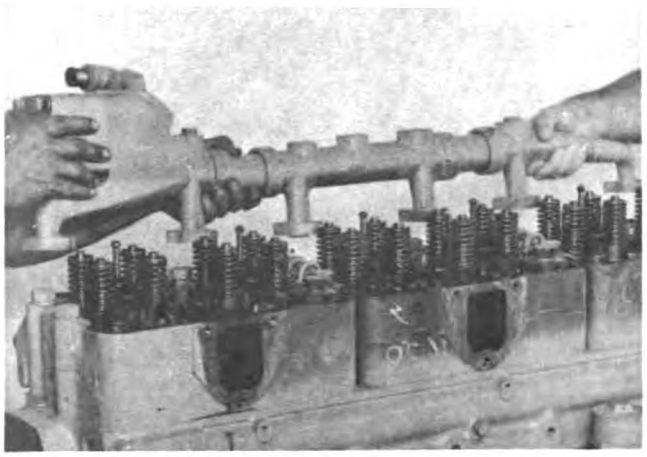

Fig. 0-38. Remove The Water Manifold.

The Injectors

1. Remove the capscrews that hold the injector clamps. Remove the clamps. Remove the injector links.
2. Use the Part No. 3375161 injector Puller to remove the top stop injectors from the cylinder head. Use the ST-1297 injector puller to remove the "PTD" injectors from the cylinder head.
3. Remove the injectors, Fig. 0-39. Put the injectors in a rack that will protect them from damage and dirt.

The Fuel Crossover

1. Remove the screws that hold the fuel crossover connectors to the cylinder head.
2. Lift the fuel crossover from the cylinder head and discard the O-rings, Fig. 0-40.

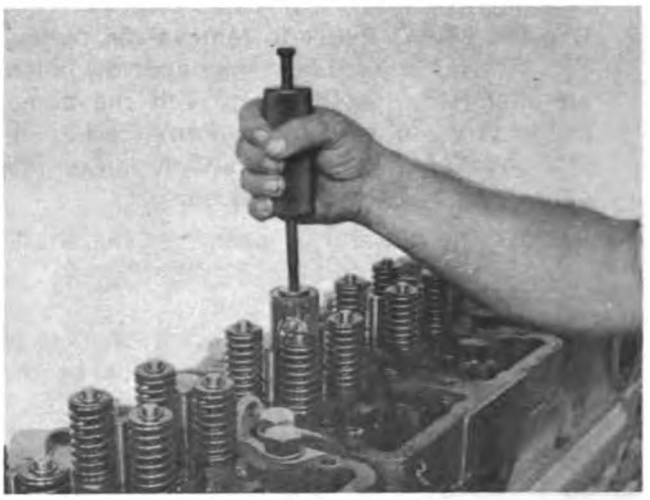

Fig. 0-39. Remove The Injectors.

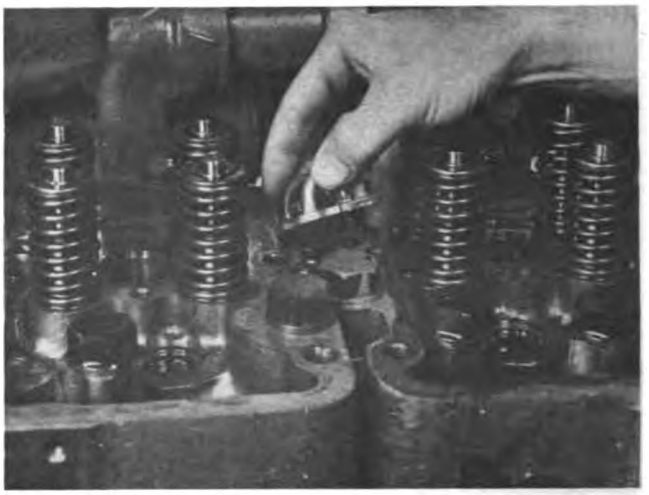

Fig. 0-40 (N100149). Remove The Fuel Crossover.

The Cylinder Head

1. Remove the capscrews and washers that hold the cylinder head to the cylinder block. Be careful and do not damage the capscrews.

Note: Remove the capscrews in the opposite sequence as that used for installing the cylinder heads, Fig. 0-41.

2. Lift each cylinder head from the cylinder block, Fig. 0-42. Put a mark on each cylinder head as it is removed to identify its location on the engine.
3. Remove and discard the gaskets.

The Lubricating Oil Pump

1. Disconnect the oil lines to the inlet and outlet of the oil pump.

Digitized by Google

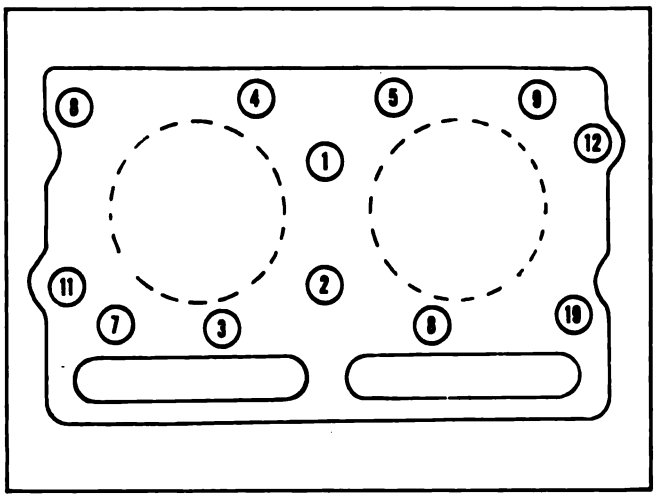

Fig. 0-41 (N11427). Tightening Sequence For The Cylinder Head Capscrews.

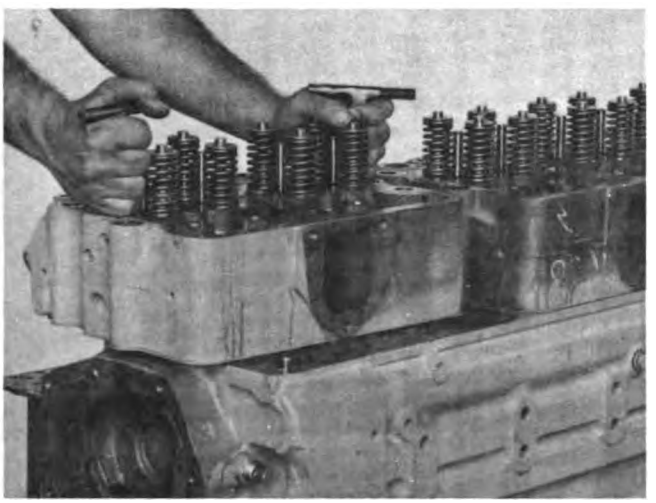

Fig. 0-42. Remove The Cylinder Heads.

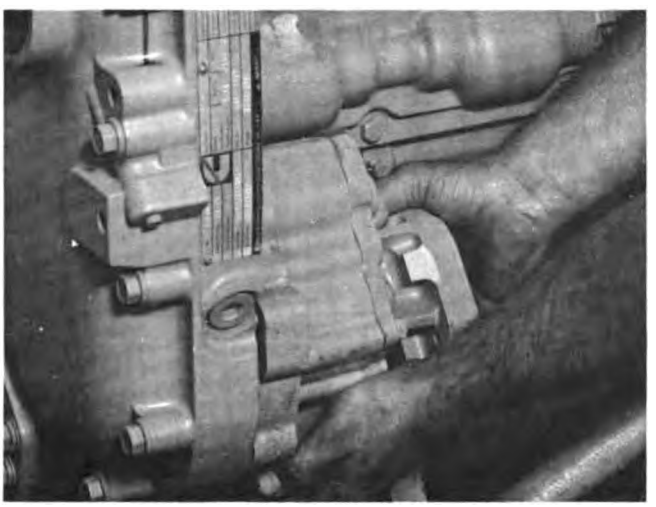

Fig. 0-43. Remove The Oil Pump.

2. Remove the capscrews and lockwashers that hold the oil pump to the cylinder block.
3. Remove the oil pump from the gear case, Fig. 0-43. Discard the gasket.

The Cam Follower Housings

1. Remove the capscrews and lockwashers that hold the cam follower housings to the cylinder block.
2. Lift and remove the housings from the cylinder block.

Note: Do not discard the metal spacer that is used on some engines. Measure and make a record of the total thickness of the gaskets. The thickness of the gaskets between the cam follower housing and the cylinder block controls the injection timing.

The MVT Cam Follower Housing

The cam follower housings with mechanical variable timing (MVT) are installed on the engine as an assembly and must be removed as an assembly. Follow these instructions.

1. Remove two capscrews and lockwashers as shown in Fig. 0-44, from the first and third housing of the assembly.
2. Install the Part No. 3376028 MVT Fixture to the housings.

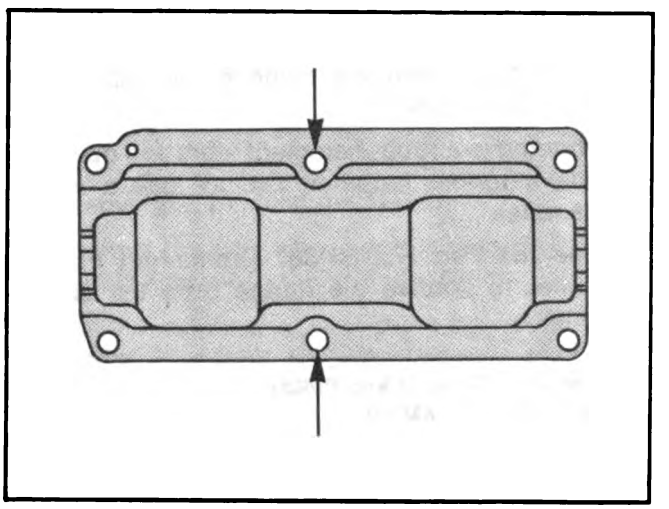

Fig. 0-44. Remove These Capscrews From The First And Third Housing.

Digitized by Google

3. Remove the remaining capscrews and lockwashers that hold the housings to the cylinder block. Then, install the 3376029 bracket to the 3376028 fixture.
4. Remove the cam follower housing assembly, Fig. 0-45.

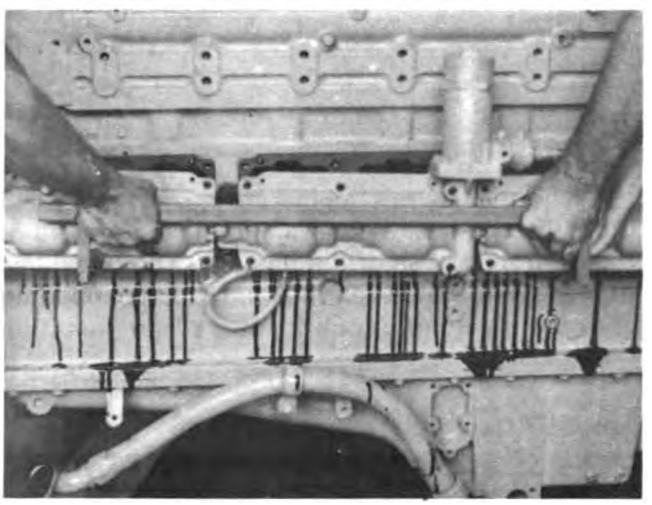

Fig. 0-45. Remove The Cam Follower Assembly.

5. Remove and discard the gasket.

Note: The cam follower assembly with mechanical variable timing requires only one gasket.

The Vibration Damper

The Vibration Damper and Flange (Tapered End Crankshaft)

1. Remove the capscrews that hold the vibration damper to the flange. Do not let the crankshaft turn when you remove the capscrews from the flange.
2. To remove a rubber element vibration damper, use a rubber hammer. Do not use a metal hammer.
3. Use the Part No. ST-887 Crankshaft Flange Puller to remove the flange from the crankshaft.

The Vibration Damper and Pulley (Straight End Crankshaft)

1. Remove the capscrews that hold the vibration damper and pulley to the crankshaft adapter. Do not let the crankshaft turn when you remove the capscrews.
2. Remove the vibration damper and pulley, Fig. 0-46.

Caution: Do not use a hammer or screwdriver to remove a viscous damper. These tools can damage the viscous damper.

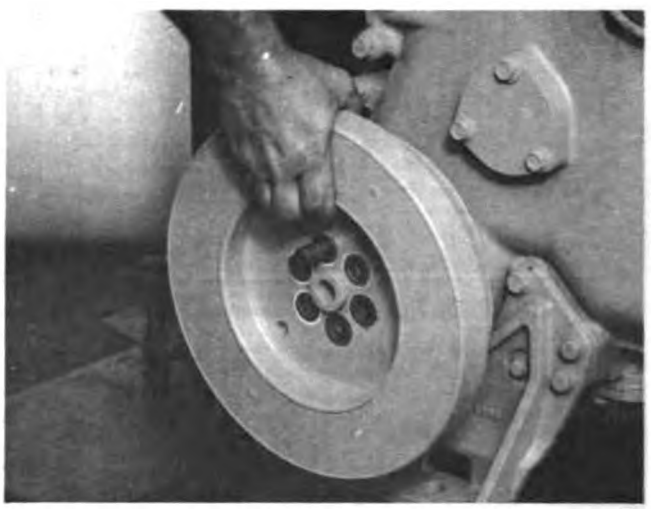

Fig. 0-46. Remove The Vibration Damper and Pulley.

The Front Engine Support

1. Remove the capscrews and lockwashers that hold the support to the engine.
2. Remove the front engine support, Fig. 0-47.

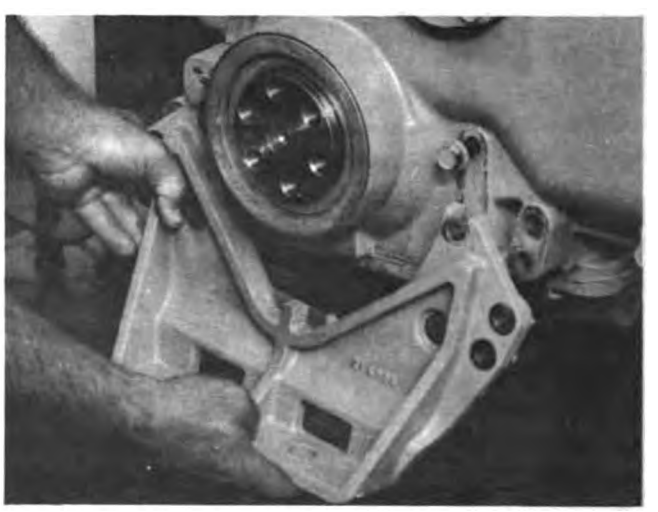

Fig. 0-47. Remove The Front Engine Support.

The Flywheel

1. Cut and remove the lockwires for the capscrews. Remove the capscrews, washers and lockwashers that hold the flywheel to the crankshaft.

Digitized by Google

2. Install two studs with 5/8"-18 threads and 6 inches [152 mm] long in the crankshaft to support the flywheel during removal.
3. Install two capscrews into the flywheel puller holes. The capscrews must have a 1/2"-13 thread for their complete length. Turn the capscrews slowly to push the flywheel from the crankshaft, Fig. 0-48.
4. Lift the flywheel from the crankshaft, Fig. 0-49.

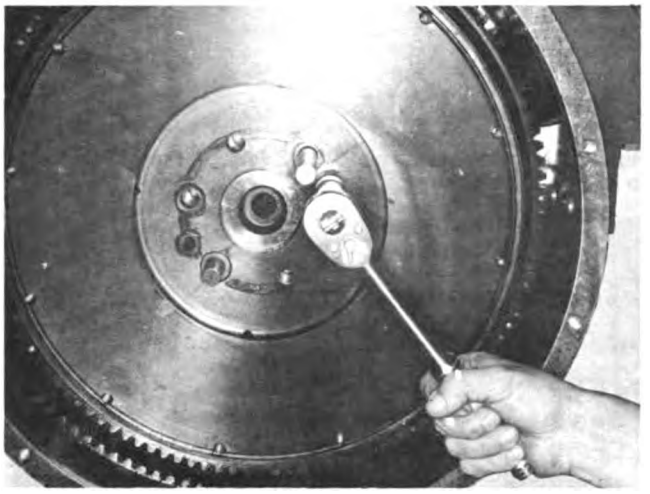

Fig. 0-48 (N100113). Push The Flywheel From The Crankshaft.

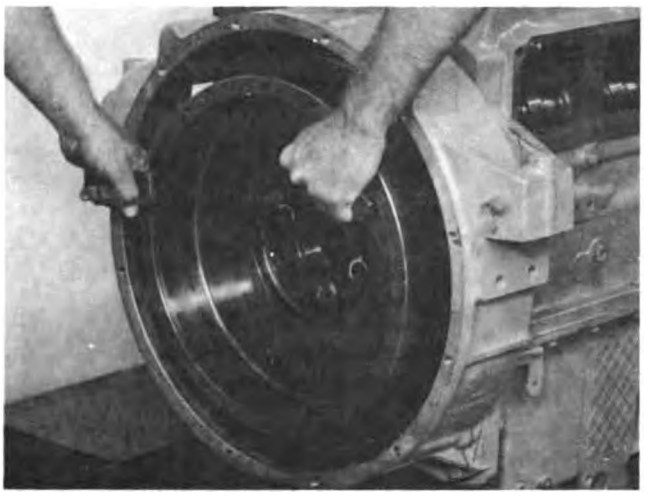

Fig. 0-49. Remove The Flywheel.

The Flywheel Housing

1. Remove the capscrews, lockwashers and flatwashers that hold the oil pan to the flywheel housing.
2. Remove the capscrews, lockwashers and flatwashers that hold the flywheel housing to the cylinder block, Fig. 0-50. Install two dowel bolts to hold the housing.

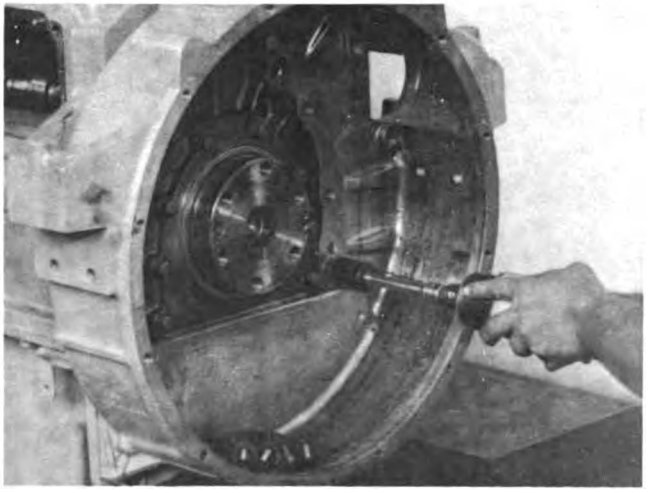

Fig. 0-50. Remove The Capscrews That Hold The Flywheel Housing.

3. Hit the housing with a rubber hammer to push the housing from the dowels in the cylinder block. Remove the dowel bolts.

The Oil Pan

1. Remove the bolts, capscrews, lockwashers and flatwashers that hold the oil pan to the cylinder block and gear cover.
2. Remove the capscrews that hold the oil pan to the rear cover.
3. Remove the oil pan and discard the gasket, Fig. 0-51.

The Rear Cover and Oil Seal

1. When a wet type flywheel housing is used, remove and discard the O-ring.
2. Remove the capscrews and lockwashers that hold the cover to the cylinder block.
3. Lift the cover and seal from the crankshaft flange, Fig. 0-52. Remove the seal from the housing.

The Gear Case Cover

1. Remove the camshaft support bearings. Do not discard the shims. Remove the capscrews

Digitized by Google

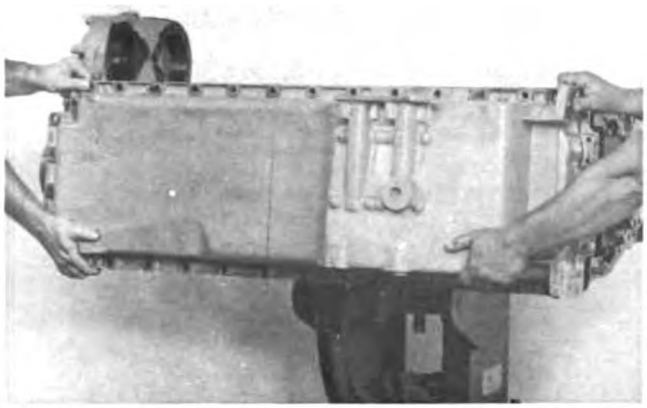

Fig. 0-51. Remove The Oil Pan.

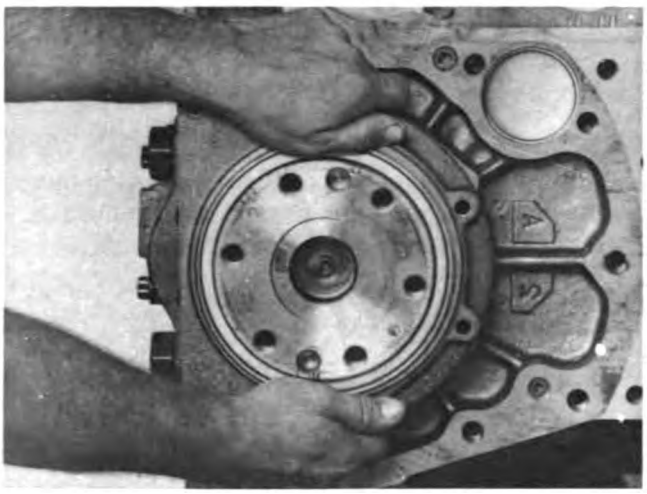

Fig. 0-52. Remove The Rear Cover And Seal.

and lockwashers that hold the cover to the cylinder block.

2. Install two 4 inch [101.6 mm] studs. Put one on each side of the cover for support during removal.
3. Remove the cover and discard the gasket.

The Camshaft

Before you remove a 2-1/2 inch camshaft, install the Part No. 3375268 Camshaft Pilot, Fig. 0-53. This will prevent damage to the camshaft journals and bearings.

1. Turn the camshaft gear slowly while you pull the camshaft from the engine. Do not remove the gear from the camshaft.

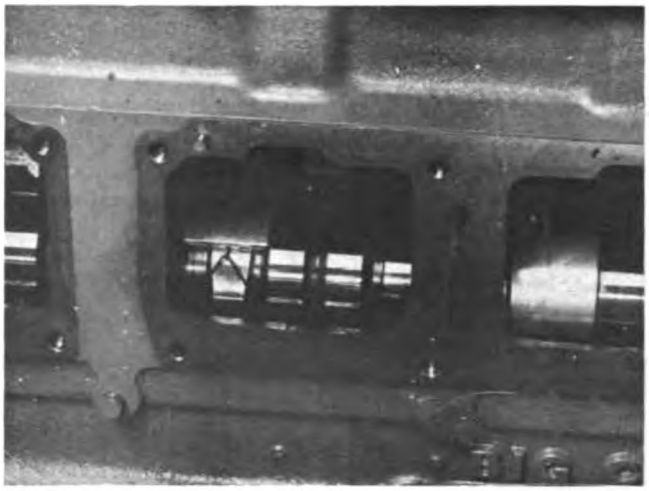

Fig. 0-53 (N100152). Use The 3375268 Pilot To Prevent Damage To The Camshaft.

2. Remove the cup plug at the rear of the camshaft bore.

The Connecting Rod and Piston Assembly

1. Clean the carbon from the upper inside wall of each cylinder liner, Fig. 0-54. Use an emery cloth to polish the liners. Do not damage the liners when you polish them.

Fig. 0-54 (N100153). Remove The Carbon From The Cylinder Liner

2. Remove the caps from the connecting rods:
   a. For connecting rods that have capscrews, loosen the capscrews approximately 3/8 inch [9.5 mm]. Hit the heads of the capscrews with a soft hammer to push the

Digitized by Google

cap from the dowels in the connecting rod. Remove the capscrews and the cap.

b. For connecting rods that have bolts, remove the nuts and washers. Pull the cap from the connecting rod. Use a soft hammer to push the bolts from the rod.

Caution: Do not use a hammer or screwdriver to remove the caps from the connecting rods.

3. Install Part No. 3375601 Nylon Guide Screws in the connecting rod to prevent damage to the cylinder liner. Push the connecting rod and piston assembly from the cylinder liner, Fig. 0-55. Make sure each connecting rod and cap has a label or mark for identification.

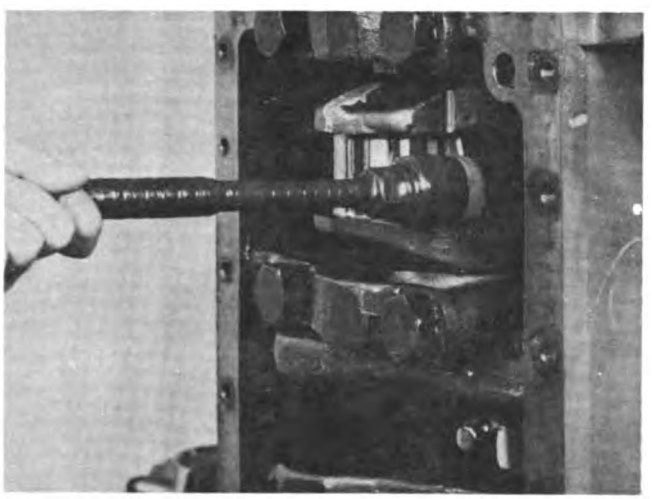

Fig. 0-55 (N100154). Remove The Connecting Rod And Piston Assembly.

4. Remove and discard the piston rings. Remove the retaining rings that hold the piston pin.
5. To remove the pin from the piston, heat the piston for two minutes with boiling water. Then push the pin from the piston with your fingers.

Warning: Wear rubber gloves to prevent injury from the boiling water.

Caution: Do not use a hammer or other tools to remove the piston pin.

The Crankshaft and Main Bearings

1. Remove the capscrews and lockplates that hold the main bearing caps to the cylinder block, Fig. 0-56.

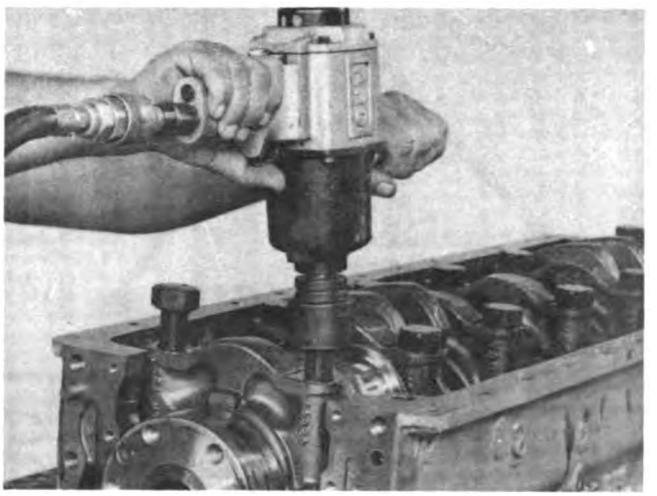

Fig. 0-56. Remove The Main Bearing Capscrews.

2. Use the Part No. ST-1178 Main Bearing Cap Puller to pull the main bearing caps from the dowels in the cylinder block, Fig. 0-57. Make sure all the bearing caps have a mark so that they can be installed in the correct position.

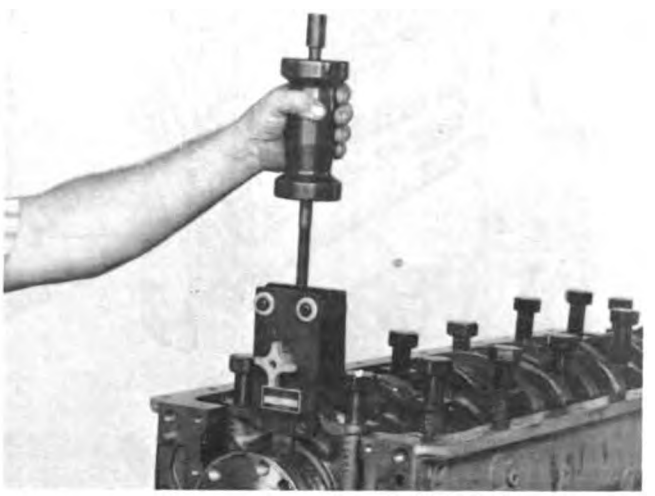

Fig. 0-57. Remove The Main Bearing Caps.

3. Remove the bearing caps and bearing shells.
4. Use a hook protected with a rubber hose or a lifting strap to remove the crankshaft, Fig. 0-58. Be careful not to damage the surface of the crankshaft.
5. Remove the bearing shells from the cylinder block . Remove the ring dowels from the cylinder block. Put a mark on the bearing shells showing the position from which they were removed.

Digitized by Google

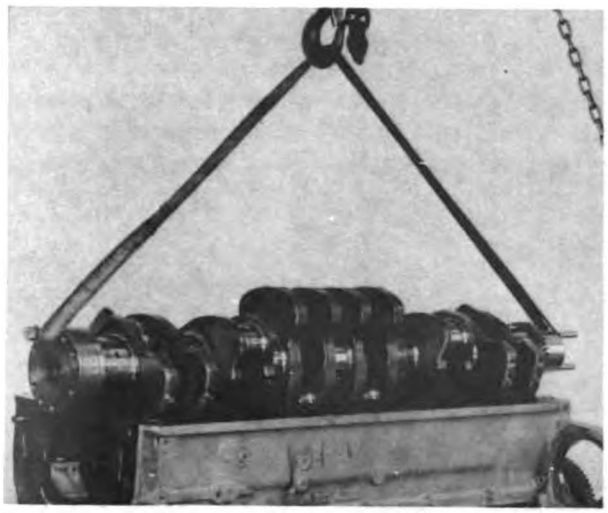

Fig. 0-58. Remove The Crankshaft.

The Cylinder Liners

Use the Part No. 3376015 Cylinder Liner Puller to pull the cylinder liners from the cylinder block. Discard the O-rings and crevice seals. If shims are used under the liners, do not discard the shims.

Digitized by Google

Group 1

This section includes the cylinder block, cylinder liners, crankshaft, bearing shells, connecting rods, pistons, camshaft, rear cover, gear cover and vibration damper.

Cylinder Block

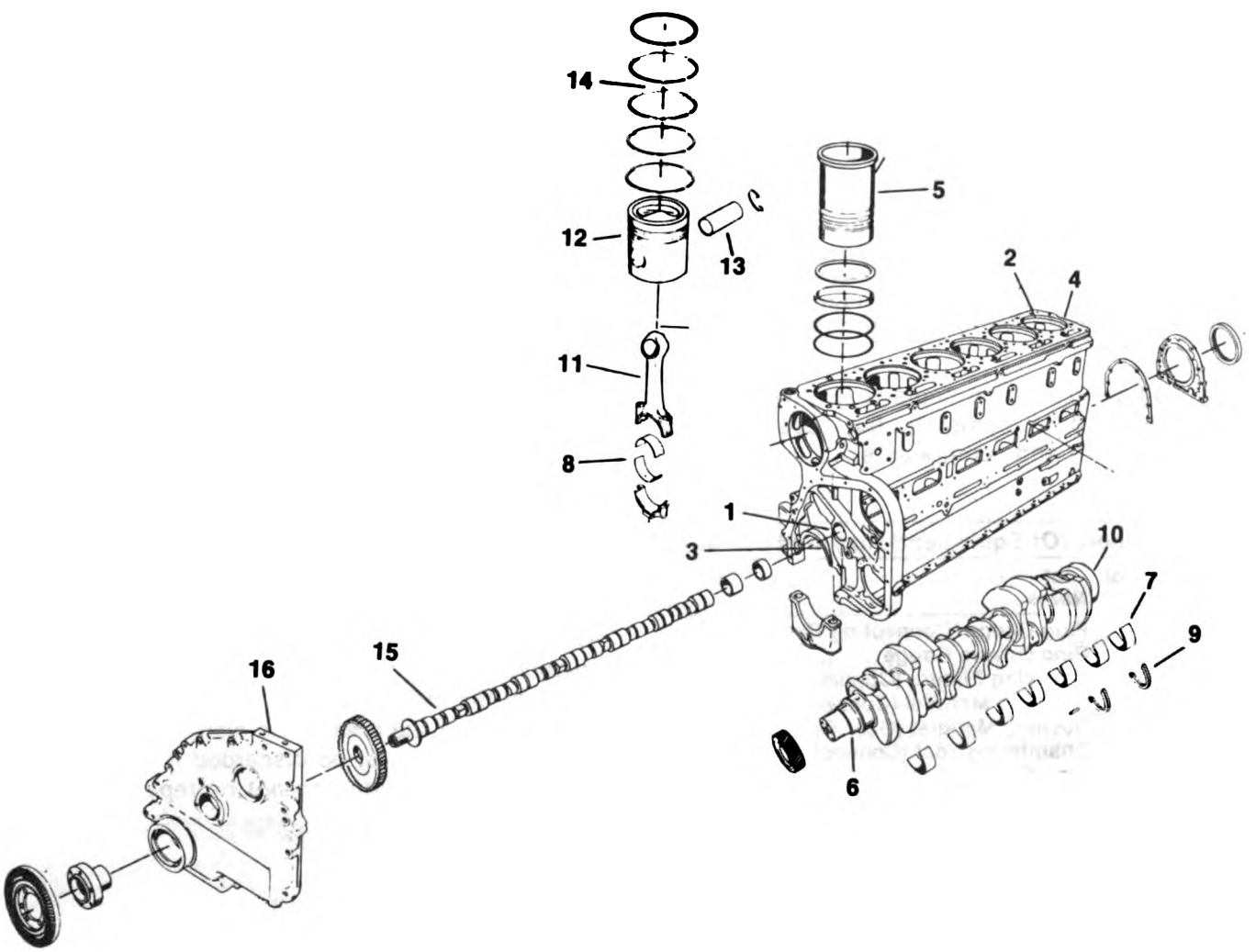

1. Camshaft Bushing Bore
2. Cylinder Liner Counterbore
3. Main Bearing Bore
4. Cylinder Block
5. Cylinder Liner
6. Crankshaft
7. Main Bearings
8. Rod Bearings
9. Crankshaft Thrust Ring
10. Crankshaft End Clearance
11. Connecting Rod
12. Piston
13. Piston Pin
14. Piston Ring
15. Camshaft
16. Gear Case Cover

Fig. 1-1, (N101113). Cylinder block — exploded view.

Digitized by Google

Service Tool List

To repair the cylinder block and components according to the instructions given in this group, the following service tools or tools of equal quality are required.

Service Tools (Or Equivalent) Required

Service Tool Number	Tool Name
ST-1010	Counterboring Tool (Water Hole)
ST-1065	Tool Holder
ST-1168	Counterbore Salvage Tool
ST-1177	Boring Tool (Main Bearing Bore)
ST-1228	Camshaft Bushing Drive Kit
ST-1250	Cylinder Liner Bore Salvage Tool
ST-1252	Concentricity Gauge
ST-1287	Boring Tool (Lower Cylinder Liner Bore)
ST-1295	Counterboring Tool (Cylinder Liner)
ST-1295-18	Adapter Plate
ST-1318	Chamfer Tool
3375115	Boring Machine
3375151	Oil Seal Installation Tool
3375153	2½" Cam Cup Plug Driver
3375154	2½" Cam Bushing Drive Kit
3375268	2½" Cam Installation Sleeve
3376028	Head Capscrew Thread Salvage Tool

The following Service Tools or equivalent tools can be used to complete the repairs to the cylinder block and components.

Service Tools (Or Equivalent) Required

Service Tool Number	Tool Name
ST-305	Plug Gauge (Connecting Rod)
ST-560	Ring Groove Gauge
ST-561	Checking Fixture (Connecting Rod)
ST-563	Locating Mandrel (Connecting Rod)
ST-598	Bushing Mandrel (Gear Cover)
ST-861	Chamfering Tool (Connecting Rod)
ST-896	Ring Gauge (Connecting Rod)
ST-897	Ring Gauge (Connecting Rod)
ST-903	Ring Gauge (Main Bearing Bore)
ST-1171	Bushing Mandrel (Accessory Drive)
ST-1178	Puller (Main Bearing Cap)
ST-1184	Cylinder Liner Hold Down Tool
ST-1242	Mandrel Set
ST-1259	Front Oil Seal and Wear Sleeve Driver/Puller
3375151	Oil Seal Expander
3375053	Thrust Surface Cutter
3375361	Heating Oven
3375840	Gear Puller
3375432	Crack Detection Kit
3376220	Gauge Block

The Cylinder Block

Inspection

Carefully inspect any parts that are to be discarded or used again. Inspect all surfaces for wear or damage. Discard any damaged parts.

Note: Inspect the cylinder block on a flat surface to prevent distortion. Do not inspect the cylinder block on the engine stand.

Use the Dye to find the Cracks in the Cylinder Block

1. Clean the area that is to be checked with Kerosene or cleaning solvent.
2. Use the Part No. 3375432 Crack Detection Kit to help you find cracks. Apply the dye to the area. Wait approximately 15 minutes. This will give the dye enough time to enter a crack if there is one. Do not use compressed air to dry the dye.
3. Remove the extra dye from the area with a clean dry cloth.
4. Apply the developer so that the crack will show. Cracks will show as a solid or broken line. A joint in the forging will also show as a solid or broken line. You must be able to know the difference between a crack and a joint in the forging. (Cavitation in the casting will show as small round marks.)

Corrosion

Corrosion frequently occurs on the parts of the cylinder block nearest to the cylinder liners. Discard the cylinder block if the area cannot be cleaned, or if the area has a distortion. Also, the cylinder block must be discarded if the damage caused by corrosion can not be repaired with a sleeve.

The Camshaft Bushing

Inspection

Use a bore gauge or a micrometer that measures the inside diameter of a bore to measure the inside diameter of the camshaft bushing, Fig. 1-2. Replace the bushings if they are worn larger than the limit in Table 1-1 (Ref. No. 1).

Digitized by Google

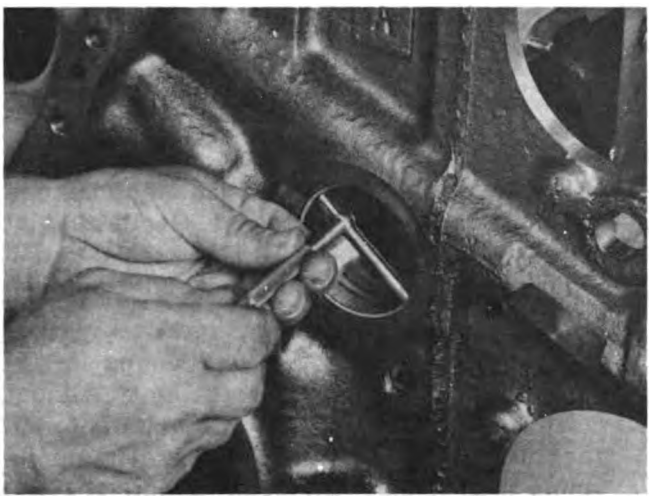

Fig. 1-2. Measure the Camshaft Bushing.

Replacement

Replace the bushings if they have scratches or damage. Also replace the bushings if they have moved inside the bore in the cylinder block. If the bushings have moved inside the bore, check the size of the bore. The size of the bore is listed in Table 1-1 (ref. No. 1). If the bushings do not need to be replaced, make sure the oil holes in the bushings and the oil passages in the cylinder block are aligned correctly.

To remove the bushings for the 2 inch camshaft, use the following tools from the Part No. ST-1228 Camshaft Bushing Driver Set, Fig. 1-3.

ST-1228-1	Slide Hammer
ST-1228-2	Rod
ST-1228-3	Mandrel Shank
ST-1228-4	Shaft Assembly
ST-1228-5	Guide
ST-1228-9	Driver

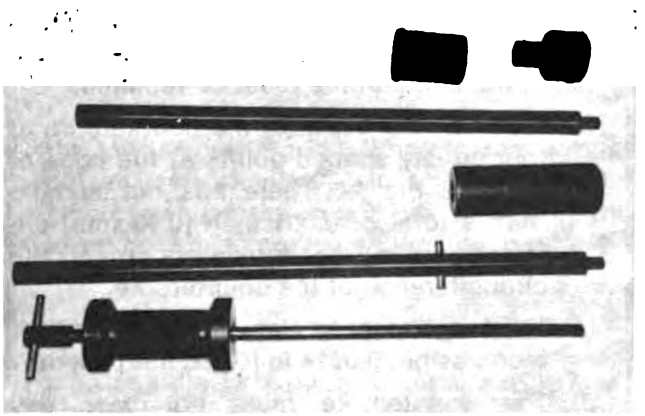

Fig. 1-3. ST-1228 Camshaft Bushing Drive

1. Assemble the tool components.
2. Insert the tool assembly through the camshaft bore until the driver is against the camshaft bushing.
3. Hit the slide hammer against the shaft assembly until the bushing is removed from the camshaft bore.
4. If the flywheel housing is mounted to the cylinder block, use the Part No. ST-1228-13 Puller Assembly instead of the Part No. ST-1228-9 Driver to remove the rear bushing. Insert the assembly through the bore until the pins of the puller assembly are engaged behind the bushing. Hit the slide hammer against the T-handle until the bushing is removed from the bore.

The first engines assembled with a 2-1/2 inch camshaft used a camshaft bushing with a wall thickness of 1/16 inch [1.59 mm]. The engines now assembled with a 2-1/2 inch camshaft use a bushing with a wall thickness of 3/32 inch [2.38 mm]. The inside diameter of the bushings are the same. The bore in the cylinder block for the bushing with the thicker wall is larger. Different tools are required to remove and install these two bushings. To find which bushing is in the cylinder block, measure the bore for the camshaft bushing. The bore in the cylinder block for the bushing with the thinner wall measures 2.6245 to 2.6255 inch [66.66 to 66.68 mm]. The bore in the cylinder block for the bushing with the thicker wall measures 2.6865 to 2.6875 inch [68.23 to 68.26 mm].

To remove the thinner bushings for the 2-1/2 inch camshaft, use the same procedure as for the 2 inch camshaft and the following tools.

ST-1228-1	Slide Hammer
ST-1228-2	Rod
ST-1228-3	Mandrel Shank
ST-1228-4	Shaft Assembly
ST-1228-10	Driver
3375154	Guide

If the flywheel housing is mounted to the cylinder block, follow the procedure in Step 4 for the 2 inch camshaft. Use Part No. 3375863 Puller instead of the Part No. ST-1228-10 Driver.

Digitized by Google

To remove the thicker bushings for the 2-1/2 inch camshaft, use the procedure for the 2 inch camshaft and the following tools.

ST-1228-1	Slide Hammer
ST-1228-2	Rod
ST-1228-3	Mandrel Shank
ST-1228-4	Shaft Assembly
ST-1228-6	Guide
3375861	Driver

If the flywheel housing is mounted to the cylinder block, follow the procedure in Step 4 for the 2 inch camshaft. Use Part No. 3375863 Puller Assembly instead of the Part No. 3375861 Driver

To Install the Bushings for the Camshaft.

Caution: The Big Cam (2½ inch) engines that use the thicker wall (3/32 inch) camshaft bushings must have the bushings installed as shown in Fig. 1-4. The engine will be damaged if the bushings are not installed into the correct location.

1. Make sure the holes for oil are open in the bore for the bushings.
2. Use the tool assembly that was used to remove the bushings.
3. Slide the bushing on to the driver and align the oil holes in the bushing with the oil holes in the bore.
4. Hit the slide hammer against the shaft until the bushing is in position in the bore.
5. Make sure the oil holes in the bushing and the bore are in alignment. The alignment notch in the bushing for the No. 7 bore must align with the oil drain in the bore.

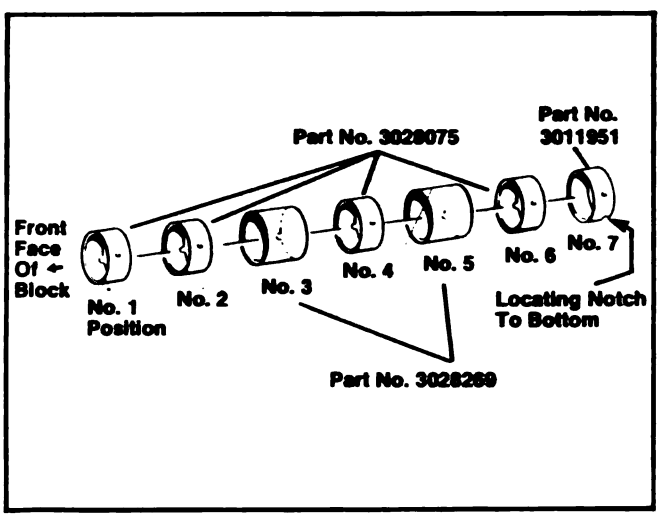

Fig. 1-4. Install The Thicker Wall Bushings Into These Locations (Big Cam Engines).

The Cylinder Liner Counterbore

Inspection

1. The top of the cylinder block must be flat and without damage or distortion. Use a straight edge and a 0.002 inch [0.05 mm] feeler gauge to check the surface.
2. Check the upper counterbore for the cylinder liner. Remove any dirt or rough edges so that the liner can enter the cylinder block without distortion. Measure the diameter of the counterbore (A) Fig. 1-5. If the diameter is more than 6.5635 inch [166.713 mm], or if the depth of the counterbore (B) Fig. 1-5 is more than 0.412 inch [10.466 mm], the counterbore must be repaired by installing a sleeve.

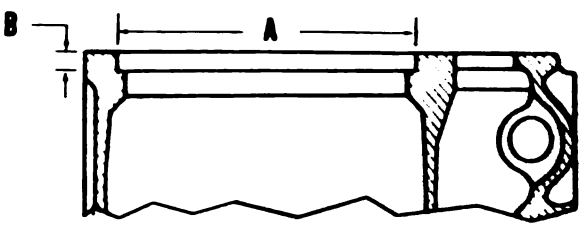

A Upper Liner Counterbore
B. Counterbore Depth

Fig. 1-5 (N10103). Cross-Section of The Counterbore for The Cylinder Liner

3. Make sure the counterbore meets the following conditions. If it does not meet these conditions, the counterbore must be repaired.
   a. Measure the depth of the counterbore at four equaly spaced points at the edge of the bore, Fig. 1-6. There must not be more than a total of 0.001 inch [0.03 mm] difference in the measurements around the circumference of the counterbore.
   b. The ledge must be flat with the top of the block within 0.0014 in [0.036 mm] overall.
   c. The counterbore must not have any damage.

Digitized by Google

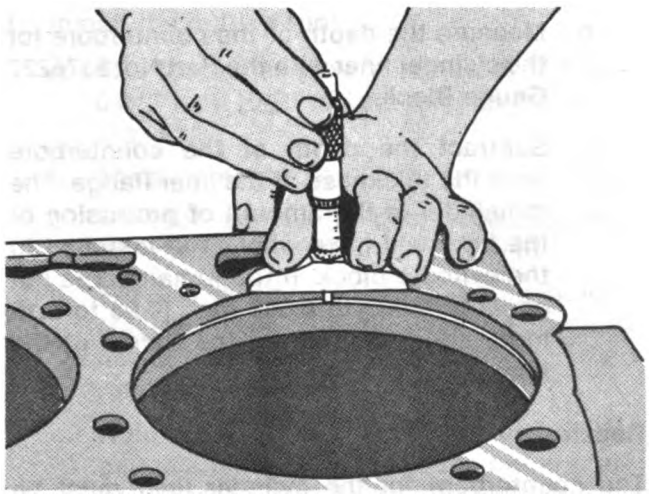

Fig. 1-6 (N10105). Measure The Depth of The Counterbore.

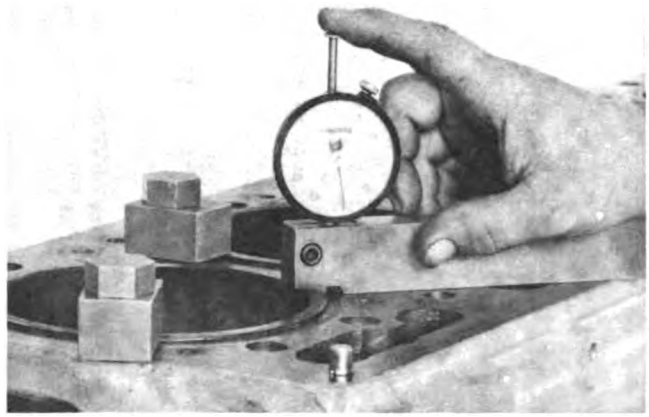

Fig. 1-7. Measure the Cylinder Liner Protrusion.

4. To check the protrusion of the cylinder liner:

   a. Install the liner in the cylinder block. Do not put the O-rings on the cylinder liner. Use the Part No. ST-1184 Cylinder Liner Hold-Down clamps to hold the liner in the cylinder block. Make sure the clamps are installed so that there is equal pressure on the liner. Tighten the clamps to 50 ft.-lb. [68 N•m) torque.

Note: You do not need to use shims for the cylinder liner unless the counterbore has been repaired. If the counterbore has been repaired, shims are available in the following thicknesses: 0.007, 0.008, 0.009, 0.020, 0.031 and 0.062 inch [0.18, 0.20, 0.34, 0.51, 0.79 and 1.57 mm].

   b. Use the Part No. 3376220 Gauge Block to measure the liner protrusion, Fig. 1-7. Shims can be placed under the flange of the cylinder liner to make the liner protrusion the required 0.003 to 0.006 inch [0.08 to 0.15 mm].

5. Measure the clearance between the liner and the lower bore, Fig. 1-8. The clearance must not be more than 0.006 inch [0.15 mm]. The liner can touch the lower bore if touching the lower bore does not cause the liner bore to be out-of-round.

6. Measure the liner bore for out-of-round:

   a. Use a dial bore gauge to measure the bore.

   b. Measure the bore at points "C", "D", "E", "F" and "G". Measure each point in the direction "AA" and "BB" as shown in Fig. 1-9.

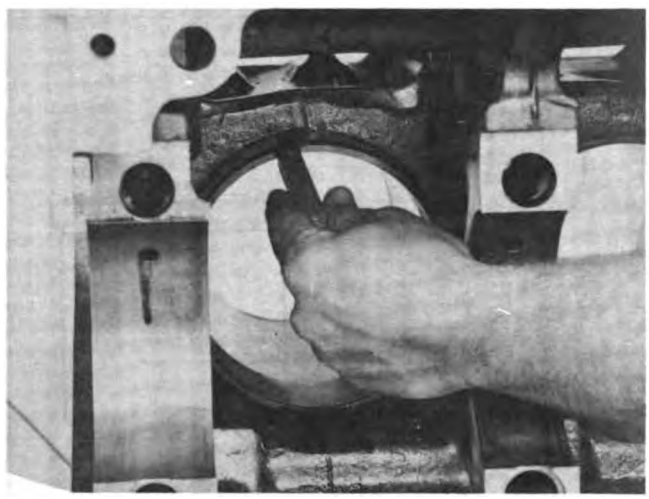

Fig. 1-8. Check The Clearance Between The Cylinder Liner And Lower Bore.

   c. At the point "C" which is approximately 1 inch [25.4 mm] below the top of the liner, the liner bore can not be more than 0.003 inch [0.08 mm] out-of-round.

   d. At points "D", "E", "F" and "G", the liner bore can not be more than 0.002 inches [0.05 mm] out-of-round.

7. Another method of checking the protrusion of the cylinder liner is:

   a. Measure the thickness of the flange on the liner. Do not include the bead on the top of the flange when you measure the flange, Figs. 1-10 and 1-11.

Digitized by Google

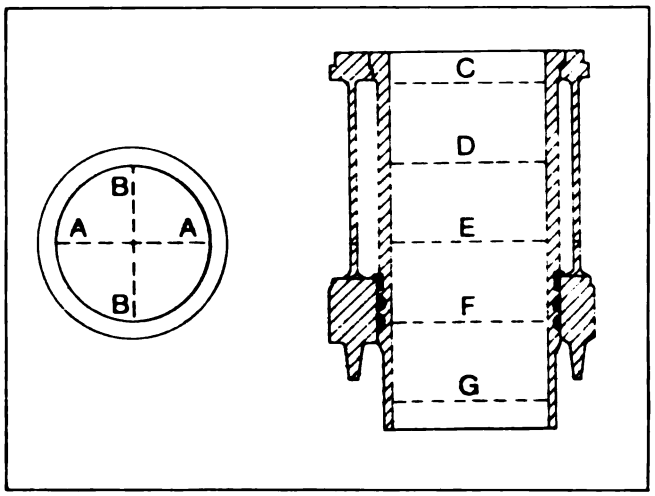

Fig. 1-9 (V401105). Cylinder Liner Check Points.

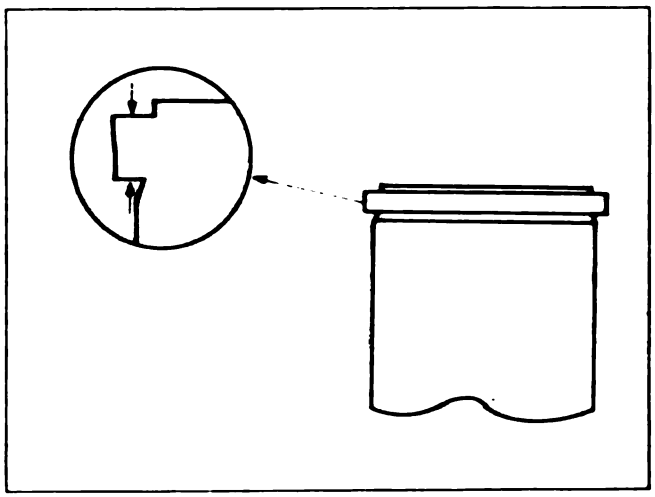

Fig. 1-10 (V401104). The Cylinder Liner Flange.

Fig. 1-11 (V40123). Measure The Cylinder Liner Flange.

b. Measure the depth of the counterbore for the cylinder liner with the Part No. 3376220 Gauge Block.

c. Subtract the depth of the counterbore from the thickness of the liner flange. The remainder is the amount of protrusion of the liner will have when it is installed in the cylinder block. If the remainder is not equal to 0.003 to 0.006 inch [0.08 to 0.15 mm], add shims under the flange of the liner.

Repair

The counterbore for the cylinder liner must be repaired if:

1. Material has been cut from the top surface of the cylinder block.
2. The ledge of the counterbore is not flat or even.
3. The protrusion of the cylinder liner is not correct.

Cut the Bore

Use the following tools from the Part No. 3375455 Cylinder Block Counterbore Tool to cut the counterbore.

ST-1295	Drive Unit Assembly
ST-1065	Cutter Plate

Note: If the Part No. 3375455 is not available, the Part No. ST-1255 Tool may be used to cut the counterbore.

1. Measure the depth of the counterbore with the Part No. 3376220 Gauge Block. Take four measurements, equally spaced, around the counterbore. This will help you to find how much material to cut from the counterbore. This will also show if the surface of the counterbore is not even.
2. Assemble The Counterbore Tool.
   a. Install the Part No. ST-1065 Cutter Plate on the ST-1295 Driver Assembly. Make sure the keyway in the cutter plate engages the key in the drive assembly.
   b. Tighten the capscrew to hold the cutter plate to the drive assembly.

Digitized by Google

3. Install the cutting tool.
   a. The tool must have a radius of 0.008 to 0.012 inch [0.20 to 0.30 mm] as shown in Fig. 1-12.
   b. The side of the tool must be smooth and flat.
   c. The tool must cut the counterbore ledge to the dimensions shown in Fig. 1-13.
   d. Put the cutting tool in the tool holder. Make sure the cutting tool is put correctly in the holder set so that it will cut when rotated clockwise.
   e. Hold a 0.010 inch [0.25 mm] thick feeler gauge around the edge of the cutter plate and over the end of the slot for the cutting tool, Fig. 1-14.
   f. Push the cutting tool out until it touches the feeler gauge. Tighten the setscrew for the cutting tool.
4. Install the assembled counterbore tool on the cylinder block.
   a. Extend the cutter plate into the counterbore.
   b. Align the adapter plate with the capscrew holes in the cylinder block. Fasten the adapter plate with capscrews and flat washers. Tighten the capscrews with your fingers.
   c. Rotate the cutter plate clockwise to make sure the cutter plate is correctly aligned in the counterbore.
   d. Tighten the capscrews for the adapter plate to 50 ft.-lb. [68 N•m] torque.
5. Set the depth of the cut.
   a. Loosen the adjusting collar on the drive assembly.
   b. Put a feeler gauge of the same thickness as the material to be cut from the counterbore between the body of the drive assembly and adjusting collar, Fig. 1-15.

Note: Do not remove more than 0.004 inch [0.10 mm] material per cut.

   c. Rotate the adjusting collar until it touches the feeler gauge. Remove the backlash from the threads in the collar. Tighten the locking screw in the collar.
   d. Remove the feeler gauge.

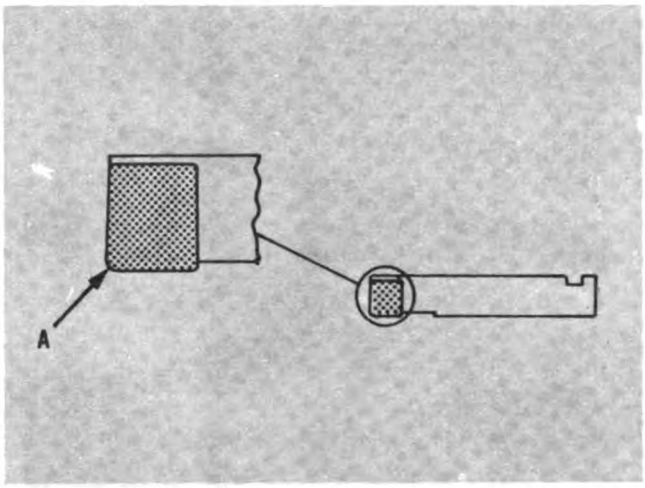

Fig. 1-12 (N20148). Counterbore Tool Bit Radius.

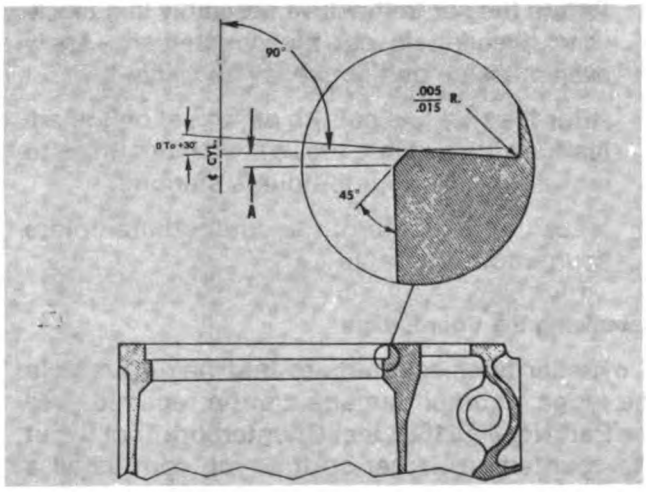

Fig. 1-13 (N10111). Cross-Section Of The Counterbore.

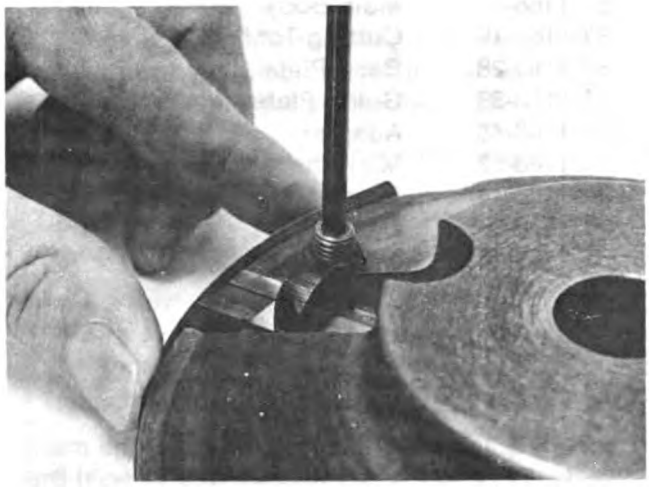

Fig. 1-14. Install The Cutting Tool.

Digitized by Google

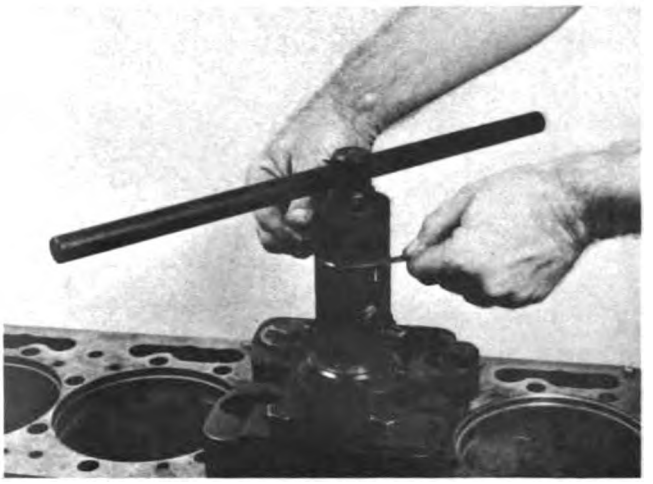

Fig. 1-15. Set The Depth Of The Cut.

6. Rotate the bar in the drive assembly in a clockwise direction to cut the counterbore. Apply even pressure on the bar as you rotate it.
7. After the tool has cut the depth set on the adjusting collar, rotate the bar two more times to make sure the counterbore is smooth.
8. Measure the depth of the counterbore before you remove the tool.

Rebuilding the Counterbore

A cylinder liner counterbore that has a crack in the ledge or other damage can be repaired. Use the Part No. ST-1168 Liner Counterbore Tool to cut the counterbore larger so that you can install a repair sleeve. To cut the counterbore for a sleeve, you need the following tools:

ST-1168-1	Main Body
ST-1168-19	Cutting Tool
ST-1168-28	Base Plate
ST-1168-39	Guide Plate
ST-1168-48	Adapter
ST-1168-52	Micrometer Standard
ST-1168-74	Micrometer
ST-1168-36	Driver Plate
ST-1168-36	Jam Nut
ST-1168-37	Driver Handle

Assemble the Tool

1. Assemble the base plate to the main body.
2. Install guide plate onto the shaft in the main body. Tighten the nut and washer to hold the guide plate.

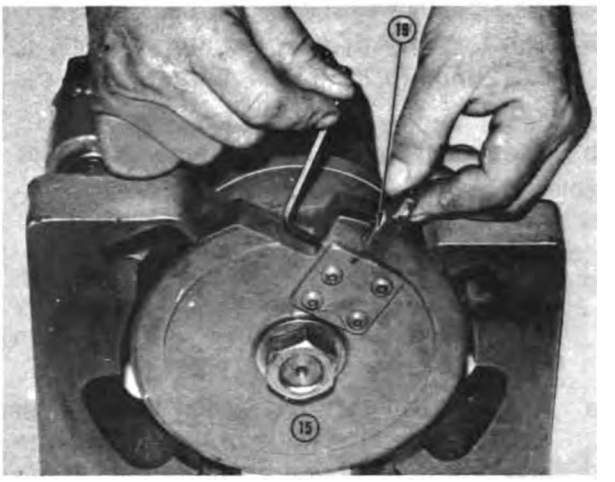

Fig. 1-16 (V40173). Remove The Cutting Tool.

Cut the Counterbore

1. Remove the cutting tool from the guide plate, Fig. 1-16.
2. Put the counterbore tool on the cylinder block over the counterbore to be cut. Fasten the tool to the cylinder block with capscrews and spacers. Tighten the capscrews with your fingers.
3. Align the tool in the counterbore by using the guide plate. Turn the knob on the body counterclockwise to unlock the drive mechanism. Push down on the knob until the guide plate is in the counterbore, Fig. 1-17. Rotate the guide plate to make sure it is aligned and does not touch the sides of the counterbore.

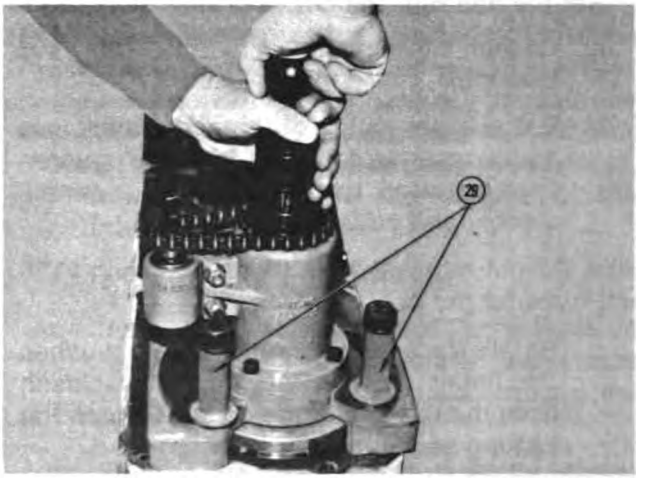

Fig. 1-17 (N101104). Align The Tool In The Counterbore.

Digitized by Google

4. Tighten the capscrews to 25 to 35 ft.-lb. [34 to 47 N•m] torque.
5. Raise the guide plate from the counterbore by pulling up on the knob. Turn the knob clockwise to lock the feed mechanism.
6. Adjust the micrometer to 6.750 inch [171.45 mm].
7. Loosen the setscrew in the cutting tool. Push the adjustable set pin all the way in the cutting tool. Tighten the setscrew.
8. Put the cutting tool in the tool gauge. Make sure the cutting tip of the tool is not against the micrometer spindle. The cutting tip of the tool must be against the hardened pad in the tool gauge.
9. Hold the tool against the hardened pad. Loosen the setscrew to let the pin in the cutting tool come out against the micrometer spindle, Fig. 1-18. Tighten the setscrew.

Fig. 1-18. Adjust The Length Of The Cutting Tool

10. Make sure the length of the cutting tool is set correctly. Turn the micrometer thimble counterclockwise until the spindle touches the tool. Check the reading on the micrometer.
11. Install the cutting tool in to the guide plate and tighten the setscrew to hold the tool, Fig. 1-19. Make sure the cutting tool is all the way in the guide plate.
12. Put a 0.004 inch [0.10 mm] thick feeler gauge between the cutting tool and the cylinder block. Lower the cutting tool on to the feeler gauge by pulling up on the knob while pushing down on the set collar, Fig. 1-20.

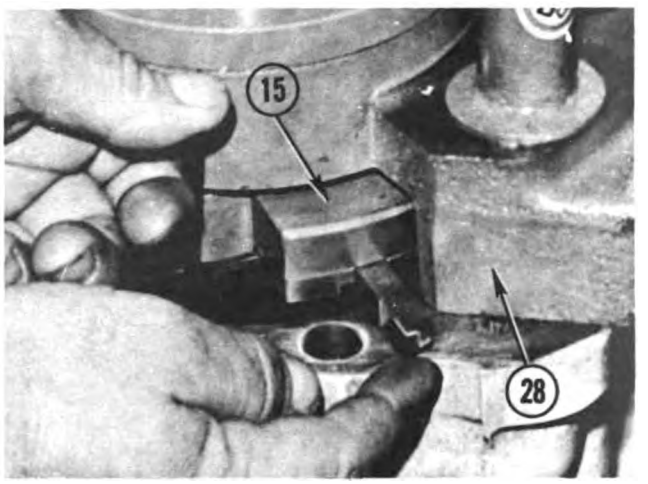

Fig. 1-19. Install The Cutting Tool.

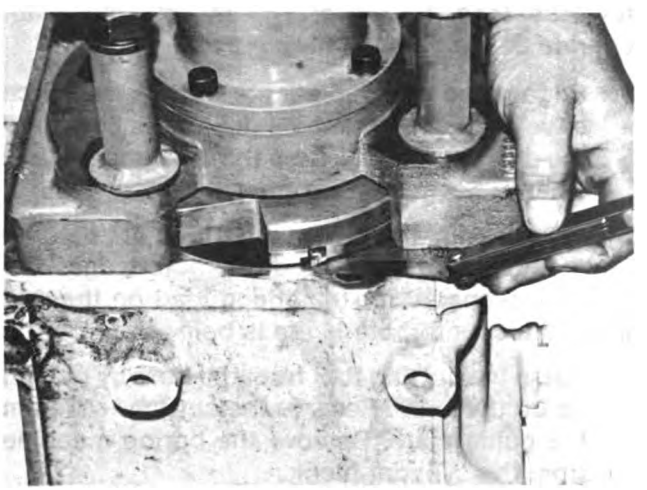

Fig. 1-20. Adjust The Depth Of The Cutter.

Note: The feeler gauge is used to make sure that the sleeve will not be below the top of the cylinder block. After the sleeve is installed, any excess material can be removed.

13. Loosen the setscrew until the part No. 202226 salvage sleeve will fit between the collar and the main body of the boring machine, Fig. 1-21. Tighten the setscrew in the collar.
14. Remove the 0.004 inch [0.10 mm] feeler gauge.
15. Install the drive adapter in a 1/2 or 3/4 inch heavy duty electric drill.

Digitized by Google

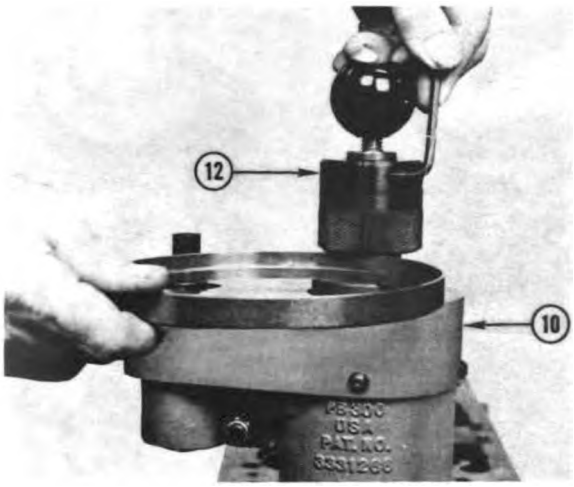

Fig. 1-21. Adjust The Cutting Travel Of The Tool.

Caution: Do not use an electric drill that is rated for less than 10 amperes. The drill must not operate at more than 450 rpm.

16. Engage the drill and adapter with the 1/2 inch drive on the boring machine. Cut the bore until the drill turns freely. Stop the drill immediately when it begins to turn freely.

Note: Approximately halfway through the cut, the tool will begin to cut the counterbore ledge. You must be prepared for the added load on the drill when the counterbore ledge is being cut.

17. Raise the cutting tool from the bore by pulling up on the knob. Remove the cutting tool from the guide plate. Remove the boring machine from the cylinder block.
18. Clean the bore of all metal particles. Remove the sharp edges with an emery cloth.

Install the Salvage Sleeve

1. Clean the bore with a solvent. Do not use a solvent that has a petroleum base.
2. Apply a coat of sealant to the outside surface of the salvage sleeve. Hit the driver with a hammer to push the sleeve into the bore. When the sleeve hits the bottom of the bore, it will make a different sound.
3. Cut the top of the sleeve with a file so that it will be flat with the top surface of the cylinder block.
4. Measure the depth of the counterbore. Use the Part Nos. ST-1295 and ST-1065 to cut the counterbore to a depth of 0.350 to 0.352 inches [8.89 to 8.94 mm].

The Cylinder Liner Bore

Inspection

If the engine has had a piston seizure or the upper counterbore repaired, check the alignment between the counterbore and the lower bore.

The cylinder liner must be removed from the cylinder block before you check the alignment between the counterbore and the lower bore. Use the Part No. ST-1252 concentricity gauge to check the alignment. The alignment must be within 0.005 inch [0.13 mm] of the total indicator reading.

Repair

Use the Part No. ST-1287 Boring Tool to cut the lower bore for the cylinder liner.

The boring tool includes:

A tapered centering ring to align the tool with the counterbore and lower bore.

A gauge rod to set the cutting depth of the tool.

A micrometer set-block to set the cutting tool. After the bore has been cut, a repair sleeve can be installed in the bore.

To Operate the Boring Tool

1. Use the centering ring that will fit in the counterbore for the cylinder liner. Remove the O-ring from the boring tool. Install the centering ring on the boring tool. Make sure the taper in the ring is toward the tool to hold the ring on the tool, Fig. 1-22.
2. Adjust the cutting tool.
   a. Check the micrometer calibration with the micrometer standard. The micrometer must read 5 inches when measuring the standard. Loosen the socket head capscrew to move the micrometer to adjust it to the standard.
   b. Adjust the micrometer to the correct value. See Table 1. Put the cutting tool in the micrometer set-block. Hold the cutting tip of the tool against the hardened pad of the set-block, Fig. 1-23. Loosen the set-

Digitized by Google

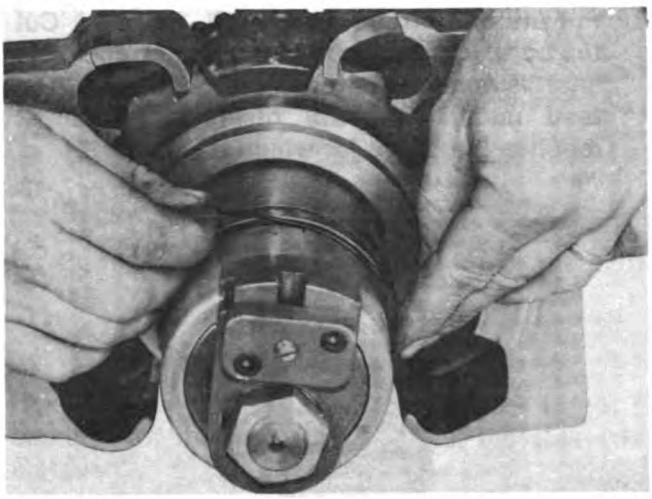

Fig. 1-22 (V10184). Install The O-Ring.

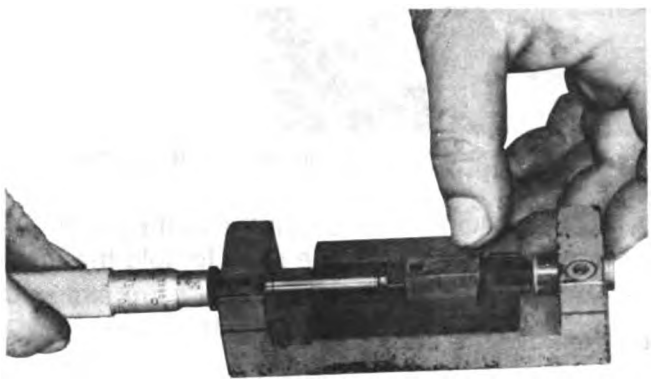

Fig. 1-23 (V10182). Adjust The Cutting Tool.

screw in the cutting tool to let the adjustable pin come against the micrometer spindle. Tighten the setscrew.

3. Install the cutting tool in the tool holder. Make sure the cutting tool is all the way in the tool holder, Fig. 1-24. Tighten the setscrews to hold the cutting tool.
4. Adjust the collar on the depth gauge rod to the proper depth. Align the bottom of the collar with the line on the gauge rod, (1) Fig. 1-25. Tighten the setscrew (2) in the collar.
5. Install the gauge rod to the base plate of the boring tool, (1), Fig. 1-26.
   a. Loosen the drive engagement knob (2). Push the driveshaft (3) down until the cutting tool touches the collar on the gauge rod.
   b. Slide the depth set collar (4) on the drive shaft to the top of the boring tool. This controls the depth that the boring tool will cut in the bore. Tighten the setscrew in the collar.

Table 1: Lower Bore Sleeve and Boring Data

Repair Sleeve Part Number	Boring Diameter inch [mm]	
3375306	6.250/6.245	[158.75/158.78]
3375307	6.300/6.301	[161.57/161.62]
195778	6.361/6.363	[161.57/161.62]

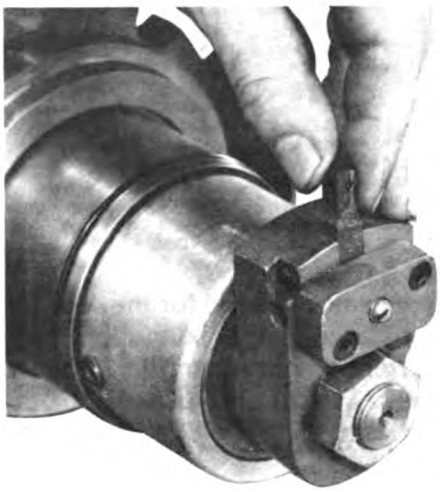

Fig. 1-24 (V10186). Install The Cutting Tool.

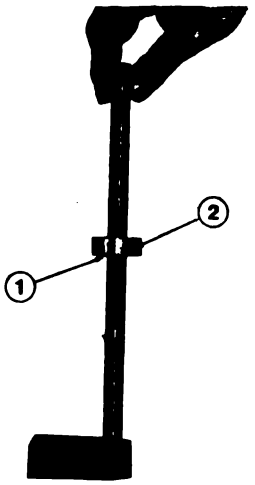

Fig. 1-25 (V10188). Adjust The Collar On The Depth Gauge Rod.

Digitized by Google

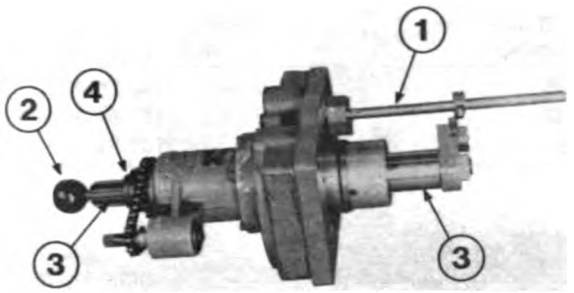

Fig. 1-26 (V10189). Part No. ST-1287 Boring Tool.

Note: The gauge rod is not marked for the 195778 Repair Sleeve. This sleeve is approximately 0.100 inch [2.54 mm] shorter in length than the 3375306 and 3375307 sleeves. Make sure you adjust the gauge rod correctly when the 195778 repair sleeve is used.

6. Remove the gauge rod from the boring tool.
7. Pull on the knob and raise the cutting tool all the way up.
8. Make sure the counterbore and the top of the cylinder block are clean and have no rough edges.
9. Install the boring tool in the cylinder block. Make sure the centering ring is engaged with the counterbore.
10. Install the base plate to the cylinder block with capscrews and spacers. Tighten the capscrews to 50 ft.-lb. [68 N•m] torque.
11. Push down on the knob and slowly lower the cutting tool until it touches the lower bore. Raise the cutting tool 1 inch [25.4 mm] above the lower bore.
12. Tighten the knob. This engages the feed mechanism. Turn the drive shaft with your hand to make sure it rotates freely.
13. Install the drive adapter in a heavy duty 1/2 or 3/4 inch electric drill.

Caution: Do not use an electric drill that is rated at less than 10 amperes. The drill must not rotate faster than 450 rpm.

14. Put the drill on the drive shaft, Fig. 1-27. Cut the bore until the depth set collar on the drive shaft is against the top of the boring tool. The feed mechanism will disengage when it reaches the depth for which it was set.

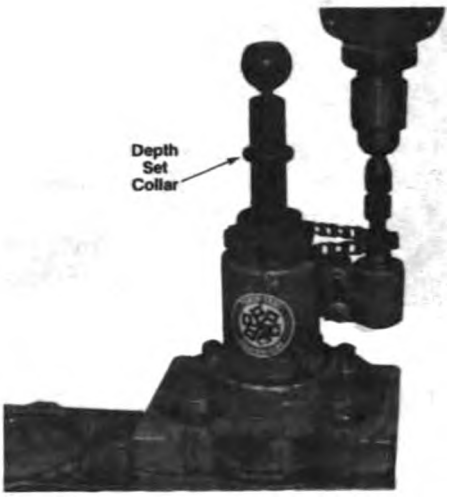

Fig. 1-27 (V50155). Install The Drill Onto The Boring Tool.

15. Loosen the knob and pull the cutting tool all the way up. Tighten the knob to hold the tool up.
16. Remove the boring tool.

Caution: When you remove the tool, be careful. Do not let the cutting tool hit the cylinder block.

17. Inspect and measure the bore. Clean the bore and remove any rough edges with an emery cloth.

Install the Repair Sleeve

1. Clean the bore and the outside diameter of the sleeve with a sealant primer. Apply a narrow strip of bushing sealant to the outside diameter of the sleeve. Make sure the sealant is all the way round the outside diameter.
2. Push the sleeve through the upper bore. When the sleeve is installed in the lower bore, the end with the chamfer will be closest to the top of the cylinder block.
3. Install the sleeve on to the sleeve driver. Put the upper locater on the handle of the sleeve driver. Install the upper locator in the counterbore.

Digitized by Google

4. Hit the handle lightly with a soft hammer to start the sleeve into the lower bore. Then hit the handle with a soft hammer which will push the sleeve into the bore. When the sleeve is in position in the bore, the sleeve driver will rotate freely.
5. Remove the sleeve driver.
6. Remove any sealant on the inside diameter of the sleeve.

Cut the Chamfer for the Repair Sleeve

Use the Part No. ST-1318 Chamfer Tool to cut a chamfer for the repair sleeve after the sleeve is installed.

1. Install the cutting tool in the cutter plate. The tool must be put so that the lower edge of the tool is below the pilot diameter of the cutter plate, Fig. 1-28. Tighten the clamping screws.
2. Install the guide plate (1, Fig. 1-29) on the main shaft.
3. Use a flat washer and nut to install the cutter (3) on the main shaft. Tighten the nut.
4. Install the chamfer tool in the cylinder block.
5. Hold the T-handle of the tool with your hand and loosen the capscrew in the adjusting collar. Lower the cutter plate until the cutting tool touches the upper part of the repair sleeve.
6. Push down on the T-handle and turn it clockwise to cut the chamfer. Cut the chamfer so that it has a smooth surface from the cylinder block to the repair sleeve.
7. If the cylinder block has more than one repair sleeve, tighten the capscrew in the adjusting collar after cutting the chamfer. This will set the depth to cut the remaining chamfers. Turn the capscrew in the top collar into the notch in the lower collar until there is a 1/4 inch [6.4 mm] gap between the collars.
8. Install the chamfer tool into the next bore so that you can cut the chamfer in the repair sleeve.
9. Turn the setscrew in the collar counterclockwise while turning the T-handle clockwise until the upper and lower collars touch. This will be the depth set in Step 7.

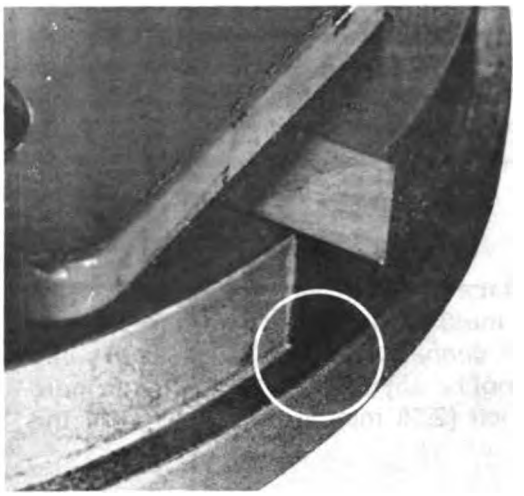

Fig. 1-28 (V10195). The Cutting Tool Installed In The Cutter Plate.

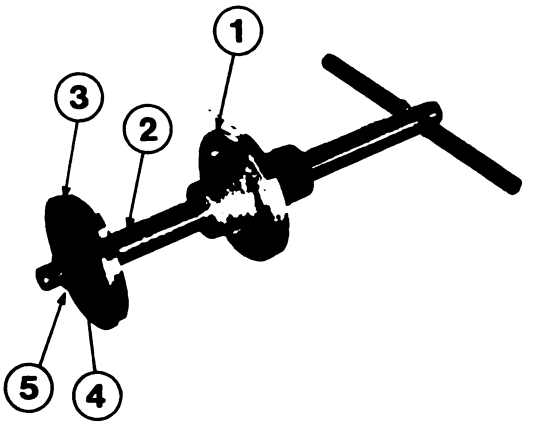

Fig. 1-29 (V10196). The Part No. ST-1318 Chamfer Tool.

10. Repeat Step 9 to cut the chamfers for the remaining sleeves.

The Water Passages

Inspection

1. Check all of the water passages to make sure they are clean and open.
2. Check the water holes in the top of the cylinder block for corrosion that would not allow the cylinder head gasket to seal. A sleeve can be put in the water hole if the corrosion is not more than 1/16 inch [1.49 mm] from the edge of the hole.

Digitized by Google

3. Corrosion must not be nearer than 1/32 inch [0.79 mm] to the counterbore for the cylinder liner. A maximum of 0.010 inch [0.25 mm] of material can be removed from the surface of the cylinder block.

Repair

The top surface of the cylinder block around the water holes must not have any scratches, cracks or corrosion deeper than 0.003 inch [0.08 mm]. There must not be any defect which extends more than 3/32 inch [2.38 mm] from the edge of the water hole.

To repair the water holes, use the following tools from the Part No. ST-1010 Water Hole Counterboring Tool Kit.

ST-1010-1	Bushing Plate
ST-1010-3	Stop Collar
ST-1010-8	Drive Adapter
ST-1010-9	Bushing Driver
ST-1010-10	Locating Pin
ST-1010-11	Counterbore Cutter
ST-1010-15	Capscrew Spacer
ST-1010-19	Allen Wrench
ST-1010-21	Gauge Block

1. Install the bushing plate to the cylinder block. Use a cylinder head capscrew and the capscrew spacer to fasten the plate to the cylinder block. Use your fingers to tighten the capscrew.
2. Put the locating pin into the 9/16 inch [14.30 mm] bushing in the plate and into the waterhole to be repaired, Fig. 1-30.
3. Make sure the locating pin and bushing plate are in position. Tighten the capscrew to 50 ft.-lb. [68 N•m] torque.
4. Remove the locating pin.
5. Adjust the depth of the counterbore cutter:
   a. Loosen the setscrew in the stop collar with the allen wrench.
   b. Put the counterbore cutter into the bushing plate until the cutter is against the cylinder block.
   c. Slide the stop collar up on the counterbore cutter.

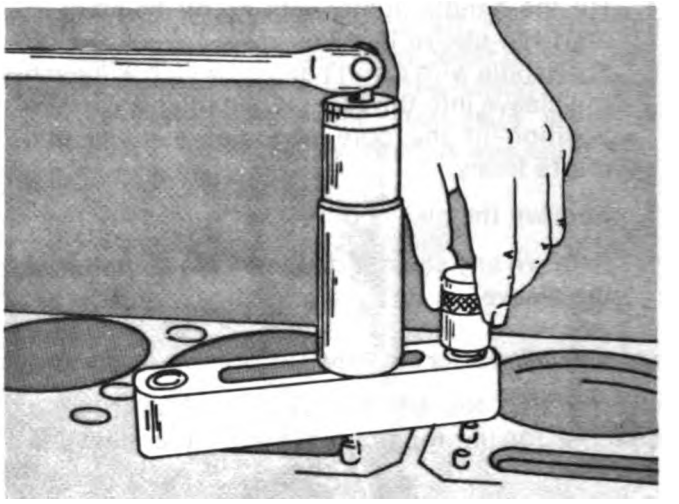

Fig. 1-30. Install The Locating Pin.

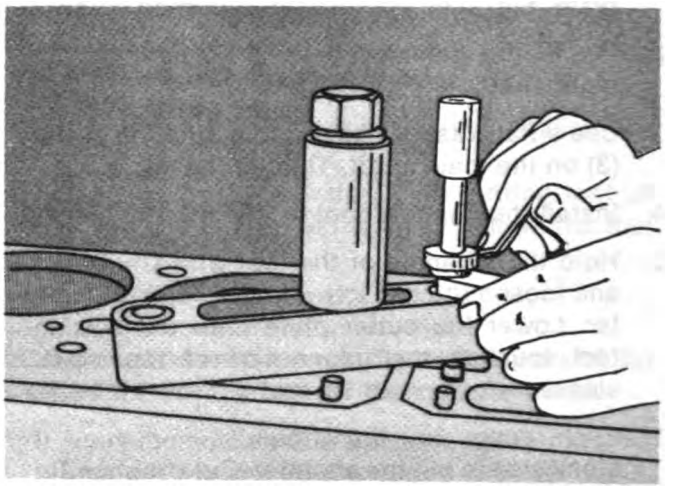

Fig. 1-31. Adjust The Depth Of The Cutter.

   d. Put the gauge block on top of the bushing plate. Hold the curve of the gauge block against the counterbore cutter.
   e. Slide the stop collar down against the gauge block, Fig. 1-31. Tighten the setscrew in the stop collar.
   f. Remove the gauge block.
6. Install the drive adapter in an electric drill.
7. Engage the drill adapter into the counterbore cutter, Fig. 1-32.
8. Start the drill. Apply minimum downward force while cutting the hole.

Digitized by Google

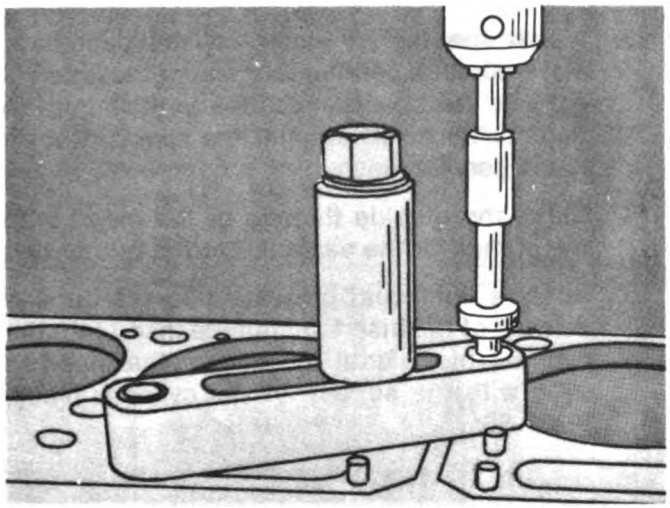

Fig. 1-32. Cut The Water Hole.

9. Remove the counterbore cutter and bushing plate.
10. To install the Part No. 191079 Water Passage Sleeve:
    a. Make sure the hole is clean and all metal particles are removed.
    b. Slide the sleeve onto the end of the bushing driver.
    c. Apply a sealant to the sleeve.
    d. Align the sleeve with the water hole. Hit the bushing driver with a hammer to install the sleeve into the water hole. After the sleeve is installed, part of it will extend above the surface of the cylinder block.
11. Cut the sleeve so that it is even with the top surface of the cylinder block. Use a flat, wide mill file to cut the sleeve.

Salvage of the Cylinder Head Capscrew Holes

Inspection

If the holes (for the cylinder head capscrews) in the cylinder block are damaged, install special thread inserts to repair them. Use the Part No. 3376028 Capscrew Thread Salvage Tool Kit to repair the holes.

Repair

1. Assemble the bushing holder assembly (2, Fig. 1-33) to the base plate (1). Install the base plate to the cylinder block with capscrews and spacers.

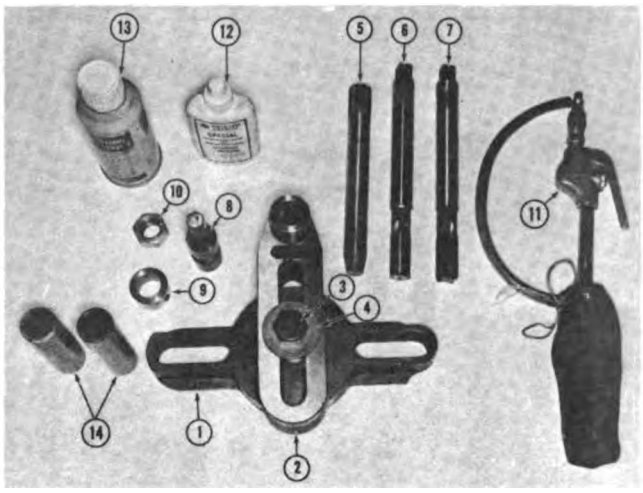

1. Base Plate
2. Reamer Guide Bar
3. Capscrew (standard 5/8-18 x 3)
4. Flatwasher (standard 5/8 I.D.)
5. Locator
6. Reamer — special
7. Tap — special
8. Flex Drive Adapter
9. Stop Collar
10. Nut — special
11. Chip Remover
12. Loctite Retaining Compound
13. Loctite Primer (Grade T)
14. (2) Spacers (standard 4 inches long)
15. (10) Threaded Inserts

Fig. 1-33 (N101122). 3376028 Repair Kit.

2. Put the locating pin (5) through the bushing in the bushing holder and into the hole to be repaired. Tighten the capscrew (3) that holds the bushing holder to the base plate.
3. Remove the locating pin and put the special reamer (6) into the housing.
4. Install the universal drive (8) in a 1/2 or 5/8 inch heavy duty electric drill. Put the drive on the reamer. Cut the hole until the reamer reaches the bottom of the hole.
5. Remove the reamer from the hole. Remove the chips from the hole with the special chip remover, Fig. 1-34.
6. Put the reamer into the hole again to make sure the reamer has reached the botom of the hole. Remove the reamer.
7. To set the cutting depth for the special tap, put the tap in the bushing. Install the stop collar on the tap. Put a thread insert on top of the pilot bushing. Move the stop collar until it is against the thread insert, Fig. 1-35. Tighten the setscrew in the stop collar.

Digitized by Google

Fig. 1-34 (N101123). Remove The Chips From The Hole.

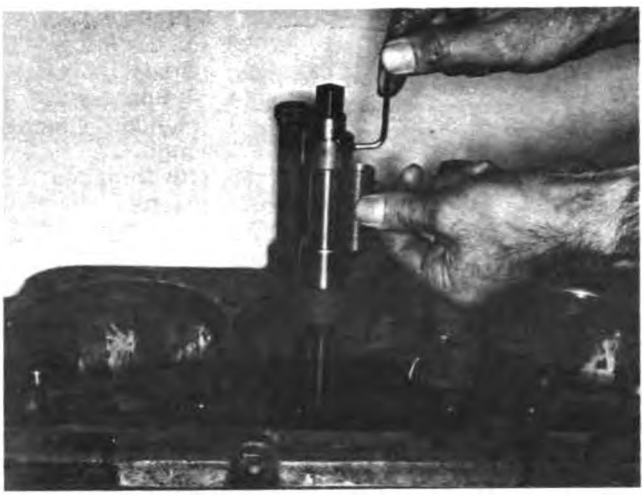

Fig. 1-35 (N101124). Adjust The Stop Collar.

Note: Make sure you use the correct thread insert. The thread insert for the Big Cam II engine is 1 inch [25.4 mm] longer than the other inserts.

3. Use the electric drill with the universal drive to cut the threads. Stop cutting the threads when the stop collar on the tap is 1/4 to 1/8 inch from the pilot bushing.
9. Remove the tap and remove the chips from the hole with the special chip remover.
10. Install the tap in the hole. Use a tap handle or wrench to cut the remaining thread depth.
11. Remove the tap. Make sure all metal particles are removed from the hole.
12. Install the special nut on a cylinder head capscrew.
13. Install the thread insert on the capscrew. Make sure the counterbore end of the insert is against the special nut. Use your fingers to tighten the insert against the special nut on the capscrew.
14. Clean the outside threads of the insert with the primer for the sealant. Let the primer dry.
15. Apply a light coat of sealant to the outside threads of the insert. Install the insert into the cylinder block until the end of the insert is even with the surface of the cylinder block, Fig. 1-36.

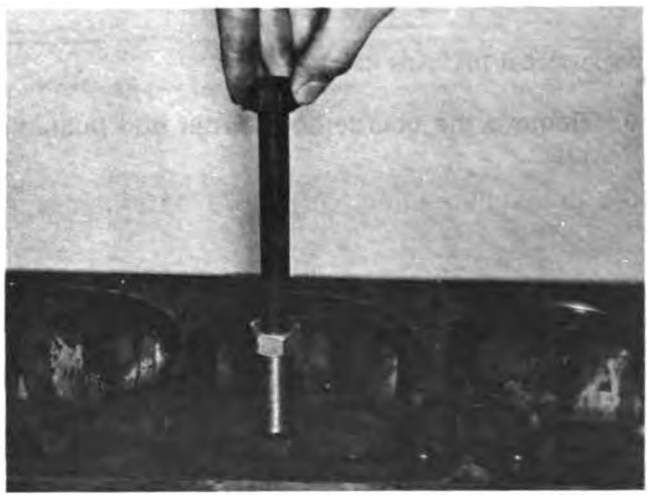

Fig. 1-36 (N101125). Install The Thread Insert.

16. Hold the cylinder head capscrew so it will not turn. Loosen the special nut one quarter of a turn. Remove the capscrew from the insert.
17. Use a file to cut the insert so it will be even with the surface of the cylinder block.

Refinishing of the Top Surface of the Cylinder Block

A maximum of 0.010 inch [0.25 mm] material can be cut from the top surface of the cylinder block to repair the surface.

1. Use either a milling machine or a large grinder. Use the main bearing pads to align the cylinder block on the machine.
2. Remove the dowels from the top surface of the cylinder block. Cut 0.001 to 0.003 inch [0.03 to 0.08 mm] material from the surface on each cut.
3. Check the distance from the certerline of the

Digitized by Google

main bearings to the top surface of the cylinder block, Fig. 1-37. See Table 2 for dimensions. Do not measure the height from the surface of the main bearing pads. The pad surfaces are not on the centerline of the main bearing bore.

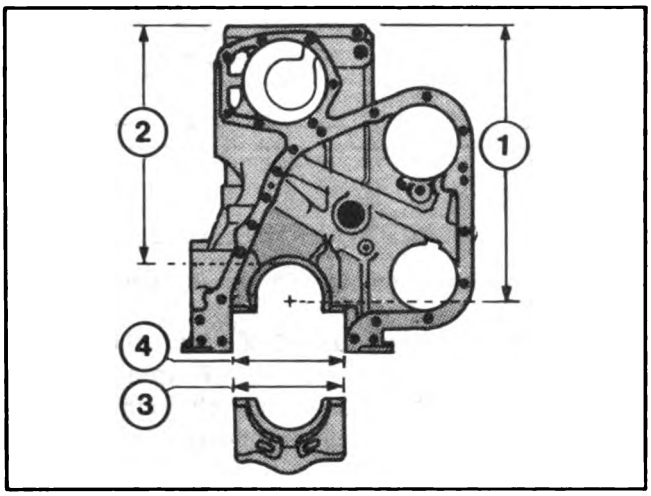

Fig. 1-37 (N10181). Measure The Height Of The Cylinder Block At These Locations.

a. To find this dimension, put the cylinder block, with the top surface down onto a flat inspection plate. Measure from the centerline of the main bearing bore to the flat plate. You can buy a tool to measure the dimension. For more information about the tool, write to: Hartmann's, Inc., P.O. Box 2154, 1330 North 1st Street, Abilene, Texas 79604.

b. Another method to measure the height is to install the Part No. ST-1177-39 Centering Ring into the main bearing bore. Let the centering ring extend approximately half way from the bore. Measure the distance from the centering ring to the top surface of the cylinder block. See Table 3 to find the correct dimension for this method.

c. The complete length of the top surface of the cylinder block must be parallel to the centerline of the main bearing bore within 0.002 in. [0.05 mm]. The top surface must not change from a true plane more than 0.004 in. [0.10 mm] total indicator reading.

4. After cutting the top surface of the cylinder block, the surface must be within 125 R.M.S.

Table 2: Height of the Cylinder Block from the Main Bearing Centerline (1, Fig. 1-37)

New Dimensions		
Minimum	Maximum	Worn Limit
19.003 [482.68]	19.007 [482.78]	18.994 [482.45]

Table 3: Height of the Cylinder Block from the ST-1177-39 Centering Ring (2, Fig. 1-37)

New Dimensions		
Minimum	Maximum	Worn Limit
16.628 [422.35]	16.632 [422.45]	16.619 [422.12]

5. Cut the counterbore for the cylinder liner so that the amount of protrusion for the cylinder liner will be correct.

Main Bearing Caps

Inspection

The width of the main bearing cap (3, Fig. 1-37) must be at least as wide to 0.004 in. [0.10 mm] wider than the main bearing support (4, Fig. 1-37) area of the cylinder block. Before you tighten the capscrews for the main bearing cap, make sure the cap is in contact with the cylinder block. Failure to correctly position the cap in the cylinder block will cause distortion of the cylinder block when the capscrews are tightened.

Replacement

The replacement caps for the main bearings have 0.015 inch [0.38 mm] additional material that must be removed to bring the main bearing bore to the correct size. All the other dimensions of the replacement caps except the number seven cap are correct. The number seven replacement cap must be machined for dowel holes. It must also be machined to the correct thickness for the crankshaft thrust bearings.

Main Bearing Bore

Inspection

1. Assemble the main bearing caps in the correct location in the cylinder block. Tighten the capscrews to the torque given in Table 4.
2. Measure the main bearing bores with a dial bore gauge. Check the inside diameter of each bore at three different points. The bores must be within the following limits:

Digitized by Google

Table 4: Torque Values for Main Bearing Capscrews (See Page 1-38 for Exceptions)

		Minimum Ft.-lb. [N•m]	Maximum Ft.-lb. [N•m]
Step 1.	Tighten to	140 [190]	150 [203]
Step 2.	Tighten to	300 [407]	
Step 3.	Loosen completely		
Step 4.	Tighten to	140 [190]	150 [203]
Step 5.	Tighten to	300 [407]	310 [420]

Minimum 4.7485 inch [120.612 mm]
Maximum 4.7505 inch [120.663 mm]

3. Check the alignment of the bores. Use these tools from the Part No. ST-1177 Main Bearing Bore Tool set.

ST-1177-13	Checking Ring
ST-1177-16	Bore Bar
ST-1177-39	Centering Ring

a. Remove the No. 2 and No. 6 main bearing caps. Make sure the caps and cylinder block surfaces are not damaged.

b. Replace the caps with the Part No. ST-1177-39 Centering Rings. Hit the centering rings with a plastic hammer to position them in the bores.

c. Install, over the centering rings, the main bearing caps that were removed. Tighten the capscrews to the torque given in Table 4.

Note: If you have to use replacement caps in step c, tighten the capscrews to 10 ft.-lbs. [14 N•m].

d. Apply lubrication to the bores of the centering rings and to the Part No. ST-1177-16 Bore Bar. Insert the bar through the centering rings while slowly rotating the bar. The bar must turn easily. Slide one end of the bar out of a centering ring. Slide the Part No. ST-1177-39 Checking Ring on to the bar. Insert the bar into the centering ring.

e. Apply lubrication to the outside diameter of the checking ring. Use the pressure of your fingers to push the checking ring through the bores, Fig. 1-38. As you push the ring through the bores, rotate the bar. If the checking ring will not pass through the bores, check the bores for rough edges.

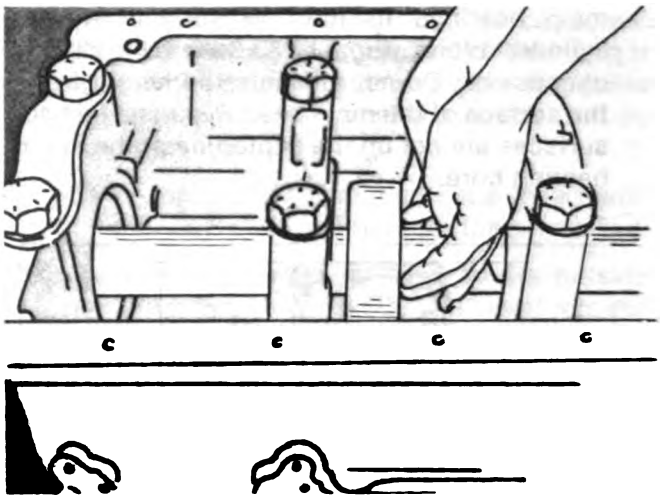

Fig. 1-38. Push The Checking Ring Through The Bore.

f. Insert a feeler gauge, 0.003 inch [0.08 mm] thick and 1/2 inch [12.7 mm] wide, between the bore and checking ring. Evaluate the bores as follows:

(1) The gauge will not enter the bore at any point. The bar rotates easily. The bore is acceptable.

(2) The gauge enters the bore on one side but not on the opposite side. The bar rotates easily. The bore is not in alignment but is acceptable if the bar rotates easily.

(3) The gauge enters the bore and is loose in the bore. The bore is oversize. The bore is not acceptable.

(4) The gauge enters the front side of the bore but not on the rear side. The bore is tapered. The bore is not acceptable.

Repair

To cut the bores to the correct size, use the following tools from the Part No. ST-1177 Main Bearing Bore tool.

ST-1177-2	Cutting Tool
ST-1177-4	Cutting Tool
ST-1177-8	Cutter Holder
ST-1177-13	Checking Ring
ST-1177-16	Bore Bar
ST-1177-17	Bore Feed Assembly
ST-1177-18	Bore Bar Bridge
ST-1177-21	Bridge Boaring
ST-1177-22	Bar Bearing

Digitized by Google

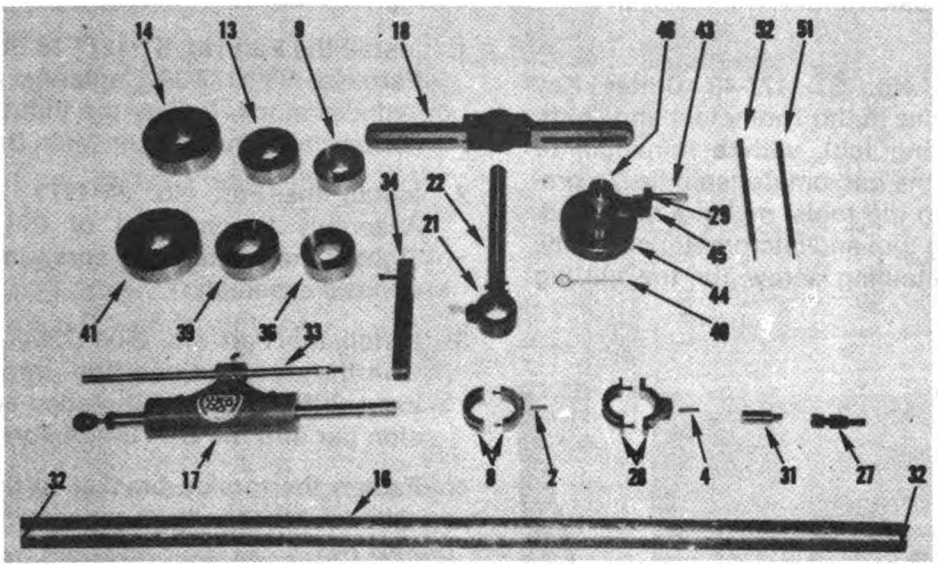

2. Cutting Tool	17. Bore Feed Assembly	31. Drive Adapter	43. Micrometer
4. Cutting Tool	18. Bore Bar Bridge	32. Capscrew	44. Micrometer Base
8. Cutter Holder	21. Bearing Bridge	33. Torsion Bar	45. Micrometer Bracket
9. Checking	22. Bearing Bar	34. Bracket	46. Micrometer Shaft
13. Checking Ring	27. Swivel Joint	36. Centering Ring	49. Cutter Pin
14. Checking Ring	28. Cutter Holder	39. Centering Ring	51. Allen Wrench
16. Bore Bar	29. Capscrew	41. Centering Ring	52. Allen Wrench

Fig. 1-39 (ST-1177). Exploded View Of The ST-1177 Boring Tool.

ST-1177-27	Swivel Joint
ST-1177-28	Cutter Holder
ST-1177-31	Drive Adapter
ST-1177-33	Torsion Bar
ST-1177-49	Cutter Key
ST-1177-34	Torsion Bar Bracket
ST-1177-39	Centering Ring
ST-1177-51	Allen Wrench
ST-1177-52	Allen Wrench
ST-1177-5111	Micrometer

To Cut the Bores for the Main Bearings:

1. Assemble and adjust the Part No. ST-1177-5111 Micrometer and the Part No. ST-1177-28 Cutter Holder. Put the base shaft (46, Fig. 1-39) through the bore of the micrometer bracket (45, Fig. 1-39). Tighten the base shaft into the micrometer base (44, Fig. 1-39).
2. Tighten the screw in the micrometer bracket until the bracket fits tightly on the base shaft. Make sure the hole for the micrometer in the bracket aligns with the hole for the cutting tool in the shaft.
3. Put the Part No. ST-1177-39 Centering Ring on the shaft. Install the micrometer in the bracket.
4. Adjust the micrometer to the value that is marked on the centering ring.
5. Push the micrometer through the bracket until the spindle is against the centering ring. Make sure the micrometer setting remains at the value set in Step 4. Tighten the screw that holds the micrometer in the bracket. Make sure the micrometer spindle turns easily after tightening the screw.
6. Remove the centering ring and put the Part No. ST-1177-28 Cutter Holder on the base shaft.
7. Align the hole for the cutting tool in the holder with the hole in the base shaft. There are lines marked on the holder and the shaft to help you align the holes. Tighten the screws in the cutter holder. Make sure the gaps are equal between the two halves of the cutter holder after the screws are tightened.
8. Install the cutting tool in the tool holder. The cutting tool must be short enough that it will

Digitized by Google

not have any protrusion into the bore of the tool holder.

9. Put the Part No. ST-1177-49 Cutter Key through the holes in the Toolholder and shaft. Push the cutting tool, with a minimum of force, against the micrometer spindle. To prevent damage to the tools, make sure you adjust the cutting tool and micrometer carefully. Tighten the retaining screw for the cutting tool, Fig. 1-40.

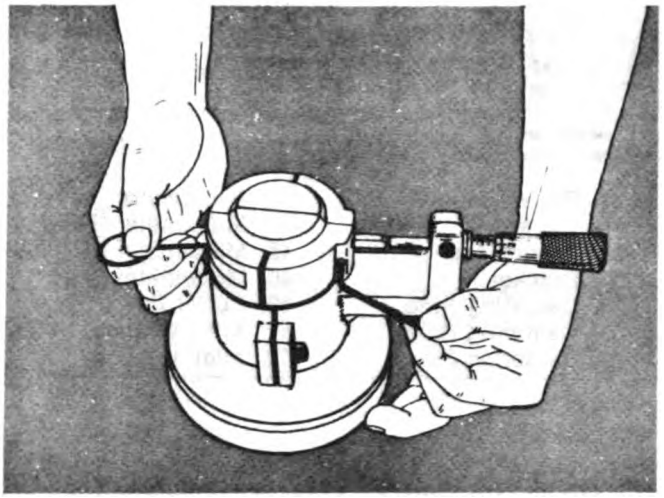

Fig. 1-40. Adjust The Cutting Tool.

Note: Do not adjust the cutting tool to cut all the material from the bore by cutting the bore only one time. This will cause the cutting tool to break. Adjust the tool to cut the bore to a diameter less than 4.7485 inches [120.612 mm]. Adjust the tool to cut a larger diameter each time until the bore measures 4.7485 inches [120.612 to 120.663 mm].

10. Check the setting of the cutting tool. Turn the micrometer counter clockwise to move the spindle from the cutting tool. Turn the micrometer clockwise to move the spindle to the cutting tool. When the spindle touches the tool, check the reading on the micrometer.

Note: Damage to the tool will result if you tighten the spindle against the tool or move the spindle across the tool.

11. Turn the micrometer counter clockwise and move the spindle away from the tool. Remove the tool holder from the base shaft.

Cutting the Bores

1. Install the Part No. ST-1177-16 Boring Bar and Part No. ST-1177-39 Centering Rings in the cylinder block. Follow the instructions given in Step 3 of "Inspect the Main Bearing Bore".

2. Install the Part No. ST-1177-17 Bore Feed Assembly in one end of the boring bar. Tighten the socket head screw in the bar to retain the assembly.

3. Install the Part No. ST-1177-33 Torsion Bar, with the threaded end first, through the feed assembly. Install the threaded end of the torsion bar into the ST-1177-34 Torsion Bracket.

4. Fasten the torsion bracket to the end of the cylinder block with a capscrew and washer, Fig. 1-41.

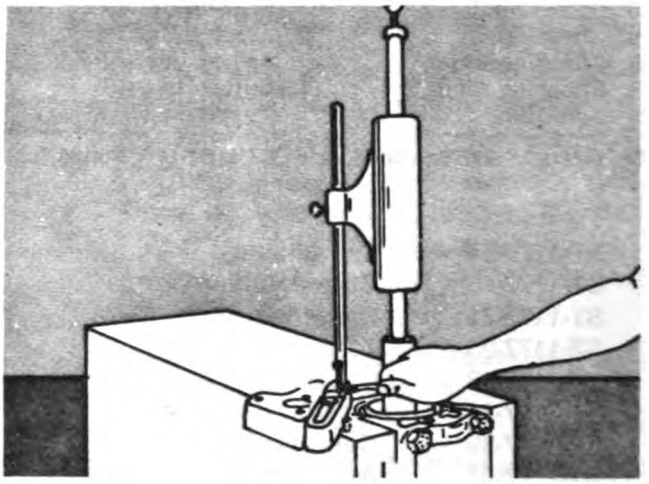

Fig. 1-41. Install The Torsion Bracket To The Cylinder Block.

5. Pull on the plastic knob of the feed assembly until the pin is free of the slot. Turn the knob one-fourth of a complete turn. Pull the feed assembly all of the way back to the knob. Tighten the set screw against the torsion bar to hold the feed assembly in position.

Note: The later model of ST-1177-17 does not have a plastic knob. It has an engagement lever on the side of the assembly. Turn the lever to "open" to adjust the assembly. Turn the lever to "close" to engage the mechanism.

6. Install the square head set bolt in the second threaded hole in the torsion bracket. Tighten

Digitized by Google

the bolt against the cylinder block to hold the bracket in position.

7. Install the Part No. ST-1177-31 Adapter into the other end of the boring bar. Make sure the 1/2 inch square drive at the adapter is pointing out from the bar. Tighten the setscrew in the bar, Fig. 1-42.

8. Install the Part No. ST-1177-27 Swivel Joint in a 1/2 inch electric drill. These instructions are for a drill with right hand rotation.

Caution: Do not use an electric drill that is rated at less than 10 amperes. The drill must not rotate faster than 450 rpm.

9. Install the tool holder on the boring bar, next to the bore to be cut, Fig. 1-43. When the bore is being cut, the boring bar will move toward the feed assembly. Make sure the cutting edge of the cutting tool is turned in the direction the drill rotates.

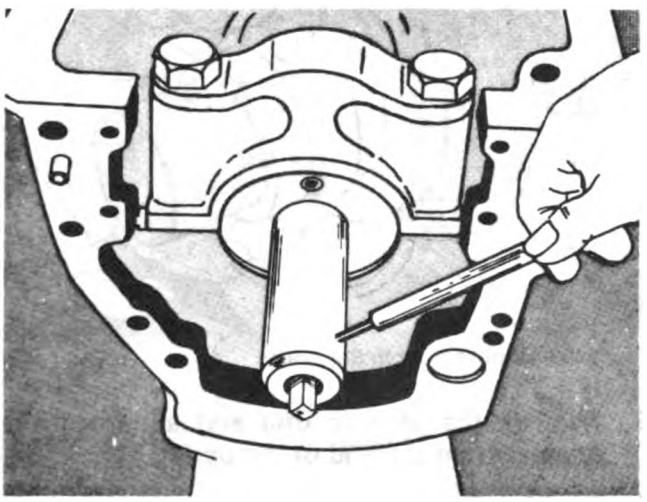

Fig. 1-42. Install The Drive Adapter Into The Boring Bar.

10. Put the swivel joint into the square drive, Fig. 1-44. Engage the mechanism of the feed assembly. Cut the bore. Make sure the boring bar is lubricated when you cut the bore.

11. To cut the next bore:

    a. Remove the tool holder from the boring bar.

    b. Disengage the mechanism at the feed assembly.

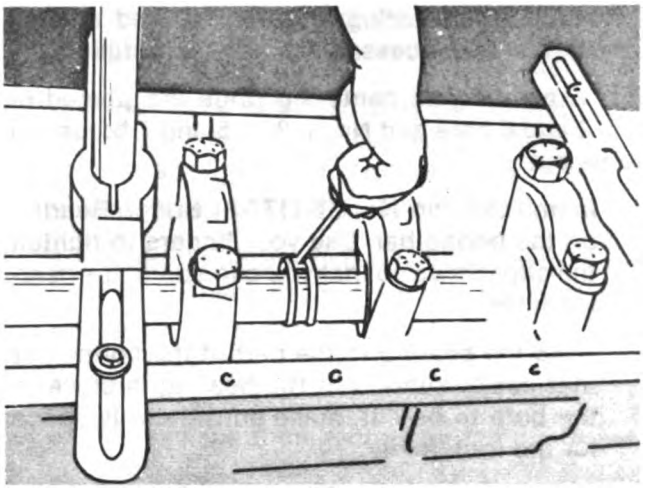

Fig. 1-43. Install The Tool Holder Onto The Boring Bar.

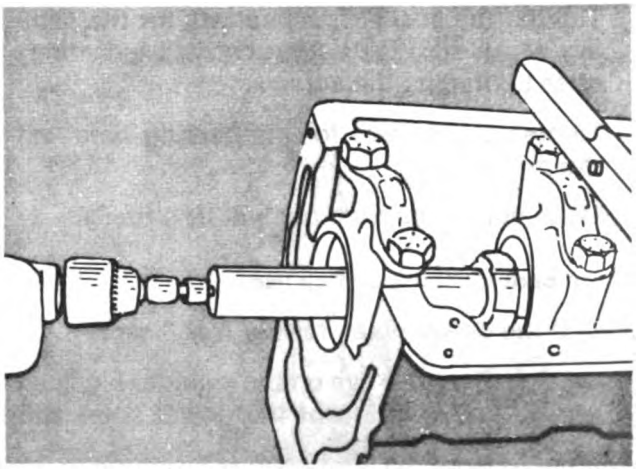

Fig. 1-44. Cut The Bore For The Main Bearing.

    c. Pull the bar back until it stops against the feed assembly.

    d. Engage the mechanism at the feed assembly.

    e. Repeat Steps 9 and 10.

12. Clean the cylinder block. Check the alignment of the bore with the checking ring. Measure the bores with a dial bore gauge. The bores must measure within the following limits:

    Minimum 4.7485 inch [120.612 mm]
    Maximum 4.7505 inch [120.663 mm]

To Use the Bridge for The Boring Bar

The bridges give more support to the boring bar. They also make up for distortion in the cylinder

Digitized by Google

block. If the centering rings are placed equally apart, it is not necessary to use the bridges.

For example: The centering rings are placed in No. 2 and 6 bore and No. 1, 3, 4, 5 and 7 bores are to be cut.

1. Install the Part No. ST-1177-21 Bridge Bearing on the boring bar. Use your fingers to tighten the capscrews so that you can adjust the bearing later.
2. Slide the bearing to the part of the boring bar that needs support. If the bearing is close to the bore to be cut, make sure there is space for the tool holder.
3. Install the Part No. ST-1177-18 Bridge on the bearing bar. Fasten the bridge to the cylinder block with capscrews and washers.
4. Tighten the socket head screws for the bearing. Make sure the boring bar will turn freely after tightening the screws.
5. Tighten the screws for the bearing bore and the bridge.
6. Make sure the boring bar will turn freely.

Cut the Bore for The Rear Cap (No. 7)

1. Drill the dowel holes for the No. 7 cap:
   a. Put a transfer dye on the cylinder block so that the position of the dowel holes will show on the cap.

Note: The dowels must be removed from the cylinder block before the cap is installed.

   b. Install the cap on the cylinder block.
   c. Remove the cap. Use a center punch to put a mark for the location of the dowel holes. Drill the dowel holes in the cap with a 15/64 inch drill, Fig. 1-45.
   d. Install the cap on the cylinder block.
   e. Use a reamer to cut the holes in the cap to the next largest size.
   f. Remove the cap. Install the dowels in the cylinder block. Install the cap to the cylinder block.
2. Repeat Steps 9, 10 and 12 for cutting the bores.

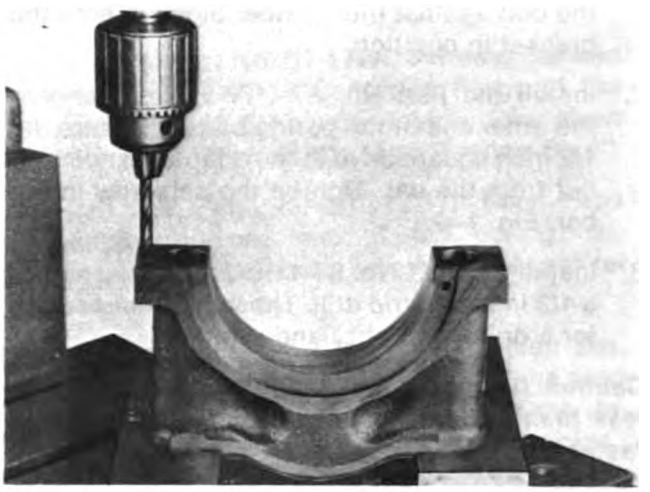

Fig. 1-45. Drill The Dowel Hole In The Rear Main Bearing Cap.

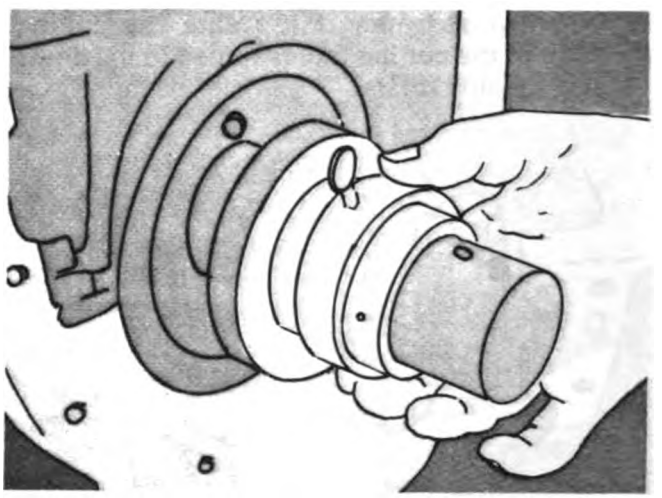

Fig. 1-46. Install The Depth Set Collar.

3. Remove the electric drill and square drive adapter from the end of the boring bar.
4. Remove the feed assembly, torsion bar and bracket.
5. Put the Part No. 3375053 Thrust Bearing Surface Cutter on the boring bar. Install the depth set collar on the opposite side of the surface to be cut, Fig. 1-46.
6. Install the T-handle drive assembly in the end of the boring bar. Tighten the setscrew in the bar, Fig. 1-47.
7. Install the cutter holder. Adjust the cutting tool so it will cut the total surface for the thrust bearing, Fig. 1-48. The tool must be

Digitized by Google

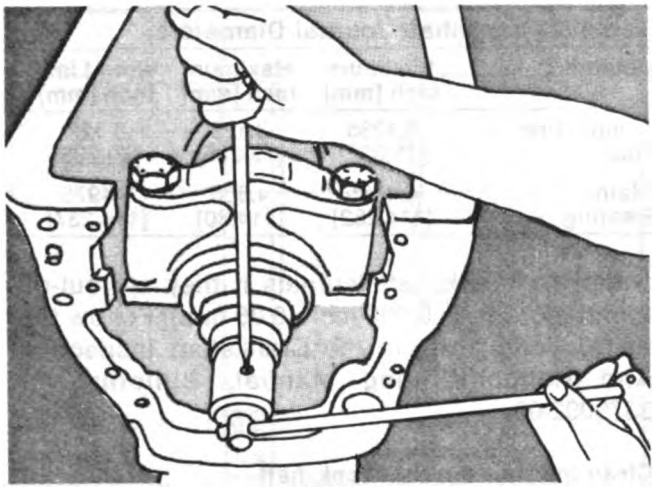

Fig. 1-47. Install The Drive Handle.

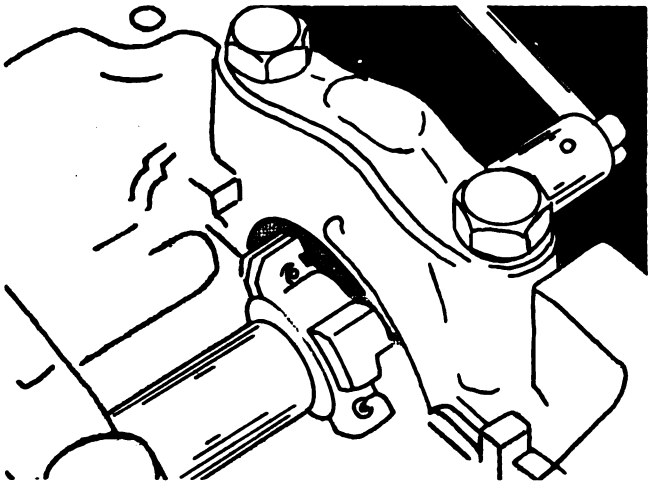

Fig. 1-48. Install The Cutter Holder.

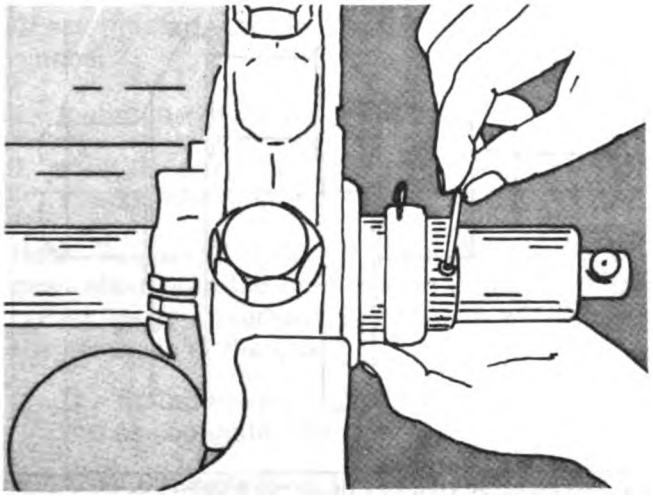

Fig. 1-49. Tighten The Setscrew For The Depth Set Collar

installed in the holder so that it cuts when the shaft is turned clockwise.

8. Set the depth collar so that the cutting tool will make the lightest contact possible with the surface to be cut. Tighten the setscrews for the collar, Fig. 1-49.

9. Turn the boring bar two times in a clockwise direction. Check the pattern and the depth of the cut.

10. To adjust the cutting depth of the tool:

    a. Loosen the thumbscrew on the depth set collar, Fig. 1-50.

    b. Rotate the collar clockwise to increase the depth. Each line on the collar indicates 0.001 inch [0.03 mm].

    c. Tighten the thumbscrew.

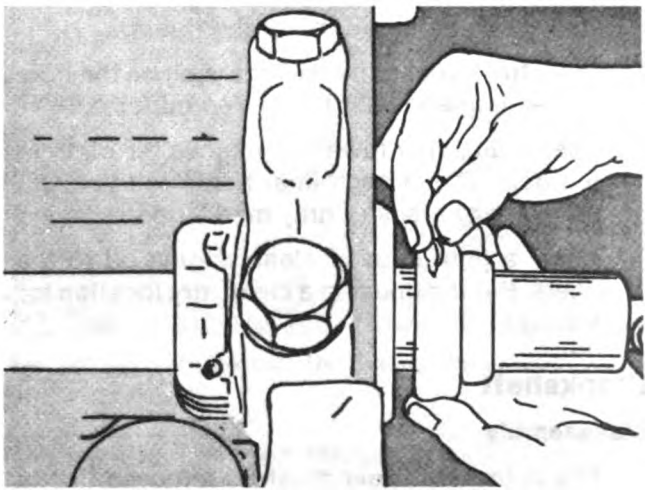

Fig. 1-50. Adjust The Cutting Depth Of The Tool.

Note: The tool must be rotated slowly while cutting in order to prevent the surface from becoming rough.

11. To cut the opposite side of the thrust bearing surface, follow Steps 4 through 9. The finished thickness (thrust bearing thickness) of the rear cap (No. 7) is:

    Minimum 2.496 [63.39 mm]
    Maximum 2.500 [63.50 mm]

Digitized by Google

The Cylinder Liners

Inspection

1. Check for cracks in the cylinder liner. Check carefully under the flange at the bottom of the liner and above the grooves for the O-rings.
2. The liners can be checked for cracks by using the magnetic method or by using dye.
3. Discard a liner that has corrosion or damage that is deeper than 1/16 inch [1.59 mm]. Also discard a liner that has damage under the flange that can not be removed with emery cloth.
4. Measure the bore of the liner with a bore gauge. Discard the liner if the bore is larger than 5.505 inch [139.83 mm]

Cleaning The Cylinder Liner

1. Clean the liners with warm water and soap. Use a bristle brush.
2. Clean the soap from the liners with steam.
3. Use compressed air to dry the liners.
4. Put a thick coat of clean engine oil on the bore of the liner and wait five to ten minutes.
5. Use clean paper towels to remove the oil from the bore. Clean each liner bore until you can not see any black or gray marks on the paper.
6. Apply a light coat of clean engine oil to the liners. Put the liners in a clean, dry location for storage.

Crankshaft

Disassembly

1. The crankshaft gear must be removed if it is damaged or worn.

Note: If the crankshaft gear is in good condition, do not remove the gear.

2. Use the following tools from the Part No. 3375840 Gear Puller Kit to remove the gear:

3375834	Gear Puller Assembly
3375839	Jaw

Inspection

Check the crankshaft for wear, damage and cracks. Measure the journals of the crankshaft with a micrometer. See Table 5.

Table 5: Crankshaft Journal Diameters

Journal	Minimum inch [mm]	Maximum inch [mm]	Worn Limit inch [mm]
Connecting Rod	3.1235 [79.337]	3.125 [79.375]	3.122 [79.298]
Main Bearing	4.4985 [114.262]	4.500 [114.30]	4.4975 [114.237]

Grind the crankshaft journals if they are out-of-round more than 0.002 inch [0.05 mm]. Follow the instructions given in the Crankshaft Inspection And Reconditioning Manual, Bulletin No. 3379092-00.

Clean the Holes in the Crankshaft

1. Remove the pipe plugs. Use a nylon bristle brush and solvent which dries quickly to clean the oil holes. Flush the oil holes with solvent and dry with compressed air.
2. Lubricate the threads of the pipe plugs with clean SAE20W or 30W lubricating oil. Install the plugs and tighten to 60 to 95 in.-lbs. [6.8 to 10.9 N•m].

The Crankshaft Journals and Thrust Flange

1. Carefully inspect the crankshaft journals and the thrust flange at the No. 7 main bearing journal. If the surfaces have damage or scratches, grind the crankshaft. If you grind the crankshaft, you will have to install over-size main and connecting rod bearings or, oversize thrust rings.

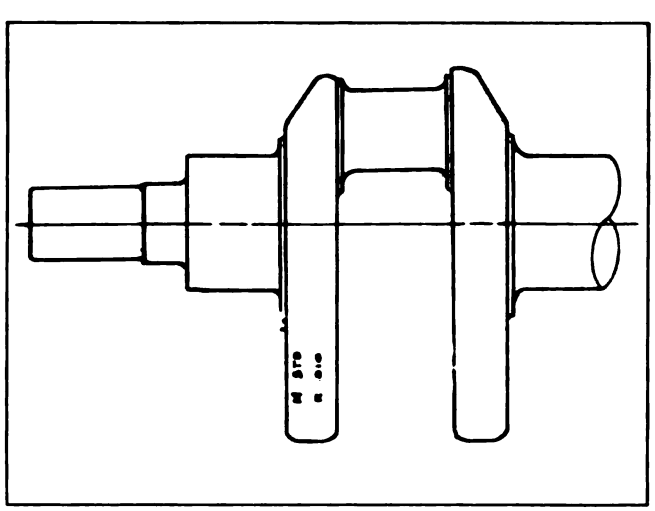

Fig. 1-51 (V50138). Marks To Show The Size Of The Main And Connecting Rod Journals.

Digitized by Google

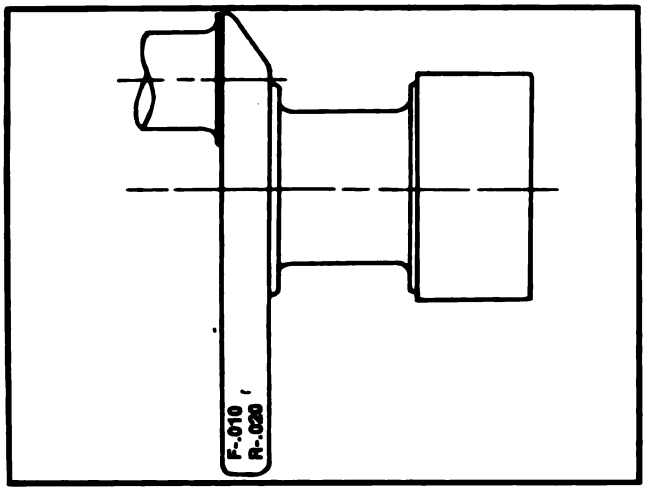

Fig. 1-52. Marks To Show The Size Of The Thrust Surfaces.

2. Put a mark on the crankshaft when you grind it. This will show the correct size for the main and connecting rod bearings. Include on the identification both the thrust ring size and the location of the ring. See Fig. 1-51 and Fig. 1-52.

3. Put a mark for the undersize main and connecting rod journal on the front counterweight. Put a mark for the oversize thrust bearing on the rear counterweight. Fig. 1-52 shows how to mark the counterweight.

Example of an identification mark, Fig. 1-52.

F-.010 indicates Front 0.010 inch [0.25 mm]
R-.020 indicates Rear 0.020 inch [0.51 mm]

Assemble the Crankshaft Gear

Check the Parts Catalog for the correct gear part number.

1. Install the key in the crankshaft.

2. Heat the gear in an oven at 400°F [205°C] for at least one hour.

Note: Be careful when you heat the crankshaft gear. Make sure the heat is even in the oven. Do not let the gear overheat. Overheating will change the hardness of the gear.

3. The timing mark on the gear must be toward you as you install the gear.

4. Align the keyway of the gear with the key in the crankshaft.

5. Use a piece of tubing and a hammer to push the gear onto the crankshaft. Do not damage the gear.

Bearings

The bearing shells for the main bearings and the connecting rod have two halves. One half has the oil holes for lubrication. Thrust rings are used at the rear main bearing.

Inspection

1. Measure the shells with a micrometer that has a ball point, Fig. 1-53. Discard the shells that are worn more than 0.001 inch [0.025 mm], or have scratches or other damage. See Table 6 for the thickness of the standard shell.

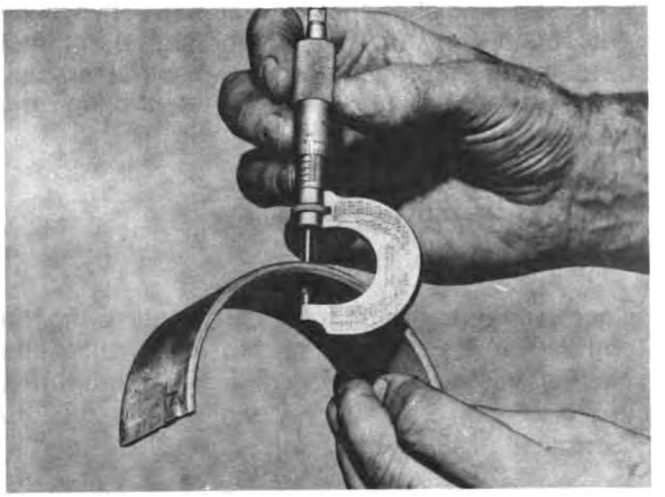

Fig. 1-53 (N10127). Measure The Bearing Shell.

Table 6: Bearing Shell Thickness — Inch [mm]

Bearing Journal	New Dimension Minimum	Maximum	Worn Limit
Main Bearing	0.1230 [3.124]	0.1238 [3.145]	0.1215 [3.086]
Connecting Rod*	0.0724 [1.839]	0.0729 [1.852]	0.0710 [1.803]
Connecting Rod**	0.0942 [2.393]	0.947 [2.405]	0.093 [2.393]

*Connecting Rod with bolts and nuts.
**Connecting Rod with capscrews.

Note: Bearing shells are available for crankshafts which are 0.010, 0.020, 0.030 or 0.040 inch undersize.

Digitized by Google

2. The main and connecting rod bearings must have oil clearance between the shell and the crankshaft, see Table 7. The clearance must not change more than 0.002 inch [0.05] from one bearing to the next bearing.

Table 7: Bearing Clearance — Inch [mm]

Bearing Journal	New Dimension Minimum	Maximum	Worn Limit
Main Bearing	0.0015 [0.038]	0.0050 [0.127]	0.0070 [0.178]
Connecting Rod	0.0015 [0.038]	0.0045 [0.114]	0.0070 [0.178]

Note: Never remove any metal from the bearing shells to change the oil clearance. After operation, a bearing shell that is fitted correctly will be gray. Light areas on the shell indicate that metal is touching metal without enough oil clearance. Dark areas on the shell indicate that the clearance is too large.

Crankshaft Thrust Bearings

Inspection

Check the thrust rings for wear by measuring the end movement of the crankshaft (crankshaft end clearance). With a new crankshaft and thrust bearings, the end clearance must be 0.007 to 0.017 inch [0.18 to 0.43 mm].

Replacement

If the clearance exceeds the usable limit of 0.022 inch [0.56 mm], install oversize thrust bearings. Measure the thrust bearing in several locations to make sure the upper and lower halves of the thrust bearings are the same thickness. Put a mark on the rear counterweight of the crankshaft to show the thickness of the thrust bearing.

The Vibration Damper

All Cummins engines must use vibration dampers. Two types of dampers are used: the rubber element vibration damper or the viscous vibration damper. Clean the damper before inspection. You cannot repair a vibration damper. If a damper is defective, discard it and install a new one.

The Rubber Element Vibration Damper

Cleaning

Clean the damper with detergent. Do not use a strong detergent.

Inspection

1. Check the metal parts of the damper for cracks or other damage. Check the rubber element for cracks or other damage.
2. Check the index lines (3, Fig. 1-54) on the damper hub (1) and the inertia member (2). If the lines are more than 1/16 inch [1.59 mm] out of alignment, discard the damper.

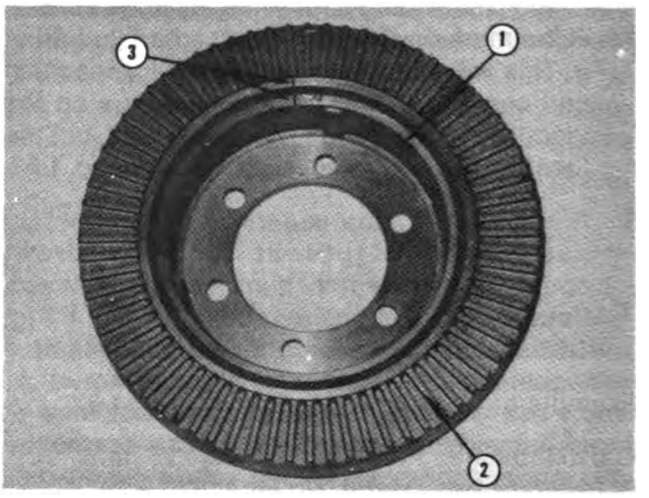

Fig. 1-54 (N10146). Alignment Marks On The Vibration Damper.

3. Check the inertia member and the hub for alignment. The flat face of the member and the mounting face of the hub must be aligned within 0.025 inch [0.63 mm].
4. The outside diameter of the inertia member must have a common center within 0.030 inch [0.76 mm] with the pilot bore of the hub.

The Viscous Vibration Damper

Cleaning

Clean the damper with a solvent cleaner.

Inspection

1. Apply a spray of Spotcheck Developer, Type SKD-NF, or equivalent on the damper. Put the

Digitized by Google

damper in an oven heated to 200 °F [93 °C]. Let the damper reach the temperature inside the oven, and then remove it.

2. Inspect the damper for oil leaks. Discard the damper if any leaks are seen.

3. Remove the paint from four areas on each side of the damper, Fig. 1-55. Use these areas to take measurements of the thickness of the damper.

Caution: Do not use coarse emery cloth or a sharp tool to remove the paint. Use cleaning solvent and 240 grit emery cloth.

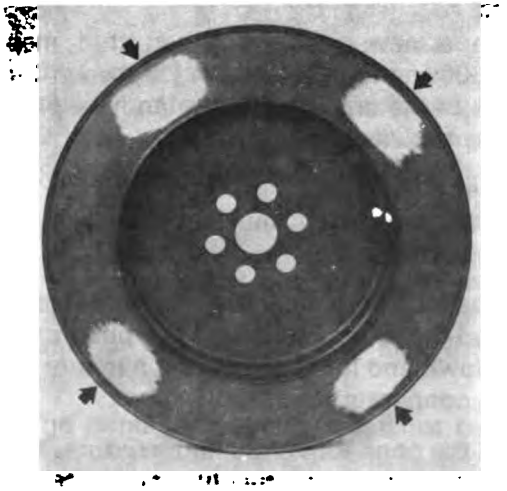

Fig. 1-55 (N101116). Remove Paint From The Damper.

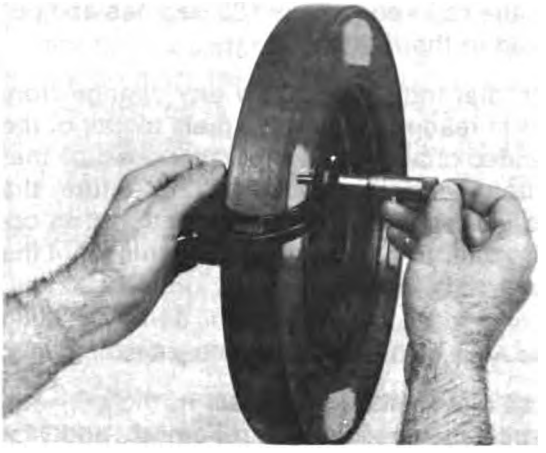

Fig. 1-56 (N101117). Measure The Thickness Of The Damper.

4. Use a micrometer to measure the thickness at each of the four areas. Measure approximately 0.125 inch [3.18 mm] from the outside diameter of the damper, Fig. 1-56.

5. Replace the damper if the difference in the measurements between any two of the four areas is more than 0.010 inch [0.25 mm].

The Mounting Flange for the Vibration Damper

Inspection

1. Check the threads in the capscrew holes.

2. The outside diameter of the pilot flange must have a common center within 0.004 inch [0.10 mm] with the inside diameter of the pilot bore, Fig. 1-57. The movement of the flange face measured at a radius of 2.75 inch [69.8 mm] must not be more than 0.003 inch [0.08 mm]. Take the measurements after the vibration damper is installed on the engine. When you measure the flange, keep the crankshaft at the far end of the end movement.

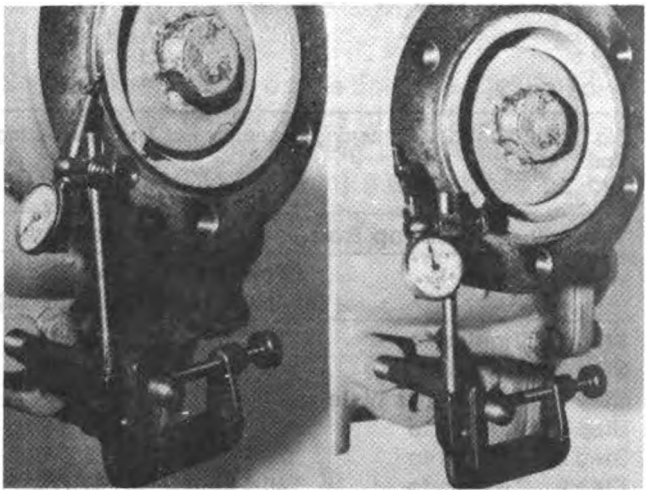

Fig. 1-57 (N114156). Check The Movement Of The Mounting Flange.

Replacement

Replace the flange if the movement is more than 0.003 inch [69.8 mm].

The Connecting Rod

Inspection

1. Use the magnetic method (Magnaglo) to find cracks in the connecting rods, caps, capscrews

Digitized by Google

or bolts. Discard the part if cracks are found. Make sure you keep the connecting rod and the cap together.

Note: Some joints in the forging will show as cracks. Make sure to check the rod for the location of these joints. These lines are not an indication of cracks. Do not discard parts with these marks.

2. Assemble the cap to the rod and tighten the capscrews or nuts to the correct torque in the correct sequence. Fig. 1-58 shows the correct sequence.

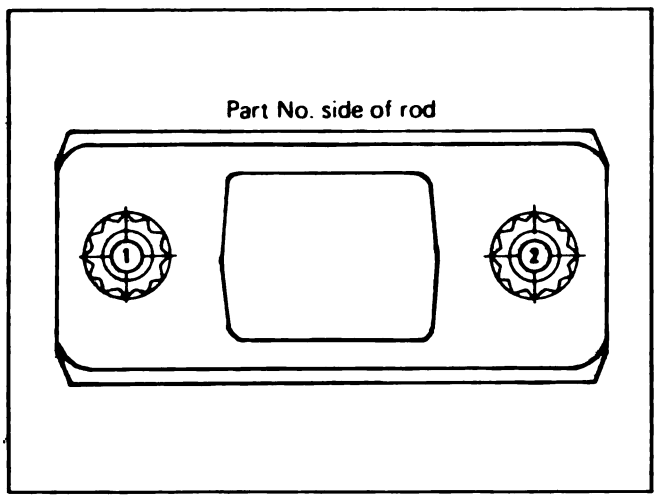

Fig. 1-58 (N114222). Tightening Sequence For The Connecting Rod.

Table 8: Connecting Rod Torque Specifications

		Minimum Ft.-lb. [N•m]	Maximum Ft.-lb. [N•m]
Step 1.	Tighten to	70 [95]	75 [102]
Step 2.	Tighten to	140 [190]	150 [203]
Step 3.	Loosen completely		
Step 4.	Tighten to	25 [34]	30 [41]
Step 5.	Tighten to	70 [95]	75 [102]
Step 6.	Tighten to	140 [190]	150 [203]

3. Measure the crankshaft bore with a dial bore gauge.
   a. The connecting rods with bolts and nuts must have a crankshaft bore with a diameter between 3.2722 to 3.2732 inch [83.114 to 83.139 mm].
   b. The connecting rods with capscrews must have a crankshaft bore with a diameter between 3.3157 to 3.3167 inch [84.219 to 84.244 mm].
4. Measure the inside diameter of the piston pin bushing. Use a dial bore gauge. The inside diameter must measure between 2.0010 to 2.0015 inch [50.825 to 50.838 mm].
5. If the crankshaft bore or bushing is not correct, the connecting rod must be machined to the correct size.
6. Discard all connecting rods that have cuts, scratches or other damage that is deeper than 1/32 inch [0.80 mm] on the I-beam.

Calibrating the ST-561 Checking Fixture

Use the Part No. ST-561 checking fixture and ST-563 locating mandrel to check the connecting rod alignment.

1. Use a new connecting rod that measures 12.000 inches [304.80 mm] between the centers of the crankshaft bore and the piston pin bore to calibrate the fixture.
2. Select the correct piston pin mandrel from the locating mandrel and install it in the piston pin bore.
3. Install the arbor in the crankshaft bore. Expand the arbor. Make sure the pin on the arbor is down and locked in position in the center of the connecting rod.
4. Put the connecting rod in the fixture. Move the dial holder so that the contact points of the indicators are touching the mandrel in the piston pin bore. Tighten the bracket to hold the indicators. Set the indicator dials at zero.
5. Remove the connecting rod from the fixture. Turn the rod horizontally 180 degrees and put the rod in the fixture.
6. If the dial indicators show any change from the first reading, adjust the dials to half of the indicated change. Then, in either position that the connecting rod is put in the fixture, the dials will show the same reading, but in opposite directions on the dials. At this point the fixture is calibrated.

Check the Alignment of the Connecting Rod

1. Install the mandrel and arbor in the connecting rod to be checked. Follow steps 2 and 3 for calibrating the fixture.

Digitized by Google

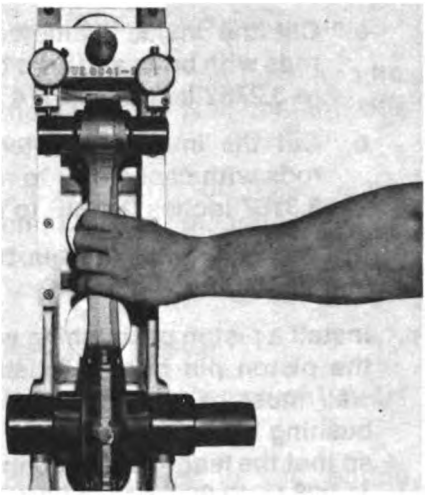

Fig. 1-59 (V40138). Check The Alignment Of The Bores.

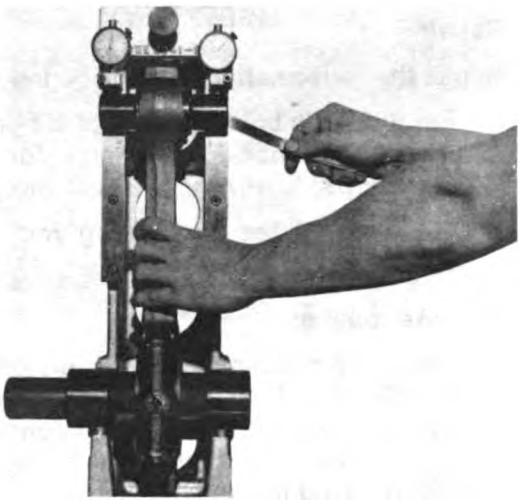

Fig. 1-60 (V40139). Measure The Amount Of Twist In The Connecting Rod.

2. Put the connecting rod in the fixture, Fig. 1-59. Take readings for the length (compared to the length of the connecting rod used to calibrate the fixture) and for the alignment of the bores (the difference in the readings from one indicator to the other).
   a. The length must not be longer than the master rod used to calibrate the fixture and not more than 0.002 inch [0.05 mm] shorter.
   b. The bend (alignment) must not be more than 0.010 inch [0.25 mm] without the bushing installed or 0.004 inch [0.10 mm] with the bushing installed.
3. Measure the twist of the connecting rod with a feeler gauge. Put the feeler gauge between the mandrel and the dial indicator holding plate, Fig. 1-60. When the connecting rod does not have a piston pin bushing, the twist must not be more than 0.020 inch [0.51 mm]. When the bushing is installed and machined to the correct size, the twist must not be more than 0.010 inch [0.25 mm].

The Connecting Rod Bolts and Bolt Holes

The connecting rod bolt or capscrew can be distorted when it has been tightened to an excessive torque.

1. Check the smallest diameter of the bolt or capscrew. If the diameter is less than shown in Table 1-1, discard the bolt or capscrew.
2. Discard any bolts and nuts that have damaged threads.
3. Measure the pilot bore in the bolt holes. If the pilot bore in the rod is larger than 0.6249 inch [15.872 mm] discard the rod. If the pilot bore in the cap is larger than 0.6252 inch [15.880 mm] discard the cap.
4. Check the radius on the bolt pad. The bolt pad must have a fillet radius of 0.045 to 0.055 inch [1.14 to 1.40 mm]. See Fig. 1-61. A maximum of 0.0625 inch [1.587 mm] material can be cut from the pad to repair the radius. Remove any sharp edges from the pad.

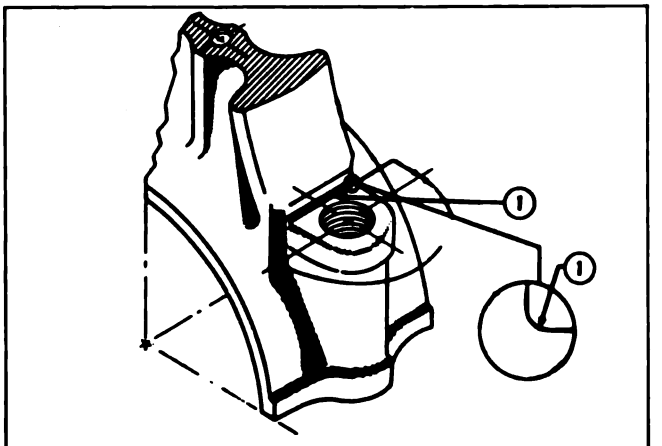

1. Bolt head fillet radius

Fig. 1-61 (N40114A). The Fillet Radius On The Bolt Pad.

Digitized by Google

Repair

Repair the crankshaft bore of the connecting rod if:

1. For rods with bolts and nuts, the bore is larger than 3.2732 inch [83.139 mm]; for rods with capscrews, 3.3167 inch [84.244 mm].
2. The face of the connecting rod or cap is damaged.

To make repairs:

1. Remove the bushing for the piston pin. Use the ST-1242 bushing driver to remove the bushing. Install the cap on the connecting rod and tighten the capscrews or nuts to the torque listed in Table 8.
2. Use the ST-561 checking fixture to measure the length of the rod. Discard the rod if the length is 11.991 inches [304.57 mm] or less.

Note: A maximum of 0.009 inch [0.23 mm] can be removed from the rod and cap. Equal amounts of material must be removed from the rod and the cap. The length of the rod must be 12.000 inches [304.80 mm] before you can remove a maximum of 0.009 inch [0.23 mm] from the rod and cap. If the maximum of 0.009 inch [0.23 mm] had to be removed, the rod must measure 11.991 inches [304.57 mm] in length after machining.

   a. The alignment of the bolt or capscrew bores in the rod and cap must not change. Hold the rod and cap in a clamp that holds the rod in alignment when cutting material from the surfaces.

   b. Use lapping compound to polish the surfaces that were machined. Apply a blue compound to the surfaces and check them against a flat plate. The area outside the centerline of the bolt bores (The area farthest from the crankshaft bore) must show 100 percent contact. The remaining area must show a minimum of 75 percent contact.

3. Install the cap on the rod and tighten the capscrews or nuts to the torque listed in Table 8.
4. Cut the crankshaft bore with the 3375115 Boring Machine or an equivalent boring machine that has a precision fixture to keep the piston pin bore and crankshaft bore in alignment. The surface of the bore must be smooth within 75 micro-inches.

   a. Cut the inside diameter of the bore for rods with bolts and nuts to measure 3.2722 to 3.2732 inches [83.114 to 83.139 mm].

   b. Cut the inside diameter of the bore for rods with capscrews to measure 3.3157 to 3.3167 inches [84.219 to 83.139 mm].

5. Put the connecting rod in the ST-561 fixture and check the alignment.
6. Install a piston pin bushing with a thick wall in the piston pin bore. A bushing with a thick wall must be used so that you can cut the bushing bore off center. Cut the bushing bore so that the length of the connecting rod will be 11.998 to 12.000 inches [304.75 to 304.80 mm].

Install the Piston Pin Bushing

Use the ST-1242 Bushing Driver to remove the piston pin bushing, Fig. 1-62.

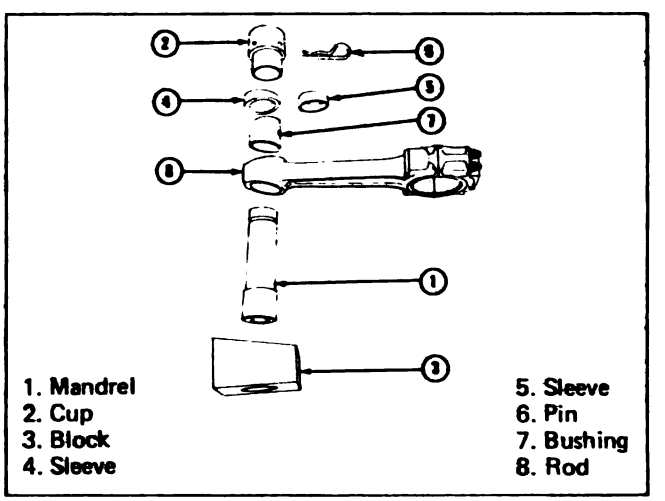

Fig. 1-62 (N10158). The ST-1242 Bushing Driver.

To install the bushing, use the bushing driver.

1. Put the bushing (7, Fig. 1-62) on the mandrel (1). Put the sleeve (4) and then the cup (2) on the mandrel. Fasten the cup on the mandrel with the locking pin (6).
2. Put the connecting rod on the block (3) and hold it in a horizontal position.
3. Insert the mandrel and components as listed in Step 1 into the bore of the connecting rod.
4. Align the sleeve (4) with the middle of the boss on the connecting rod.

Digitized by Google

Note: Make sure the oil holes are in alignment.

5. Use an arbor press to push the bushing into the bore until the sleeve (4) is in contact with the connecting rod.
6. Check the alignment of the oil holes. Make sure an 1/8 inch [3.17 mm] diameter rod can move freely through the connecting rod and bushing.

Cut the Bore in the Piston Pin Bushing

1. Fill the oil holes with soap to prevent metal particles from entering the holes.
2. Install the connecting rod in the boring machine.

Note: To put the connecting rod in the correct position to cut the bore in the bushing, use only the two horizontal blades of the lower mandrel on the machine.

3. The instructions for the boring machine are included with the mahchine.
4. Cut the bushing to 2.0010 to 2.0015 inches [50.825 to 50.838 mm] inside diameter. Remove the rod from the boring machine and check the bore with a dial bore gauge.
5. Remove all sharp edges.
6. Remove any metal particles and the soap from the oil holes. Wash the bores and holes with mineral spirits and dry with compressed air.
7. Use the ST-561 Checking Fixture to check all the dimensions.

Note: All connecting rods used in an engine must be the same part number. Never use a cap from a different part number connecting rod.

Piston Rings

Inspection

Check new piston rings in the cylinder liner in which they are to be installed. Make sure the ends of the ring have the correct gap.

1. Put each ring in the cylinder liner. Use the top part of the piston to position the ring correctly in the liner.
2. Measure the ring gap with a feeler gauge, Fig. 1-63. The ring gap must be within the limit given in Table 9.

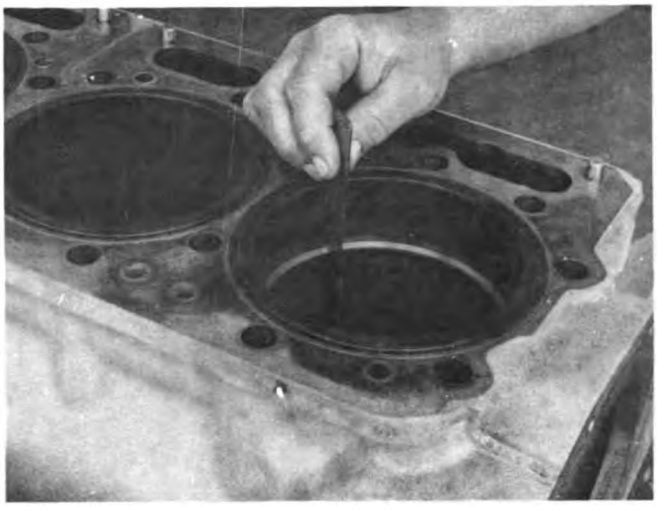

Fig. 1-63 (V40135). Check The Gap Of The Piston Ring.

Table 9: Piston Ring Gap in New Cylinder Liner — Inch [mm]

Piston Ring Part Number	Minimum	Maximum
147670 (Top Ring)	0.023 [0.58]	0.033 [0.84]
218025 (Top Ring)*	0.017 [0.43]	0.027 [0.68]
3012331 (Top Ring)**	0.017 [0.43]	0.027 [0.68]
132280 (Intermediate Ring)***	0.019 [0.48]	0.029 [0.74]
214730 (Intermediate Ring)	0.019 [0.48]	0.029 [0.74]
216383 (Intermediate Ring)*	0.020 [0.51]	0.030 [0.76]
3012332 (Intermediate Ring)	0.019 [0.48]	0.029 [0.74]
218732 (Oil Ring)	0.010 [0.25]	0.025 [0.84]

*NTC 475 Only
**Big Cam II Only
***NTE Engine Only

3. Never use a file or abrasive material to cut chrome rings. Never use chrome rings inside a chrome cylinder liner.
4. Check the parts catalog to make sure you have the correct piston and piston rings.

Pistons

Inspection

1. Use the ST-560 Ring Groove Gauge to check the top and second grooves for the rings.

Digitized by Google

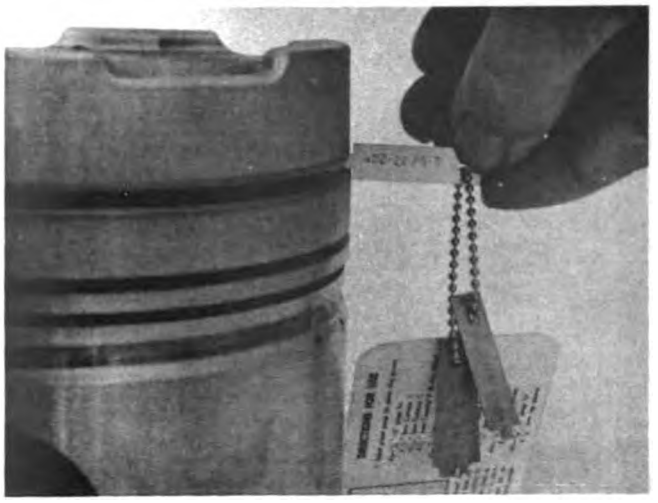

Fig. 1-64 (N10142). Check For Wear In The Ring Groove.

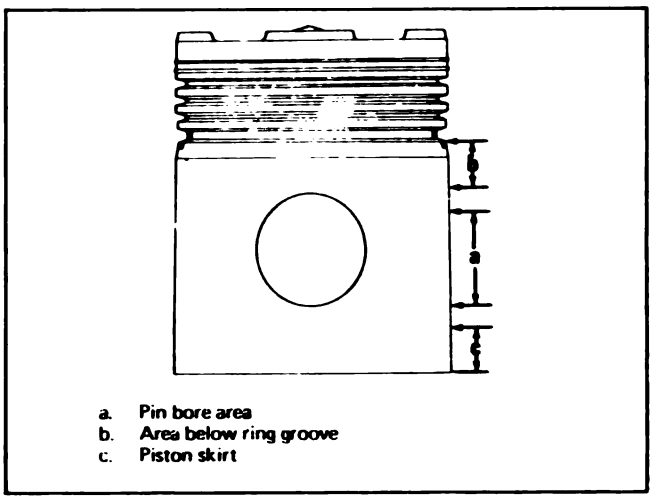

Fig. 1-65 (N20171). Check Points For The Outside Diameter Of The Piston.

Make sure the ring grooves are clean. The widest part (shoulder) of the tool must not come in contact with the piston, Fig. 1-64. If the shoulder touches the piston, the ring groove is worn too deep and the piston must be discarded.

2. If you do not have the ST-560 Gauge, you can check the ring groove by using a section of a new ring and a feeler gauge.
   a. Hold the ring in the groove and install a 0.006 inch [0.15 mm] feeler gauge.
   b. If the feeler gauge enters the groove easily there is too much wear. Discard the piston.
3. Measure the outside diameter of the piston with a micrometer. Take the measurements at right angles to the piston pin bore. Take the measurement when the piston temperature is 70° to 90°F [21° to 32°C].
   a. Measure the area A, Fig. 1-65, for pistons that are barrel-ground.
   b. Measure the area B, 1.0 inch [25.4 mm] below the ring groove, and area C, 1.0 inch [25.4 mm] above the bottom of the piston for pistons that are straight or tapered.
   c. Discard pistons that measure less than 5.483 inch [39.27 mm] diameter.
4. Check the piston pin bore when the temperature of the piston is at 68°F. The inside diameter of the bore must be 1.9985 to 1.9990 inches [50.762 to 50.775 mm] when measured at 68°F. Add 0.0005 inch [0.013 mm] to the diameter per 10°F, up to 90°F [32°C].
5. Use a micrometer to check the outside diameter of the piston pin. Discard the piston pin if it is more than 0.001 inch [0.03 mm] out-of-round. The outside diameter must be 1.99875 to 1.9990 inches [50.768 to 50.774 mm].
6. Do not increase the size of the inside diameter of the piston pin bore or, use an oversize piston pin.

Assemble the Piston to the Connecting Rod

1. Always use the same part number pistons for each cylinder in the engine.
2. Install a snap ring in the groove of the piston pin bore.
3. Heat the piston for 15 minutes in boiling water or in an oven set at 210°F [98.9°C]. Install the piston pin in the piston and connecting pin bores before the piston pin cools to 70°F [21°C]. The piston pin cannot be installed when the temperature of the piston is 70°F [21°C] or less. Install a snap ring in the groove of the piston pin bore opposite to the one in step 2.

Caution: Never use a hammer to install the piston pin. This can cause distortion in the piston and a piston seizure in the cylinder liner. Make sure the edges of the snap ring are in the groove of the piston pin bore.

Digitized by Google

The Rear Cover

Inspection

Remove the oil seal from the rear cover. Check the rear cover for damage to the oil seal bore. Check the threads in the capscrew holes.

Replacement

Replace the rear cover if it is damaged. Install a thread insert if the threads are damaged.

The Camshaft

Inspection

Use a micrometer to measure the journals. Discard the camshaft if the journals measure less than:

1.996 inches [50.70 mm] — 2 inch camshaft
2.495 inches [63.37 mm] — 2-1/2 inch camshaft

Replacement

Replace the camshaft if it has scratches, cracks or other damage. Use a magnetic inspection method to check for cracks.

Note: Cummins Engine Co., Inc. does not recommend grinding the camshaft lobes.

The Thrust Bearing

Replace the thrust bearing if it is damaged, worn or distorted. Replace the thrust bearing if it is worn thinner than 0.083 inch [2.11 mm].

The Camshaft Gear

Remove the gear if it is cracked, damaged or worn.

1. Use a press to push the camshaft from the gear.
2. Put the camshaft in a press. Put V-blocks under the gear. Make sure the V-blocks support the hub area of the gear.
3. Use the press to push the camshaft from the gear. Remove the key from the camshaft.

Caution: Do not use a heating torch to remove the gear. If you use a heating torch, a new gear must be installed.

4. Remove the pipe plug from the end of the camshaft. Clean the oil passages.

Note: Failure to use the correct pipe plug will cause the oil pressure for the engine to be incorrect. See the parts catalog for the engine that you are working with to find the correct combination of camshaft, camshaft plug and camshaft support.

5. Install the pipe plug in the camshaft. Tighten the pipe plug to 5 to 10 ft.-lbs. [7 to 14 N•m] torque.
6. Put the camshaft gear in an oven heated to 400°F [205°C]. Heat the gear for one hour.
7. Install the key in the camshaft. Remove the gear from the oven and use a press to push the gear on the camshaft.
8. Use a feeler gauge to check the clearance between the camshaft flange and the gear. The clearance must not be more than 0.0015 inch [0.038 mm].
9. Turbocharged and aftercooled engines require a retaining ring for the camshaft gear. Put the retaining ring in an oven heated to 450°F [232°C]. Heat the ring for one hour. Remove the ring from the oven and use a press to push the ring on the camshaft until the ring is against the gear. If a retaining ring is used, make sure you have the correct camshaft support and pipe plug.

Note: Always check the engine timing when a new camshaft or camshaft gear is installed.

The Camshaft Support

Discard the support if it is cracked or damaged or, if the inside diameter is worn larger than 1.757 inch [44.63 mm].

The Gear Cover

Disassembly

Remove and discard the oil seals.

The Front Oil Seal

When the gear cover is mounted to the engine, follow these instructions to remove the oil seal.

1. Use three capscrews already removed from the vibration damper to fasten the Part No. ST-1259 Oil Seal Puller to the crankshaft.

Digitized by Google

2. Lubricate the threads of the Part No. ST-1259-6 screws. Put these screws in the tool. Turn them until the threads of the screw engage the metal casing of the seal.
3. Remove the Part No. ST-1259-6 screws. Install a capscrew in the center of the tool. Turn the screw until the seal is pulled from the gear cover.
4. Inspect the area around the seal for damage. Make sure all metal particles are removed.

Inspection

1. Check the outside diameter of the trunnion for wear.
2. Check the cover for cracks or other damage.

Repair

Replace any worn or damaged gear cover.

Repair the Gear Cover Trunion

If the outside diameter of the gear cover trunnion is worn, install a new bushing.

1. Cut the trunnion (1, Fig. 1-66) to measure 4.747 to 4.750 inches [120.57 to 120.65 mm] outside diameter.

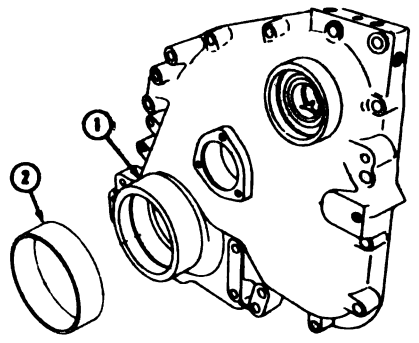

1. Gear Case Trunion
2. Bushing

Fig. 1-65 (N10145). The Gear Cover And Trunnion Bushing.

2. Push the Part No. 68226-1 bushing (2) on the trunnion. Make sure the chamfer on the bushing is toward the gear cover.

The Bushing for the Accessory Drive (except for NTA Engines)

1. Measure the inside diameter of the bushing for the accessory drive. If the inside diameter is larger than 1.571 inches [39.90 mm]. Replace the bushing.
2. Measure the outside diameter of the accessory drive shaft. If the shaft measures less than 1.5665 inches [39.79 mm], an undersize bushing can be installed in the gear cover. The bushing and shaft must have 0.003 inch [0.08 mm] minimum clearance between them. See Table 10 for bushing sizes.
3. Use the ST-598 Mandrel to install the bushing in the gear cover. Make sure the oil holes are in alignment. A 0.156 inch [3.96 mm] diameter rod must be able to move freely through the oil holes.

Table 10: Accessory Drive Bushing — inch [mm]

Part No.	Minimum	Maximum	Worn Limit
132770	1.565 [39.75]	1.569 [39.85]	1.571 [39.90]
132771	1.555 [39.50]	1.559 [39.60]	1.561 [39.65]
132772	1.545 [39.23]	1.549 [39.34]	1.551 [39.40]

The Bushing for the Accessory Drive NTA Engine

1. Measure the inside diameter of the bushing for the accessory drive. If the inside diameter is larger than 1.7585 inches [44.666 mm], replace the bushing.
2. Use the ST-1171 Mandrel to install the bushing in the gear cover. See the parts catalog for the correct part number of the bushing. Make sure the oil holes are in alignment. A 0.156 inch [3.96 mm] diameter rod must be able to move freely through the oil holes.

Digitized by Google

Table 1-1: Cylinder Block Specifications — inch [mm] (Reference Fig. 1-0)

		2 inch Cam Engines			2-1/2 inch Cam Engines *Specifications not listed are the same as 2 inch Cam Engines*		
Ref. No.	**Measurement**	**Worn Limit**	**New Minimum**	**New Maximum**	**Worn Limit**	**New Minimum**	**New Maximum**
1.	**Camshaft Bushing** Inside Diameter	2.0015 [50.838]	1.999 [50.774]	2.0005 [50.813]	2.5023 [63.558]	2.4983 [63.457]	2.4998 [63.495]
	Camshaft Bushing Bore Inside Diameter	2.1305 [54.115]	2.1285 [54.064]	2.1295 [54.089]	2.6265 [66.721]	2.6245 [66.662]	2.6255 [66.688]
2.	**Cylinder Liner Counterbore** Inside Diameter		6.5615 [166.662]	6.5635 [166.713]			
	Depth	0.412 [10.46]	0.350 [8.89]	0.352 [8.94]			
3.	**Liner to Block Clearance** Lower Bore		0.002 [0.05]	0.006 [0.15]			
4.	**Lower Liner Bore** Inside Diameter		6.124 [155.55]	6.126 [155.60]			
5.	**Main Bearing Bore** Inside Diameter	4.7505 [120.663]	4.7485 [120.612]	4.750 [120.650]			
	Block (Ref. Fig. 1-37)						
	Height from Main Bearing Centerline	18.994 [482.45]	19.003 [482.68]	19.007 [482.78]			
	Height from Installed Alignment Bar	16.619 [422.12]	16.628 [422.35]	16.632 [422.45]			
	Cylinder Liner Inside Diameter	5.505 [139.83]	5.4995 [139.687]	5.501 [139.73]			
	Note: New cylinder liners dimensions at 60° to 70°F [16° to 21°C] may be 0.0002 to 0.0006 inch [0.005 to 0.0015 mm] smaller than indicated due to lubrite coating.						
	Protrusion (Installed)		0.003 [0.08]	0.006 [0.15]			
6.	**Crankshaft**						
	Connecting Rod Journal Outside Diameter	3.122 [79.30]	3.1235 [79.337]	3.125 [79.38]			
	Main Bearing Journal Outside Diameter	4.4975 [114.237]	4.4985 [144.262]	4.500 [114.30]			
	Thrust Bearing Surface to Rear Counterweight	3.006 [76.35]	3.001 [76.23]	3.003 [76.28]			
	Main and Rod Journals Out-of-round T.I.R.*	0.002 [0.05]			*T.I.R. — Total Indicated Runout		
	Main and Rod Journal Taper (Length of Journal)	0.0005 [0.013]					
7.	**Main Bearings**** Shell Thickness	0.1215 [3.086]	0.123 [3.12]	0.1238 [3.145]	**Also available in 0.010, 0.020, 0.030 and 0.040 inch undersize.		
	Journal Clearance	0.007 [0.18]	0.0015 [0.038]	0.005 [0.13]			
		(Connecting rods with bolts & nuts)			*(Connecting Rods with capscrews)*		
8.	**Rod Bearings**** Shell Thickness	0.071 [1.80]	0.0724 [1.839]	0.0729 [1.852]	0.093 [2.362]	0.0942 [2.393]	0.0947 [2.405]

Digitized by Google

Table 1-1: Cylinder Block Specifications — inch [mm] (Reference Fig. 1-0) (Cont'd)

		2 Inch Cam Engines			2-1/2 Inch Cam Engines *Specifications not listed are the same as 2 Inch Cam Engines*		
Ref. No.	Measurement	Worn Limit	New Minimum	New Maximum	Worn Limit	New Minimum	New Maximum
9.	**Crankshaft Thrust Ring**	*	0.245	0.247			
	157280 Std. Thickness		[6.22]	[6.27]			
	157281 0.010 O.S.	*	0.255	0.257			
	Thickness [0.25]		[6.48]	[6.53]			
	157282 0.020 O.S.	*	0.265	0.267			
	Thickness [0.51]		[6.73]	[6.78]			
	*Use Crankshaft End Clearance						
10.	**Crankshaft End Clearance**	0.022	0.007	0.017			
	End Clearance (Installed)	[0.56]	[0.18]	[0.43]			
11.	**Connecting Rod**						
	Crankpin Bore		3.2722	3.2732		3.3157	3.3167
	Inside Diameter		[83.114]	[83.139]		[84.219]	[84.244]
	Center to Center Length		11.999	12.000			
			[304.75]	[304.80]			
	Piston Pin Bushing	2.0029	2.0010	2.0015			
	Inside Diameter	[50.856]	[50.825]	[50.838]			
	Connecting Rod						
	Bend	0.010		0.010			
	Without Bushing	[0.25]		[0.25]			
	Bend	0.004		0.004			
	With Bushing	[0.10]		[0.10]			
	Twist	0.020		0.020			
	Without Bushing	[0.51]		[0.51]			
	Twist	0.010		0.010			
	With Bushing	[0.25]		[0.25]			
	Connecting Rod Bolt	0.540	0.541	0.545			
	Minimum Outside Diameter	[13.72]	[13.74]	[13.84]			
	Pilot	0.6242	0.6245	0.6250			
	Outside Diameter	[15.855]	[15.862]	[15.875]			
	Connecting Rod Capscrew	0.583	0.584	0.590			
	Outside Diameter	[14.81]	[14.83]	[14.99]			
	Pilot	0.637	0.638	0.643			
	Outside Diameter	[16.18]	[16.21]	[16.33]			
	Bolt Hole Pilot (2 Bolt Rods)						
	Rod	0.6249	0.6243	0.6248			
		[15.872]	[15.857]	[15.870]			
	Cap	0.6252	0.6246	0.6251			
		[15.880]	[15.865]	[15.878]			
	Dowel and Pilot (2 Capscrew Rod)						
	Dowel Diameter		0.3127				
			[7.943]				
	Rod Dowel Hole		0.3128	0.3133			
			[7.945]	[7.958]			

Digitized by Google

Table 1-1: Cylinder Block Specifications — inch [mm] (Reference Fig. 1-0) (Cont'd.)

Ref. No.	Measurement	2 inch Cam Engines Worn Limit	2 inch Cam Engines New Minimum	2 inch Cam Engines New Maximum	2-1/2 inch Cam Engines *Specifications not listed are the same as 2 inch Cam Engines* Worn Limit	New Minimum	New Maximum
	Dowel Protrusion		0.220 [5.59]	0.250 [6.35]			
	Dowel Press Fit in Cap		0.0001 [0.003]	0.0006 [0.015]			
12.	**Piston**						
	Skirt Diameter at 70°F [21°C]	5.483 [139.27]	5.487 [139.37]	5.488 [139.40]			
	Piston Pin Bore Inside Diameter at 70°F [21°C]	2.0000 [50.800]	1.9985 [50.762]	1.9990 [50.775]			
13.	**Piston Pin**						
	Outside Diameter at 70°F [21°C]	1.9985 [50.762]	1.99875 [50.768]	1.9990 [50.775]			
14.	**Piston Ring**						
	Gap in Ring Travel Area of Liner						
	Part Number	**Minimum**	**Maximum**				
	147670	0.023 [0.58]	0.033 [0.84]				
	218025*	0.017 [0.43]	0.027 [0.68]				
	3012331**	0.017 [0.43]	0.027 [0.68]				
	132880***	0.019 [0.48]	0.029 [0.74]				
	214730	0.019 [0.48]	0.029 [0.74]				
	216383*	0.020 [0.51]	0.030 [0.76]				
	3012332	0.019 [0.48]	0.029 [0.74]				
	218732	0.010 [0.25]	0.025 [0.64]				
	Add 0.003 inch [0.08 mm] ring gap to new maximum limit for each 0.001 inch [0.03 mm] wear in cylinder liner wall.						
	*NTC-475 only						
	**Big Cam II only						
	***NTE Engine only						
15.	**Camshaft Journal** Outside Diameter	1.996 [50.70]	1.997 [50.72]	1.998 [50.75]	2.495 [63.37]	2.496 [63.40]	2.497 [63.42]
	Thrust Bearing Thickness	0.083 [2.11]	0.093 [2.36]	0.098 [2.49]			
	Support Bushing Inside Diameter	1.370 [34.80]	1.3725 [34.862]	1.3755 [34.938]			
	Outboard Bearing Support Inside Diameter	1.757 [44.63]	1.751 [44.48]	1.754 [44.55]			
16.	**Gear Case Cover Accessory Drive Bushing**						
	Part No. 132770 Std. Inside Diameter	1.571 [39.90]	1.565 [39.75]	1.569 [39.85]			
	132771 0.010 [0.25] U.S. Inside Diameter	1.561 [39.65]	1.555 [39.50]	1.559 [39.60]			

Digitized by Google

Table 1-1: Cylinder Block Specifications — Inch [mm] (Reference Fig. 1-0) (Cont'd)

Ref. No.	Measurement	2 Inch Cam Engines Worn Limit	2 Inch Cam Engines New Minimum	2 Inch Cam Engines New Maximum	2-1/2 Inch Cam Engines *Specifications not listed are the same as 2 Inch Cam Engines* Worn Limit	New Minimum	New Maximum
	132772 0.020 [0.51] U.S. Inside Diameter	1.551 [39.40]	1.545 [39.24]	1.549 [39.34]			
	20822 Std. (NTA Series) Inside Diameter	1.7585 [44.666]	1.7525 [44.513]	1.7565 [44.615]			

Torque Specifications — ft.-lbs. [N•m]

Ref. No.	Pipe Plug Size	Minimum	Maximum
17.	1/8	15 [20]	20 [27]
	1/4	30 [41]	35 [47]
	3/8	35 [47]	45 [61]
	1/2	45 [61]	55 [75]
	3/4	60 [81]	70 [95]
	1-1/4	75 [102]	85 [115]
	1-1/2	90 [122]	100 [136]

Ref. No.	Main Bearing Capscrews*	¾ Inch Minimum	¾ Inch Maximum	1 Inch Minimum	1 Inch Maximum
18.	Step 1. Tighten to	80 [108.5]	90 [122]	100 [135.6]	110 [149]
	Step 2. Tighten to	160 [217]	170 [230]	200 [271]	210 [285]
	Step 3. Tighten to	250 [339]	260 [352]	300 [407]	310 [420]
	Step 4. Loosen Completely	All	All	All	All
	Step 5. Tighten to	80 [108.5]	90 [122]	100 [135.6]	110 [149]
	Step 6. Tighten to	160 [217]	170 [230]	200 [271]	210 [285]
	Step 7. Tighten to	250 [339]	260 [352]	300 [407]	310 [420]

Ref. No.	Connecting Rod Nuts or Capscrews	Minimum	Maximum
19.	Step 1. Tighten to	70 [95]	75 [102]
	Step 2. Tighten to	140 [190]	150 [203]
	Step 3. Loosen Completely	All	All
	Step 4. Tighten to	25 [34]	30 [41]
	Step 5. Tighten to	70 [95]	75 [102]
	Step 6. Tighten to	140 [190]	150 [203]

*During 1978, some engines were built with special main bearing caps and ¾ inch main bearing capscrews. Check the serial number and build date of your engine against the list below. *If your engine is one of those listed, the main bearing capscrews must be tightened to 330 ft.-lbs. [447.4 N•m] maximum torque.*

Digitized by Google

Engine Serial No.	Date Built	Engine Serial No.	Date Built	Engine Serial No.	Date Built
10718349 thru 10718373	2-8-78	10721117 thru 10721121	2-16-78	10722677 thru 10722701	2-22-78
10718391 thru 10718394	2-8-78	10721127 thru 10721131	2-16-78	10729153 thru 10729177	3-16-78
10718413 thru 10718420	2-8-78	10721161 thru 10721175	2-16-78	10729428 thru 10729451	3-16-78
10718672 thru 10718674	2-8-78	10721420 thru 10721424	2-16-78	10752302 thru 10752331	6-9-78
10718737 thru 10718746	2-8-78	10721426 thru 10721429	2-17-78	10752414 thru 10752443	6-9-78
10719293 thru 10719309	2-10-78	10721549 thru 10721563	2-17-78	10759241 thru 10759275	7-11-78
10719311 thru 10719319	2-10-78	10721864 thru 10721867	2-20-78	10759566 thru 10759566	7-11-78
10719402	2-10-78	10721963 thru 10721972	2-20-78		
10719405 thru 10719412	2-10-78	10722061 thru 10722070	2-20-78		
10719682 thru 10719691	2-10-78				

Digitized by Google

Digitized by Google

Group 2

The cylinder head group includes the inspection, repair and assembly of: the cylinder head, valves and valve guides, crosshead and crosshead guides, valve seats, injector sleeve and valve springs.

Cylinder Head

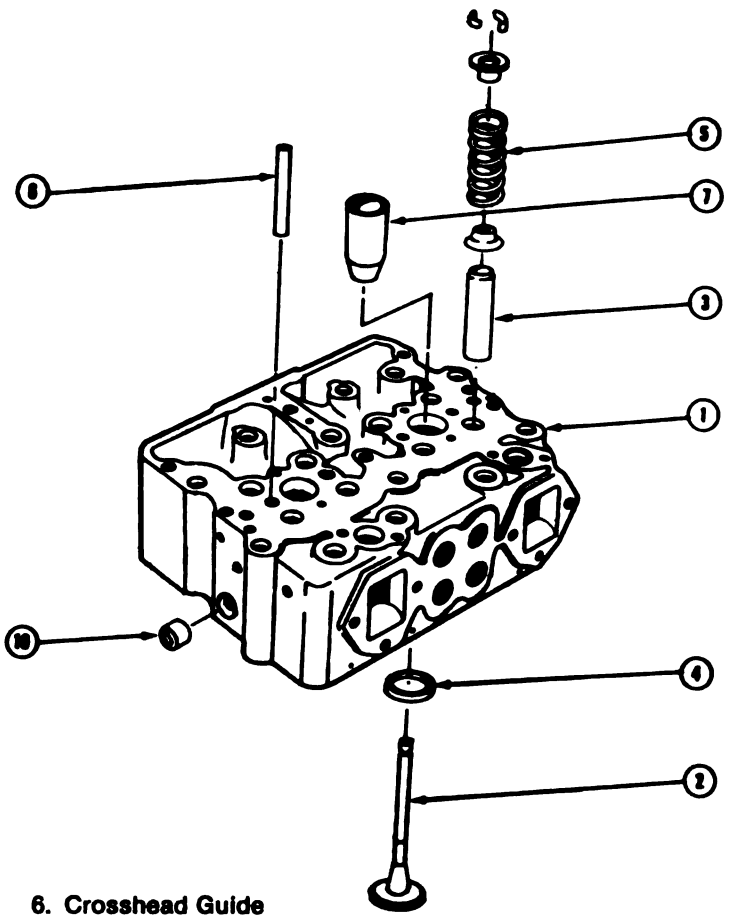

1. Cylinder Head
2. Valve
3. Valve Guide
4. Valve Seat Insert
5. Spring
6. Crosshead Guide
7. Injector Sleeve
8. Valve Spring Retainer
9. Half Collets
10. Cup Plugs

Fig. 2-1, (N10295). Cylinder head — exploded view.

Digitized by Google

Service Tool List

To repair the cylinder head and components according to the instructions given in this group, the following service tools or tools of equal quality are required.

Service Tools (Or Equivalent) Required

Service Tool Number	Tool Name
ST-257	Valve Seat Insert Tool
ST-646	Valve Guide Reamer
ST-662	Valve Seat Insert Cutter Set
ST-663	Valve Guide Arbor Set
ST-684 or 3376256	Valve Facing Machine
ST-685	Valve Seat Grinding Machine
ST-788	Bead Cutting Tool
ST-880	Injector Sleeve Expander
ST-884	Injector Sleeve Cutter
ST-1010	Water Hole Counterboring Tool
ST-1012	Hydrostatic Tester
ST-1013	Hydrostatic Tester Base Plate
ST-1134	Dowel Pin Extractor
ST-1179	Injector Sleeve Holding Tool
3375282	Valve Guide Mandrel
ST-1227	Injector Sleeve Installation Mandrel
ST-1257 A or D	Vacuum Tester
3375190	3/4" Cup Plug Driver
3375191	1" Cup Plug Driver
3375192	1-1/4" Cup Plug Driver
3375933	Valve Head Checking Tool

Desirable (Or Equivalent) Service Tools

Service Tool Number	Tool Name
ST-448	Valve Spring Compressor (Single)
ST-547	Gauge Block
ST-583	Head Holding Fixture
ST-633	Crosshead Guide Mandrel
ST-876	Cleaning Brush
ST-1022	Valve Spring Compressor Stand (Used with multiple compressor plate)
ST-1026	Valve Spring Compressor Plate (Compress 8 springs in one operation)
ST-1122	Staking Tool Driver
ST-1124	Valve Seat Insert Staking Tool
ST-1279	Valve Seat Extractor
ST-1166	Magnetic Crack Detector
ST-1187	Valve Guide Reamer 0.015 inch [0.38 mm] Oversize
ST-1188	Valve Guide Reamer 0.010 inch [0.25 mm] Oversize
ST-1244	Injector Sleeve Puller
ST-1247	Injector Sleeve Puller Impact Wrench Socket
3375155	Injector Protrusion Gauge
3375067	Loctite Cup Plug Sealer
3375182	Valve Spring Tester

Standard Tools — Obtain Locally

0-1 Inch Micrometer
Small Bore Gauge
Vernier Depth Gauge

Cylinder Head

The instructions for the cylinder head are the same for both 2 inch and 2-1/2 inch camshaft engines.

Disassembly

1. Clean the cylinder head assembly with steam. Dry the cylinder head with compressed air.
2. Put the cylinder head in the Part No. ST-583, or an equivalent tool, to hold the cylinder head during disassembly.
3. Use the Part No. ST-1022 Valve Spring Compressor Stand and the Part No. ST-1026 Valve Spring Compressor Plate to compress the valve springs.
   a. Make sure the ST-1022 is fastened to the work bench you will be using.
   b. Align the center of the cylinder head with the plunger of the ST-1022
   c. Position the ST-1026 on the cylinder head so the valve stems will be in the center of the holes in the plate.
   d. Pull down on the handle on the stand. Make sure the valve stems stay in the center of the holes, Fig. 2-2.
   e. Bring the handle all the way down so the locking pin will engage the hole in the plunger. The locking pin holds the plunger against the plate that compresses the springs.
   f. Remove the valve spring collets. You can use a magnet to help remove the collets.
   g. Push down on the handle and disengage the locking pin from the plunger. Raise the plunger from the cylinder head.
   h. Remove the valve springs, valve spring guides and valves from the cylinder head.

Digitized by Google

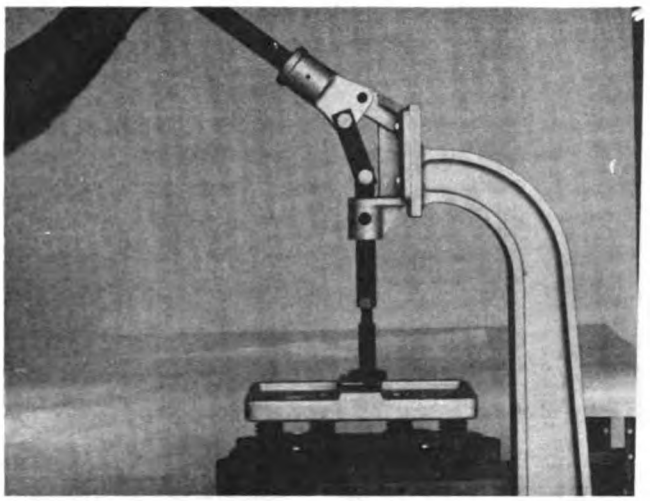

Fig. 2-2. Compress The Valve Springs.

l. The Part No. ST-448 Valve Spring Compressor can be used to compress the valve springs when the cylinder head is installed on the engine.

Caution: Make sure the piston is all the way up in the cylinder before you remove the valve springs in the cylinder head for that cylinder. Replace the valve springs before you move the piston so the valves will not fall into the cylinder.

4. Put each valve, as it is removed, on a stand that has numbers to show the cylinders of the engine.
5. If the engine has oil seals for the intake valve guides, remove the seals. Discard the seals.
6. Engines that are turbocharged have a 1/8 inch pipe plug in the cylinder head vent hole. Remove the pipe plug. Naturally aspirated engines do not have a plug in the vent hole.
7. Remove the pipe plugs from the fuel holes in the number 1 and 3 cylinder head.
8. Remove the pipe plugs from the fuel passages in each end of the cylinder head.

Clean the Cylinder Head

1. Remove the cup plugs and the pipe plugs.
   a. Use a hammer and punch to loosen the cup plug. Hold the punch against the plug, near the outside diameter of the plug, and hit the punch with a hammer to cause one side of the plug to move from its correct location.
   b. Use a screwdriver or pliers to pull the plug from the hole.
2. Put the cylinder head in a tank of cleaning solution heated to near, but not, 212°F [100°C] temperature. You can use the following solvents or an equivalent, Turko or Wyandotte "G". Follow the instructions on the solvent container.
   a. Mix the solvent to help remove the deposits.
   b. Clean the valves, springs and retainers in the solvent.
   c. Use an acid-type cleaner to remove thick deposits.

Warning: The use of acid is dangerous. Always have a tank of strong soda water to control the acid. Wear safety glasses and gloves.

3. Use the Part No. ST-876 Fuel Passage Cleaning Brush to clean the fuel passages in the cylinder head. Wash the passages with solvent to remove deposits.
4. Check the oil passage (1, Fig. 2-3) and make sure it is open.
5. Dry the cylinder head with compressed air. Polish the surface with an orbital sander, Fig. 2-4.
6. To test the fuel passage with air:
   a. Install discarded injectors in the cylinder head.

Fig. 2-3 (N10266). The Oil Passage In The Cylinder Head.

Digitized by Google

Fig. 2-4 (N10290). Polish The Cylinder Head.

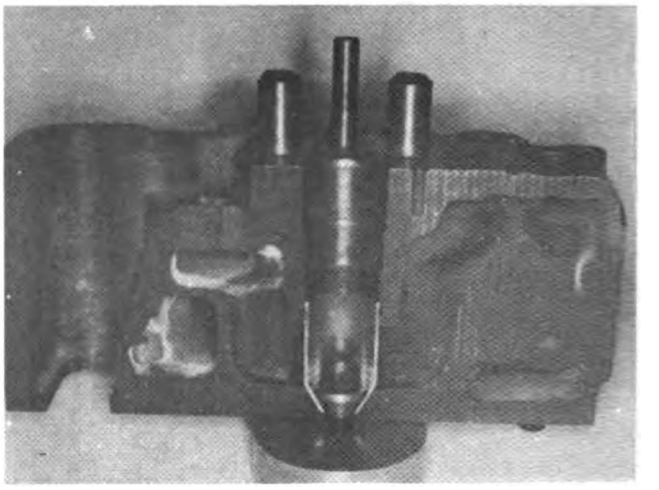

Fig. 2-5 (N10278). Cross-Section Of The ST-1179 Injector Sleeve Holding Tool.

b. Close the fuel outlet and install an air gauge.

c. Install air fittings to the fuel inlet and apply air pressure of 80 to 100 psi [550 to 690 kPa].

d. Close the air inlet valve and check the fuel passage for leaks.

e. Check the air gauge. The pressure shown on the gauge must not decrease for a minimum of 15 seconds. Discard the cylinder head with wear or damage.

Inspection

Air Pressure Test the Cylinder Head

1. Install the Part No. ST-1179 Injector Sleeve Holding Tool, or an injector that has been discarded into the injector sleeve, Fig. 2-5.

2. Tighten the sleeve holding tool to hold the injector sleeve in position. If an injector is used instead of the sleeve holding tool, tighten the hold-down capscrews to 10 to 12 Ft.-Lbs. [14 to 16 N•m] torque.

3. Install the cylinder head in the Part No. ST-1012 Hydrostatic Tester and the Part No. ST-1013 Base Plate, Fig. 2-6

   a. Install the plates on the cylinder head. Engage the locating pins for the plates with the holes in the cylinder head.

   b. Install the clamping assembly over the plates on the cylinder head. Engage the locating pins for the clamping assembly with the holes in the plate. Tighten the screw for the clamping assembly. Make sure the drain valve in the adapter plate is in the closed position.

   c. Use the pins that are supplied with the quadrant to fasten the clamping assembly to the quadrant. Fasten the longer bracket of the quadrant to the bottom of the clamping assembly.

   d. Use a hoist to lift the assembly over a tank filled with water. Connect the air hose to the fitting on either the top or bottom plate. Adjust the air pressure regulator to 30 to 40 psi [207 to 276 kPa].

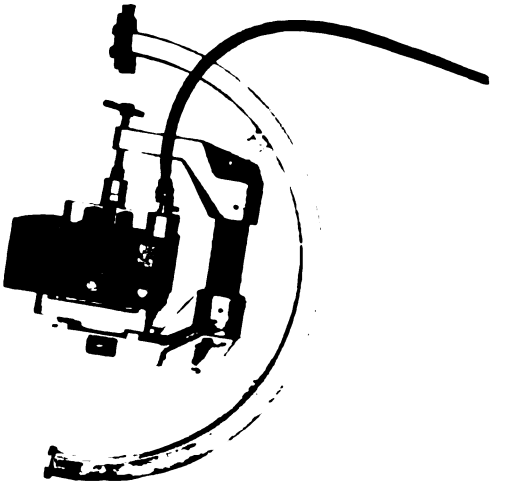

Fig. 2-6 (N10282). The Cylinder Head Installed In The ST-102.

Digitized by Google

e. Lower the assembly into the water until approximately 1/2 inch [12.7 mm] of water is over the cylinder head.

f. Rotate the cylinder head and check for leaks. Be sure to check the upper and lower injector sleeve area for leaks.

g. Lift the assembly from the tank. Remove the cylinder head from the ST-1012 and ST-1013.

Water Pressure Test the Cylinder Head

1. Install a pressure regulator and gauge into a hose that connects to the water and air supply. The water and air supply must have shut-off valves.
2. Install the ST-1179 in the cylinder head as in Steps 1 and 2 for Air Pressure Test.
3. Install the ST-1013 on the cylinder head as in Steps 3a and 3b for Air Pressure Test.
4. Set the pressure at 35 to 85 psi [241 to 586 kPa]. For the best results, have the water temperature at 180° to 200°F [82° to 93°C].
5. Connect the hose to the fitting in the plate. Open the drain valve to remove the air from the cylinder head. Open the valve for the water to fill the cylinder head with water.
6. Close the valves for the water and drain when all the air has been removed from the head.
7. Open the valve for the air pressure.
8. Check the cylinder head for leaks. Be sure the check the areas around the valve seats and the injector sleeve for leaks or cracks. Discard the cylinder head if it has leaks or cracks in the areas of the valve seats or injector sleeves.
9. Close the valve for the air pressure.
10. Open the valve for the water drain to check the water flow through the cylinder head. If the water does not flow freely, remove the plugs and injector sleeves and clean the deposits from the water passages.

Magnetic Method To Find Cracks

Use the Part No. ST-1166 Magnetic Crack Detector to find cracks in the areas around the valves and injectors.

1. Remove the keeper bar from the magnet poles.
2. Put the magnet on the area to be inspected.
3. Use the powder bulb to spray the powder on the area to be inspected. Use compressed air with low pressure to remove excess powder from the area. The remainder of the powder will be in the cracks and will show as a white line, Fig. 2-7.

Fig. 2-7 (N10279). Check The Cylinder Head For Cracks.

To Repair the Cylinder Head Surface

The cylinder head surface must be repaired if it has scratches, damage or is worn so that the surface is not even. Use a milling machine or a grinding machine to cut the surface. Keep the surface at 125 micro-inch.

1. Use the Part No. ST-1279 Valve Seat Extractor to remove all of the valve seats:
   a. Make sure the valve seat is clean.
   b. Apply a coat of grease to the tapered end of the shaft.
   c. Install the shaft in the puller.
   d. Insert the puller in the valve seat. Make sure the shaft is in vertical alignment to the valve seat. Hold the puller with your hand and rotate the T-handle clockwise to tighten the puller against the seat.
   e. Hit the slide hammer against the top nut and let the slide hammer fall against the puller.

Digitized by Google

f. Tighten the T-handle to cause the extractor in the puller to expand under the seat.

g. Hit the slide hammer against the top nut until the seat is removed.

h. Remove the seat from the puller by rotating the T-handle counterclockwise.

i. Repeat the procedure to remove the remaining seats. Be sure to apply grease to the tapered end of the shaft each time you repeat the procedure.

2. Use a vernier depth gauge or micrometer to check the height of the cylinder head. Do not remove more than 0.005 inch [0.13 mm] material with each cut. The cylinder head height must not be less than 4.340 inch [110.24 mm].

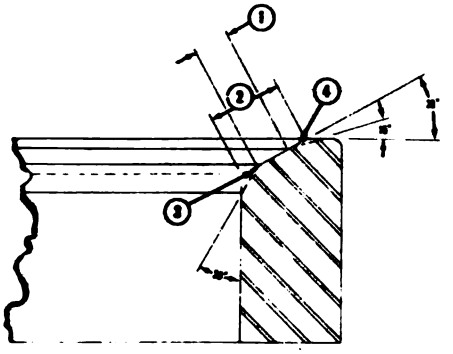

1. Minimum Seat Width 0.063 inch [1.59 mm]
2. Maximum Seat Width 0.125 inch [3.18 mm]

Fig. 2-8 (N10228). Cross-Section Of The Valve Seat Insert.

Inspect the Valve Seats

1. To find loose valve seat inserts, carefully hit the head with a wood or rubber hammer. If the insert is loose enough so that it moves, replace the insert.
2. Check the seat area width (2), Fig. 2-8. If the width is more than 0.125 inch [3.18 mm] and cannot be cut narrower, replace the insert.
3. Use the following tools to cut the counterbore:
   ST-257 Valve Seat Insert Tool Kit
   ST-662 Valve Seat Insert Cutter
   ST-663 Valve Guide Arbor

   a. Install the arbor into the valve stem guide. Put the adapter sleeve from the Tool Kit on to the arbor.

   b. Loosen the clamp screws for the swivel and the gear case. Remove the gear case assembly. Install the base and swivel on to the arbor and adapter sleeve. Make sure the base is flat against the cylinder head.

   c. Use a capscrew to fasten the base to the cylinder head. Do not tighten the capscrew.

   d. Use a seat driver from the Tool Kit. The driver must have the same diameter as the cutter. Install the driver over the arbor and adapter sleeve and through the swivel, Fig. 2-9.

   e. Adjust the position of the base and swivel so the driver will move freely on the arbor. Tighten the capscrew to hold the base to the cylinder head. Tighten the clamp screw for the swivel.

Table 1: Valve Seat Insert Specifications — Inch [mm]

Valve Seat Insert Part No.	Amount of Diameter	Oversize Depth	Insert O.D.	Counterbore I.D.	Insert Thickness
127935	0.005 [0.13]	Standard	2.0075/2.0085 [50.991/51.016]	2.0045/2.0055 [50.914/50.940]	0.278/0.282 [7.06/0.282]
127931	0.010 [0.25]	Standard	2.0125/2.0135 [51.118/51.143]	2.0095/2.0105 [51.041/51.067]	0.278/0.282 [7.06/7.16]
127932	0.020 [0.50]	0.005 [0.13]	2.0225/2.0235 [51.372/51.397]	2.0195/2.0205 [51.295/51.321]	0.283/0.287 [7.19/7.29]
127933	0.030 [0.76]	0.010 [0.25]	2.0325/2.0335 [51.626/51.651]	2.0295/2.0305 [51.549/51.575]	0.288/0.292 [7.32/7.42]
127934	0.040 [1.02]	0.015 [0.38]	2.0425/2.0435 [51.880/51.905]	2.0395/2.0405 [51.803/51.829]	0.293/0.297 [7.44/7.54]

Digitized by Google

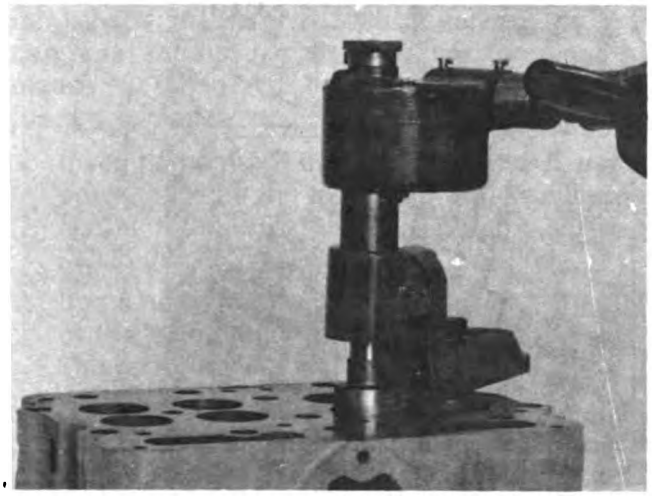

Fig. 2-9. Align The Tool With The Valve Seat.

f. Make sure the alignment is correct, then, remove the driver. Use the T-handle arbor puller and remove the arbor.

g. Apply lubricating oil to the arbor and the hole in the adapter sleeve. Put the cutter in to position over the valve seat. Install the arbor into the valve guide. Install the adapter sleeve on to the arbor.

h. Install the gear case into the swivel. Engage the bottom of the drive shaft with the top of the cutter. Make sure the drive shaft is against the cutter. Tighten the clamp screw to hold the gear case and drive shaft in the swivel.

i. To set the depth of the cutter:
   1) Rotate the feed depth knob counterclockwise four or five complete turns.
   2) Put the new valve seat insert insert under the knob.
   3) Turn the feed depth knob clockwise until it is against the valve seat insert. Turn the knob colunterclockwise until there is 0.006 to 0.010 inch [0.15 to 0.25 mm] clearance between the knob and the insert.

j. Turn the feed engaging knob clockwise to engage the feed mechanism. Attach the chuck of a 1/2 inch electric drill to the drive shank.

k. Start the drill and cut the counterbore until the feed depth knob is against the gear case. Let the cutter turn two or three more revolutions to make sure the counterbore surface is even. If the feed engagement knob disengages before the knob is against the gear case, turn the knob with your hand to complete the cut.

4. Loosen the clamp screw for the gear case. Remove the gear case, arbor and cutter. Be careful and do not move the base or swivel.

5. Remove all metal particles and dirt from the counterbore. Position the valve seat insert in the counterbore. Make sure the chamber on the insert is against the cylinder head.

6. Install the driver adapter and valve seat driver through the swivel. Hit the valve seat driver with a heavy hammer to install the valve seat insert into the counterbore. Make sure the valve seat goes to the bottom of the counterbore. Remove the adapter, driver, base and swivel from the cylinder head.

7. Use the ST-1122 Staking Tool Driver and the ST-1124 Staking Tool to stake the valve seat insert in the cylinder head. If the staking tool and driver is not available, you can use a punch to stake the valve seat insert. Make sure the end of the punch is round.

Caution: Be careful not to damage the cylinder head when you stake the valve seat insert.

Repair

1. Use the following tools to grind the valve seat insert:

   ST-685 Valve Seat Grinder
   ST-663 Valve Guide Arbor

2. Check the width of the valve seat. The valve seat must be a minimum of 0.063 inch [1.59 mm] (1), Fig. 2-10 to a maximum of 0.125 inch [3.18 mm] (2).

3. Grind the valve seat:
   a. Install the valve guide arbor into the valve guide. Turn the arbor to make sure it is installed correctly.
   b. Install the eccentrimeter gauge on the arbor. Check the alignment of the valve seat with the valve guide. The valve seat must not be out of alignment more than 0.002 inch [0.05 mm] per 360 degrees. Remove the gauge from the arbor.

Digitized by Google

c. Install the grinder wheel on to the drive unit. Make sure the grinder wheel is the correct size and has the correct grinding angle.

d. Install the grinder unit on to the arbor. Be careful and do not let the grinder wheel hit against the valve seat insert. The grinder wheel must not be against the insert when you start the motor of the drive unit.

e. Hold the drive unit in a vertical position when you grind the insert. Touch the grinder wheel against the insert by using a minimum of force against the insert. Use an up and down movement to grind the insert. Move the grinder 1/2 inch [13.7 mm] in a vertical direction.

f. If the area (2), Fig. 2-10, is wider than 0.125 inch [3.18 mm], use a grinder wheel that has a 15 degree grinding angle to make the width narrower. Do not grind into the chamfer on the valve seat insert.

Caution: Grinder wheels are easily damaged. If you drop a grinder wheel or hit it, check for damage before you grind the insert.

g. Remove the grinder unit from the arbor.

h. Install the eccentrimeter gauge on the arbor. Check the alignment of the valve seat insert.

4. After you grind the valve seats, clean the cylinder head with a cleaning solvent. Make sure that all abrasive material is removed from the inside diameter of the valve guides. Use a 1/2 inch diameter bristle brush to clean the valve guide inside diameter.

The Valve Guides

Inspection

1. Check the inside diameter of the valve guide. Replace the guide if the bore is worn larger than 0.455 inch [11.56 mm].
2. Use a bore gauge (1), Fig. 2-11 to check the bore at four points spaced 90 degrees apart to find if the bore is out-of-round. Check the full length of the bore.
3. Check the valve guides for damage.

Replacement

Remove the worn valve guides. Use the Part No. 3375282 Valve Guide Mandrel to install the new valve guides.

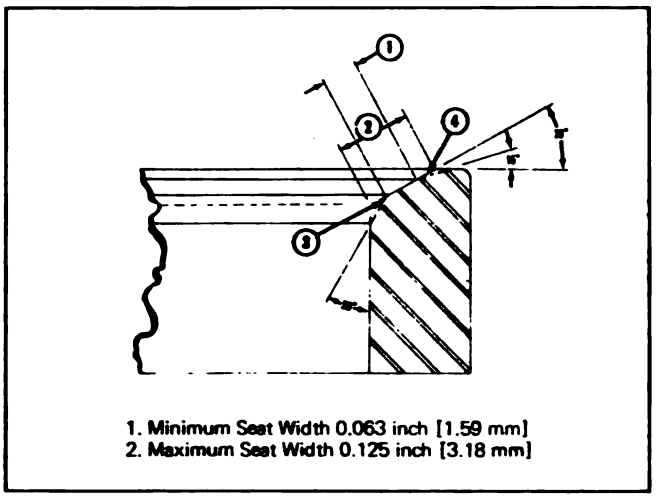

1. Minimum Seat Width 0.063 inch [1.59 mm]
2. Maximum Seat Width 0.125 inch [3.18 mm]

Fig. 2-10 (N10228). Cross-Section Of The Valve Seat Insert.

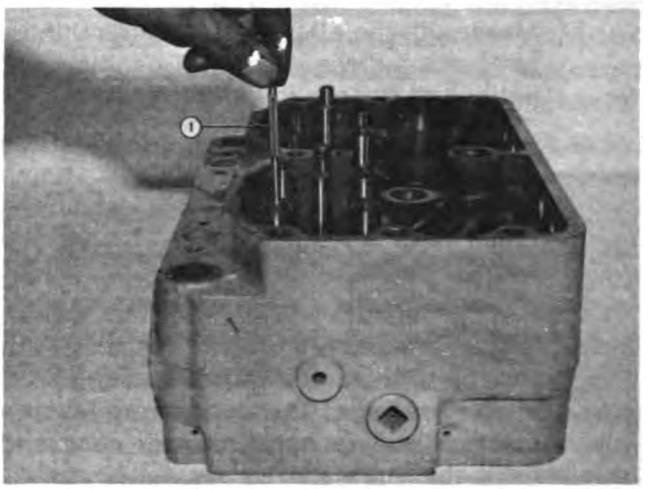

Fig. 2-11 (N10212). Measure The Bore Of The Valve Guide.

2. If the bore for the valve guide is damaged:

   a. Use the Part No. ST-1188 Reamer to cut the bore to measure 0.760 to 0.761 inch [19.30 to 19.33 mm] inside diameter. Make sure the reamer cuts the entire bore. Remove all sharp edges.

   b. Use the 3375282 Mandrel to install the oversize valve guide, Part No. 3006457, into the cylinder head.

NOTE: If the damage to the valve guide bore is not removed by using the ST-1188 Reamer, use the Part No. ST-1187 Reamer to cut the bore to the next largest size. Repeat Steps a and b to cut the

Digitized by Google

bore to measure 0.765 to 0.766 inch [19.43 to 19.46 mm]. Install the Part No. 3006458 valve guide. You can ream the hole in the valve spring guides to measure 0.768 to 0.775 inch [19.51 to 19.63 mm] so the spring guides will fit the oversize valve guides.

3. If you do not have the 3375282 Mandrel, use a press to install the valve guide. Make sure the height of the valve guide is 1.270 to 1.280 inch [32.26 to 32.51 mm] after it is installed.
4. Use a new valve to check the inside diameter of the guide. Insert the valve into the guide. The valve stem must move freely.
5. If the valve does not move freely in the guide, use the Part No. ST-646 Valve Guide Reamer to ream the guide.
6. To ream the valve guide:
   a. Install the reamer in a drill press that has a floating tool holder.
   b. Apply lubricating oil to the reamer while the guide is being reamed.
   c. Do not ream the inside diameter of the guide larger than 0.4532 inch [11.511 mm].

Valves

Inspection

Visual Inspection

1. Clean the valves and polish them with a crocus cloth. If you clean the valves with glass beads, do not let the beads hit the valve stem.
2. Check the valve head for damage. Use the Part No. 3375933 Valve Head Checking Tool to measure the thickness of the valve head rim (A), Fig. 2-12. The rim must measure a minimum of 0.105 inch [2.67 mm].
3. Measure the outside diameter of the valve stem, Fig. 2-13. Discard the valve if the stem is damaged or, measures less than 0.449 inch [11.44 mm].
4. Check the grooves in the valve stem for wear. The valve spring collet must fit tightly in the grooves. Discard the valve if the grooves are worn enough that the collet is loose.

Magnetic Inspection

1. Make sure all grease and deposits are cleaned from the valves. Use solvent or a cleaning machine that uses vapor to remove grease.

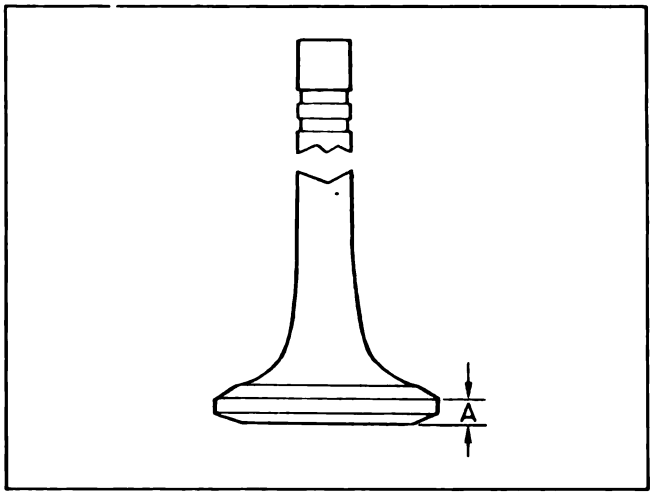

Fig. 2-12 (N10231). The Thickness Of The Valve Head Rim.

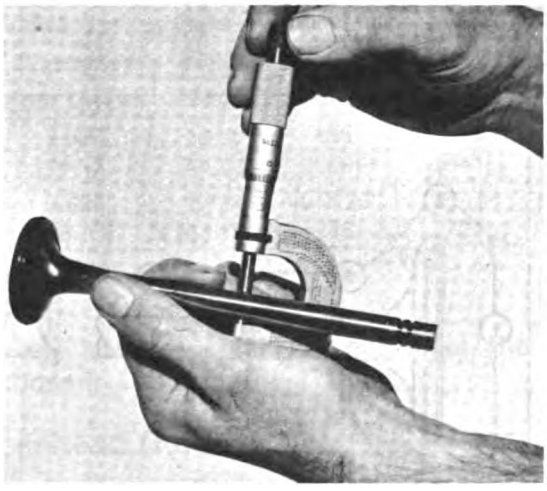

Fig. 2-13 (V40237). Measure The Outside Diameter Of The Valve Stem.

2. Valves that have two different metals can be inspected by a magnetic method. At the point where the metals are welded, there will be a magnetic leakage. The leakage will show as a wide pattern of magnetic particles. Magnetize the valves in a coil at 100 to 200 amperes, then, inspect with residual magnagio. A crack at, or near, the weld will show as a bright line.
3. Valves with only one type of metal must be magnetized and inspected in two directions. Magnetize the valves in a coil at 100 to 300 amperes, then, inspect with residual magnagio. This will cause any defects to show around the circumference of the valve. Magnetize the valves again with a headshot at

Digitized by Google

500 to 700 amperes, then, inspect with residual magnagio. This will cause any defects to show along the length of the valve.

4. The magnetic indications must be as follows:
   a. For area (1), Fig. 2-14 no indication longer than 1/2 inch [12.70 mm]. Also, no more than 5 indications, or, indications spaced closer than 1/8 inch [3.18 mm].
   b. The remaining areas (2, 3, 4 and 5) must not have any magnetic indication or visible indication.

Note: "Visible" means that after you remove the magnetic particle suspension, you can still see an indication while looking through a 3 power magnifying glass.

5. Remove the magnetism from the acceptable valves.

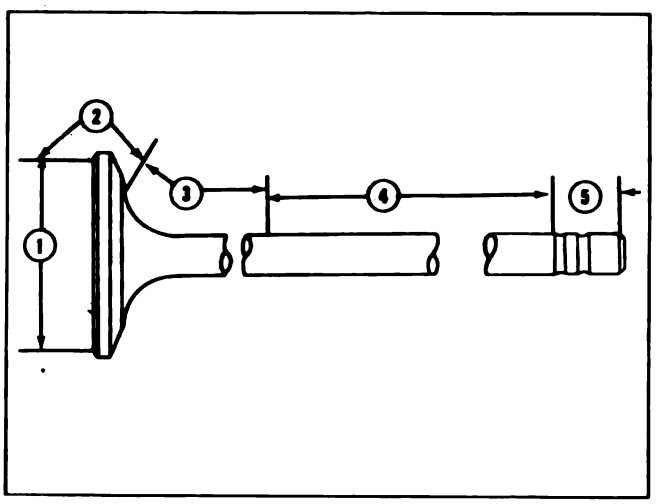

Fig. 2-14 (N10269). Areas Of Magnetic Indication.

Repair

Use the 3376256 or ST-684 Valve Facing Machine to grind the face of the valve.

1. Check the setting on the facing machine by using a new valve and an indicator gauge.
   a. Put the valve in the chuck of the machine. Tighten the chuck on the guide area of the valve stem.
   b. Position the tip of the indicator against the valve face.
   c. Turn the valve. Put a mark on the valve face where the indicator shows the highest reading.
   d. Remove the valve from the chuck. Turn the valve 180 degrees from the original position in the chuck. Put the valve in the chuck and tighten the chuck.
   e. Repeat Steps (b) and (c). If the highest indicator reading is the same and in the same location of the face when the valve is positioned as in Steps (a) and (d), the valve is distorted. If the highest readings are at different locations on the valve face in Steps (a) and (d), the chuck is not in alignment. The indicator must not show more than 0.001 inch [0.02 mm] difference around the circumference of the valve face.
2. Use the valve facing machine to grind the valve face. Make sure the coolant will spray on the valve head, not on the grinding wheel. Grind the valve face to an angle exactly 30 degrees from the horizontal position of the valve.
3. Check the thickness of the valve head rim, Fig. 2-12, to be sure that the rim thickness is not less than 0.124 inch [3.15 mm]. Do not repair any valve with cracks or other damage or any valve whose rim thickness is less than 0.124 inch [3.15 mm].
4. Make sure the valve face has the correct contact against the valve seat. Put marks on the valve face as shown in Fig. 2-15. Install the

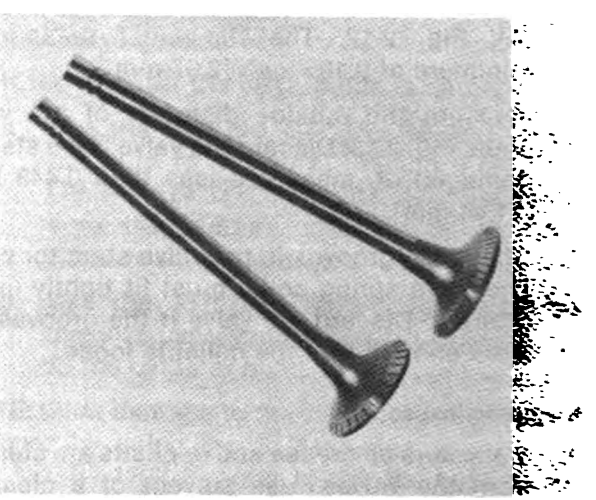

Fig. 2-15 (N20217). Put Marks On The Valve Face.

Digitized by Google

valve in the valve guide. Hold the valve against the valve seat and rotate the valve at least 10 degrees. The correct contact against the seat will cause the marks on the valve face to be broken. If the marks are not broken, check the adjustment of the facing machine and the condition of the grinding wheel.

5. Valves and valve seats that are correctly machined do not require the use of lapping compound to make an air-tight seal. If the Valve Seating Test shows leakage, you can use a small amount of lapping compound on the valve and seat to make an air-tight seal.

6. The correct conditions of the valve and valve seat are:

   a. No marks or scratches on the valve face or valve seat.

   b. No marks or scratches in the valve guide.

   c. The angle of the valve face must be exactly 30 degrees.

   d. Valve guide to valve stem clearance must be a minimum of 0.0022 inch [0.056 mm].

Replacement

Replace any valves which have any cracks or damage or which do not have a rim thickness of at least 0.124 inch [3.15 mm].

The Valve Springs

Inspection

Weak valve springs can cause wear and damage to the valve and valve seat. Weak springs can also change the valve timing and cause the valve to hit the top of the piston.

1. Use the Part No. 3375182 valve spring tester to test the valve spring, Fig. 2-16. Compress the spring to the "working length" given in Table 2. Check the amount of force required to compress the spring, if not within the limits given in Table 2, discard the spring.

2. Use spacers under the valve spring when the valve and valve seat have had a total of 0.030 inch [0.76 mm] material removed. Do not use more than two, Part No. 68803-A Spacers under a valve spring.

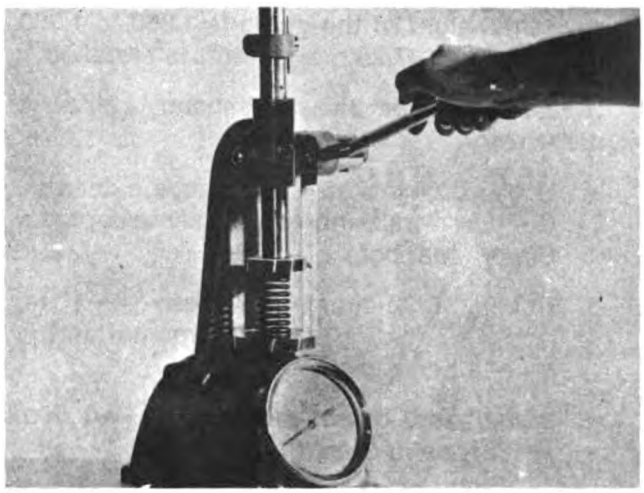

Fig. 2-16 (V10214). Test The Valve Spring.

Table 2: Valve Spring Data — inch [mm] lb. [N]

		Approximate Working Force To Compress		
Part No.	Free Length	Length	Minimum	Maximum
178869	2.920 [74.17]	1.765 [44.83]	155 [689]	189 [841]
211999	2.685 [68.20]	1.724 [43.79]	147.25 [655]	162.75 [724]

Replacement

Replace any springs which do not meet the specifications in Table 2.

The Crosshead Guides

Inspection

1. Use micrometers to measure the outside diameter of the crosshead guide. The diameter must not be worn smaller than 0.432 inch [10.97 mm].

2. Make sure the guide is straight. The guide must be at a right angle to the surface of the cylinder head. Replace any guide that is not straight.

To Replace Crosshead Guides

1. Use the ST-1134 Dowel Puller to remove the worn crosshead guides.

2. Use the ST-633 Crosshead Guide Spacer to install the crosshead guide.

3. If you do not have the guide spacer, use a press to install the crosshead guide. Make

Digitized by Google

sure the height of the guide is 1.860 to 1.880 inch [47.24 to 47.75 mm] after it is installed.

4. If the bore for the crosshead guide is damaged:
   a. Use a 29/64 inch drill to cut the guide bore. Cut the oversize bore to the same depth as the original bore.
   b. Use a 15/32 reamer to ream the bore. Apply lubricating oil to the reamer as the bore is being reamed.
   c. Install the crosshead guide, Part No. 161527, as in Step 2.

Crossheads

Inspection

1. Use a magnetic method to check the crossheads for cracks.
2. Check the inside diameter of the bore, Fig. 2-17. Replace the crosshead if the bore is worn larger than 0.440 inch [11.18 mm].
3. Use a bore gauge to check the bore at four points spaced 90 degress apart to find if the bore is out-of-round.
4. Inspect the rocker lever contact surface (1), Fig. 2-17 and the valve stem contact surface (2) for wear. Check the adjusting screw and threads in the crosshead (4) for wear or damage.

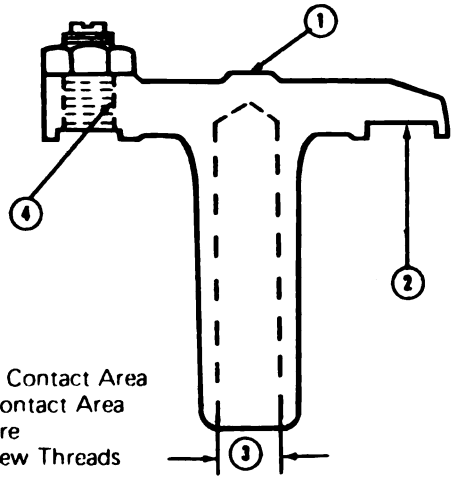

1. Rocker Lever Contact Area
2. Valve Stem Contact Area
3. Crosshead Bore
4. Adjusting Screw Threads

Fig. 2-17 (N10299). Check The Crosshead For Wear.

Replacement

1. Replace the crosshead if the bore is worn larger than 0.440 inch [11.18 mm].
2. Replace the crosshead if the bore is out-of-round or, if there is damage to the threads in the crosshead.

Water Holes

Inspection

The surface of the cylinder head around the water holes must not have any scratches, cracks or corrosion deeper than 0.003 inch [0.08 mm]. There must not be any defect which extends more than 3/32 inch [2.38 mm] from the edge of the water hole.

Repair

To repair the water holes, use the following tools from the Part No. ST-1010 Water Hole Counterboring Tool Kit.

ST-1010-1	Bushing Plate
ST-1010-2	Adapter Screw
ST-1010-3	Stop Collar
ST-1010-5	Counterbore Cutter
ST-1010-8	Drive Adapter
ST-1010-13	Locating Pin
ST-1010-19	Allen Wrench
ST-1010-20	Gauge Block

1. Adjust the depth of the counterbore cutter:
   a. Put the bushing plate on a flat surface with the side of the plate marked "Top" away from the surface.
   b. Install the counterbore cutter in the 5/8 inch [15.8 mm] bushing. Make sure the cutter is against the flat surface.
   c. Slide the stop collar up on the counterbore cutter.
   d. Put the gauge block on top of the bushing plate. Hold the curve at the plate against the cutter.
   e. Slide the stop collar down against the gauge block, Fig. 2-18. Tighten the set-screw in the stop collar.
   f. Remove the cutter and gauge block from the bushing plate.

Digitized by Google

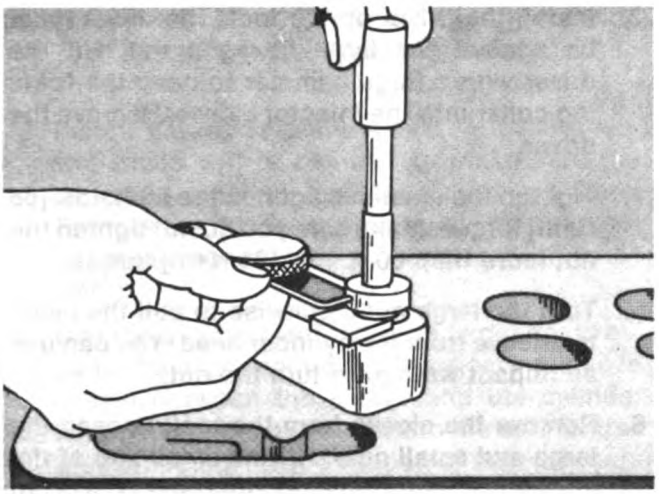

Fig. 2-18. Set The Depth Of The Cutter

2. Put the bushing plate on the cylinder head with the side of the plate marked "Top" away from the cylinder head.
3. Fasten the bushing plate to the cylinder head. Insert the adapter screw through an injector hole and through the bushing plate. Install the adapter knob on the end of the adapter screw.
4. Insert the locating pin through the 5/8 inch bushing and into the water hole to be repaired. Use your hand to tighten the adapter knob to approximately 50 ft.-lbs. [68 N•m], Fig. 2-19.
5. Remove the locating pin.
6. Install the counterbore cutter in the bushing.
7. Install the drive adapter in an electric drill.

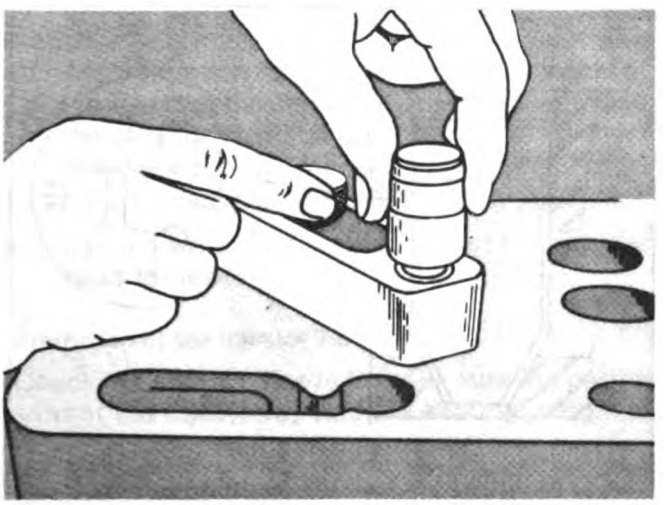

Fig. 2-19. Align The Bushing With The Water Hole.

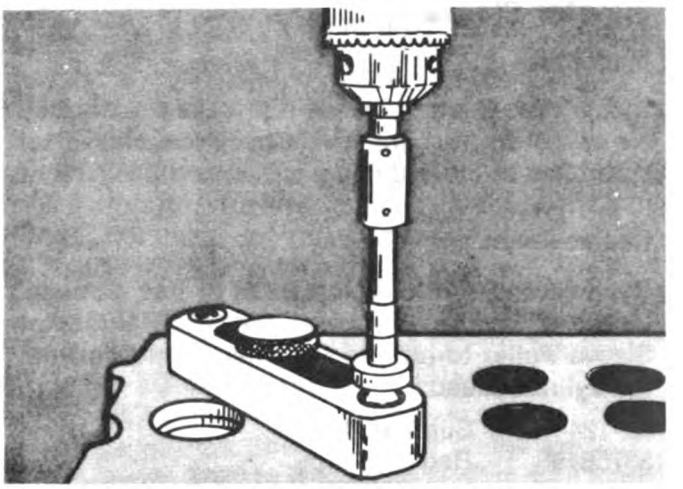

Fig. 2-20. Cut The Water Hole.

8. Engage the drill adapter with the counterbore cutter, Fig. 2-20.
9. Start the drill. Apply minimum downward force while cutting the hole.
10. Remove the counterbore cutter and bushing plate from the cylinder head.
11. To install the Part No. 191078 water passage sleeve:
    a. Make sure the hole is clean and all metal particles and sharp edges are removed.
    b. Slide the sleeve into the end of the bushing driver.
    c. Apply a coat of sealant to the sleeve.
    d. Align the sleeve with the water hole. Hit the bushing driver with a hammer to install the sleeve into the water hole.
    e. Cut the sleeve so that it is even with the surface at the cylinder head. Use a flat, wide mill file to cut the sleeve. Be careful and do not damage the surface of the cylinder head when you cut the sleeve.
12. You can use copper tubing if the 191078 sleeve is not available. The tubing must have a heavy wall and the outside diameter must be 0.002 to 0.005 inch [0.05 to 0.13 mm] larger than the diameter of the hole. The length must be 0.50 inch [12.7 mm] and the inside diameter must be 0.437 inch [11.11 mm].

Digitized by Google

Injector Sleeve

Inspection

Discard the injector sleeve if it leaked during the air or water pressure test. Check the sleeve for scratches or other damage.

Replacement

Replace any sleeve which leaks or has damage. Use the following tools from the ST-1244 Injector Sleeve Puller to remove the injector sleeve from the cylinder head:

ST-1244-1	Support Bridge
3375616	Rod
ST-1244-3	Hexagon Nut (9/16"-12)
ST-1244-4	Hexagon Nut (1"-8)
ST-1244-5	Thrust Washer
3375614	Forming Collar
ST-1244-7	Extractor Tip
ST-1244-8	Driver
3375615	Collar
ST-1247	Socket

Caution: Do not use these tools to remove oversize or damaged injector sleeves.

To Remove the Injector Sleeve

1. Assemble the tools. Do not tighten the hexagon nuts.
2. Install the tool in to the sleeve so that the legs of the bridge are against the surface of the cylinder head, Fig. 2-21
3. Install the driver on the tool. The driver must be against the large hexagon nut. Hit the driver with a large hammer to push the forming collar into the injector sleeve. Remove the driver.
4. Tighten the small hexagon nut to 50 ft.-lbs. [68 N•m] torque. Make sure you do not tighten the nut more than 60 ft.-lbs. [81 N•m] torque.
5. Turn the large nut clockwise to pull the injector sleeve from the cylinder head. You can use an impact wrench to turn the nut.
6. Remove the sleeve from the tool. Loosen the large and small nuts. Hit the small end of the sleeve lightly to loosen it from the tool. Turn the sleeve 120 degrees and slide it from the tool.
7. Make sure the bead in the bottom of the injector bore is smooth. Use the Part No. ST-788 Bead Cutting Tool with the Part No. ST-884-1 and ST-884-6 Holder and Pilot to cut the bead in the bore.

To Install the Injector Sleeve

1. Apply a coat of clean lubricating oil to a new injector sleeve O-ring. Install the O-ring into the groove in the bore for the sleeve, Fig. 2-22.
2. Use the ST-1227 Injector Sleeve Driver to push the sleeve into the bore. Do not hit the driver with a hammer. Remove the driver from the sleeve.

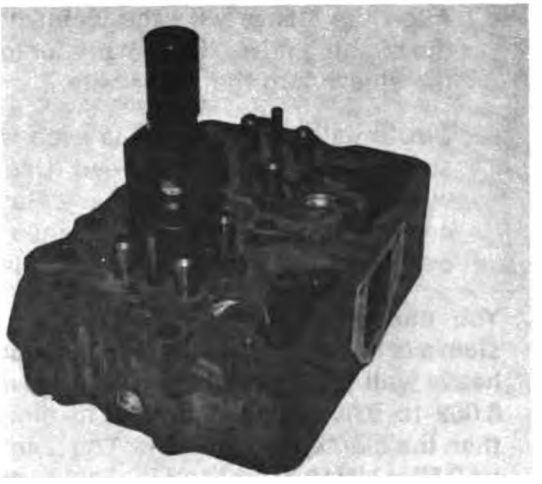

2-21. Install The Tool Into The Cylinder Head.

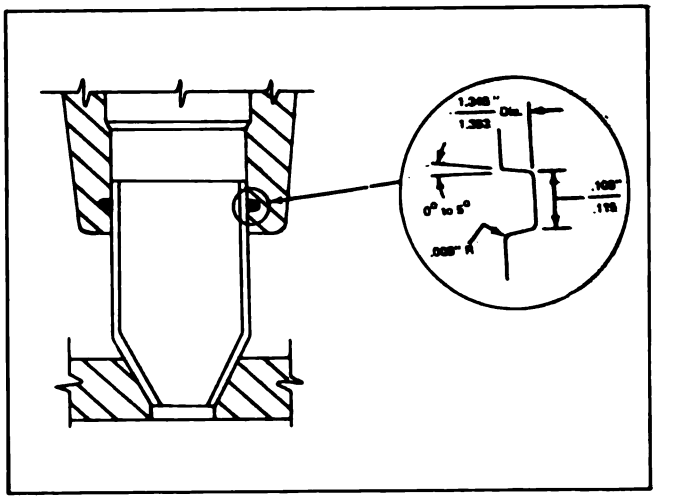

Fig. 2-22 (V40244). The O-Ring Groove In The Cylinder Head.

Digitized by Google

3. Install the ST-1179 Injector Sleeve Holding Tool into the sleeve. Tighten the capscrew to 35 to 40 ft. lbs. [47 to 54 N•m] torque.
4. Install the driver in the sleeve. Hit the driver two times with a hammer to make sure the sleeve is against the bottom of the bore. Remove the driver and tighten the holding tool capscrew again to 35 to 40 ft.-lbs. [47 to 54 N•m].
5. Use the ST-880 Injector Sleeve Expander to expand the upper section of the sleeve to cause a seal between the sleeve and the cylinder head. Install the expander into the sleeve. Use an inch-pound torque wrench to turn the mandrel of the expander. Turn the mandrel until the torque wrench shows 75 in.-lbs. [8.5 N•m] torque.

Caution: Be careful when you expand the sleeve, do not damage the sleeve and O-ring.

6. Remove the expander and the holding tool from the sleeve.
7. Use the ST-884 Injector Seat Cutter to cut the injector seat in the sleeve. Install the injector in the cylinder head, tighten the capscrews to 10 to 12 ft.-lbs. [14 to 16 N•m] torque. Then, use the ST-547 to measure the protrusion of the injector tip to find the amount to cut from the sleeve. The protrusion of the injector tip must be 0.060 to 0.070 inch [1.52 to 1.78 mm]. Remove the injector.
8. Install the ST-884 Cutter and pilot in a drill press. Cut the seat for the injector. Be sure to use enough cutting oil while cutting the seat. The seat must have a smooth surface.
9. Apply Prussian blue compound to the inside of the sleeve at the area of the injector seat. When the injector is installed, the compound must show completely around the injector and must be a minimum width of 0.060 inch [1.52 mm].
10. Use the water test method to test the cylinder head for leaks.

Protrusion of the Injector Tip

Check the injector sleeve to make sure the protrusion of the injector tip and the seating pattern is correct.

1. Apply a light coat of blue compound to the injector cup. Install the injector assembly into the sleeve. Tighten the capscrews to 10 to 12 ft.lbs. [14 to 16 N•m] torque.
2. Remove the injector and check the pattern of the blue compound in the sleeve. The pattern in the sleeve must be a minimum of 0.060 inch [1.52 mm] wide and 0.469 inch [11.91 mm] from the bottom surface of the cylinder head, Fig. 2-23. If the sleeve does not meet those specifications, it must be replaced.
3. Install the injector assembly into the sleeve. Tighten the capscrews to 10 to 12 ft.-lbs. [14 to 16 N•m] torque. Use the Part No. ST-547 Gauge Block to measure the protrusion of the injector tip, Fig. 2-24. The protrusion of the tip must measure 0.060 to 0.070 inch [1.52 to 1.78 mm].

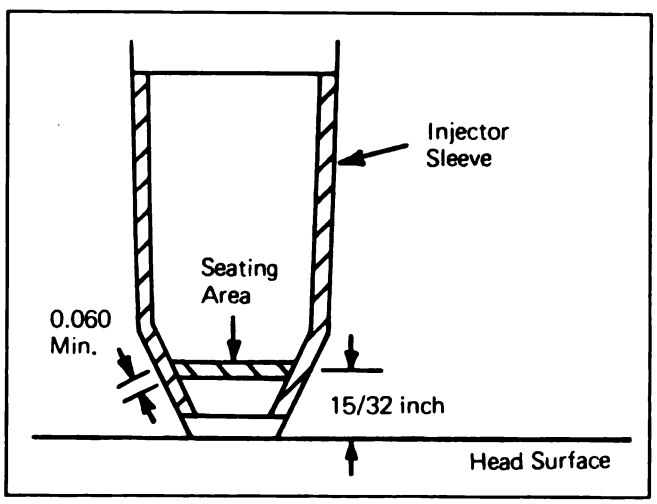

Fig. 2-23 (N10298). Cross-Section Of The Injector Sleeve.

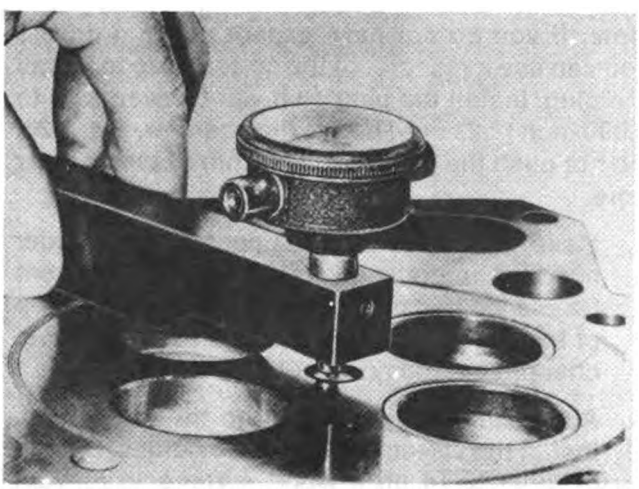

Fig. 2-24 (N10206). Measure The Protrusion Of The Injector Tip.

Digitized by Google

Table 3: Pipe Plug Torque — ft.-lbs. [N•m]

Plug Size Inch	Minimum Torque	Maximum Torque
1/16	3 [4]	6 [8]
1/8	5 [7]	10 [14]
3/8	35 [47]	45 [61]
1/2	60 [81]	70 [95]
3/4	65 [88]	75 [102]
1	135 [182]	145 [197]

Table 4: Cylinder Head Expansion Plug Driver

Driver Part No.	Plug Size — inch
3375190	3/4
3375191	1
3375192	1-1/4

Assembly and Testing

Assembly

1. Install the pipe plugs, fuel inlet and fuel drain fittings into the fuel passages. Make sure the fittings and plugs are installed in the same location as their original location. Apply teflon tape or liquid lead compound to the threads. Tighten the pipe plugs to the torque valve given in Table 3.
2. Apply a coat of 3375068 Expansion Plug Sealant to the outside diameter of the expansion plug. Apply a coat of the sealant to the inside diameter at the water hole.
3. Use the correct expansion plug driver listed in Table 4 to install the expansion plug.

Note: If you do not have expansion plug drivers you can use a mandrel of the correct size to install the plug. Install the plug so it will be even with to 0.090 inch [2.29 mm] below the chamfer, Fig. 2-25. Do not push the plug to the bottom of the counter bore.

4. Make sure the vent hole is open in the cylinder head for naturally aspirated engines. The vent hole is located above the air intake port on top of the cylinder head. Cylinder heads for turbocharged engines do not have vent holes.
5. Apply clean lubricating oil to the valve stem. Install the valves into the valve guides. Put the cylinder head on a wood surface to prevent damage to the surface of the cylinder head.

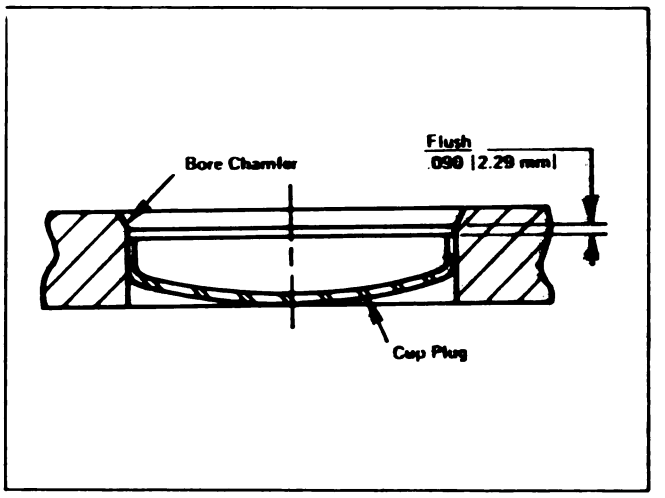

Fig. 2-25 (N102109). Cross-Section Of Cup Plug Installed In The Cylinder Head.

6. Install the lower guides for the valve springs over the valve guides.

Caution: Make sure you use the correct valve spring and valve spring guide. See the Parts Catalog for the correct part numbers.

7. Valve guide seals for the intake valves are not installed on new engines. You can install valve guide seals, but, do not install a seal instead of replacing the valve guide.
8. Install the valve spring, spring seat and, if required, spring spacer. Install the upper valve spring guide. Compress the valve springs and install the valve spring collets. Always use new valve spring collets.
9. Cylinder heads that have two valve springs for each exhaust valve require:
   a. A heavy-duty spring guide at the top of the springs.
   b. Two spring wear plates at the bottom of the springs.
   c. See the Parts Catalog for the correct part numbers.

The Valve Seating Test

Use the ST-1257 Valve Vacuum Tester to check the seal between the valve and the valve seat.

Caution: Never vacuum test a cylinder head with the injectors installed. Installing the injectors can cause the valves to be out of alignment and will

Digitized by Google

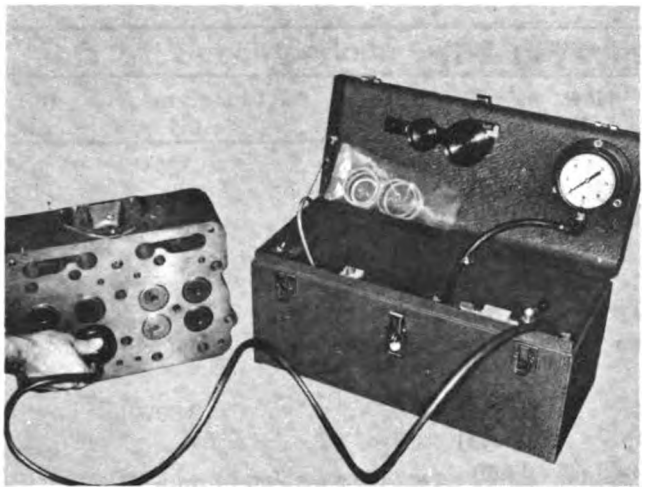

Fig. 2-26 (N10297). Vacuum Test The Valves.

show leakage during the vacuum test. When the cylinder head is installed to the cylinder block installing the injectors will not cause the valves to be out of alignment.

1. Make sure the valve and valve seats ar clean and dry.
2. Put the vacuum cup over the valve, Fig. 2-26. The O-ring in the cup must make a seal on the cylinder head around the valve.
3. Turn the shutoff valve to the open position. Hold down on the push button to operate the vacuum pump.
4. Operate the vacuum pump until the vacuum gauge indicates between 18 to 25 inch-hg [457 to 635 mm hg].
5. Turn the shutoff valve to the closed position. Release the push button to stop the vacuum pump.
6. Check the time for the gauge to indicate a decrease in vacuum.
   a. Start timing when the gauge indicates "18".
   b. Stop timing when the gauge indicates "8". The total amount of time must not be less than 10 seconds.
7. If the total time for the vacuum to decrease from "18" to "8" is less than 10 seconds:
   a. Make sure the valves and valve seats are clean.
   b. Lightly hit the valve stem with a soft hammer.
   c. Check the connections on the vacuum tester for leaks. Start the pump and hold the cup against a smooth surface. The gauge must not show a decrease in vacuum, a decrease indicates a loose or leaking connection.
   d. Check for leaks between the valve seat insert and counterbore. Apply a coat of grease to the outside diameter of the insert to make a grease seal between the insert and counterbore. Vacuum test and inspect the grease seal. A break in the seal indicates a leak between the insert and counterbore. Stake the valve seat insert and vacuum test for leaks.
   e. Grind the valve face and/or the valve seat insert.
8. Always clean the cylinder head after any grinding or cutting operation.

Digitized by Google

Table 2-1: Specifications — Inch [mm] (Reference Fig. 2-1)

Ref. No.	Worn Measurement	New Limit	New Minimum	New Maximum
1.	**Cylinder Head**			
	Height	4.340 [110.24]	4.370 [111.00]	4.380 [111.25]
2.	**Valve, Stem**			
	Outside Diameter	0.449 [11.41]	0.450 [11.43]	0.451 [11.46]
	Face Angle		30 degree	30 degree
3.	**Valve Guide**			
	Inside Diameter	0.455 [11.56]	0.4525 [11.494]	0.4532 [11.511]
	Assembled Height		1.270 [32.26]	1.280 [32.51]
4.	**Valve Seat Insert***			
	Outside Diameter		2.0025 [50.864]	2.0035 [50.889]
	Cylinder Head			
	Inside Diameter		1.9995 [50.787]	2.0005 [50.813]
	Insert Height		0.278 [7.06]	0.282 [7.16]
	Run Out in 360 Degrees	0.002 [0.05]		
	Refaced Seat Width		0.063 [1.59]	0.125 [3.18]
5.	**Valve Spring****			
	Assembled Height			2.250 [57.15]
6.	**Crosshead Guide**			
	Outside Diameter	0.432 [10.97]	0.433 [11.00]	0.4335 [11.011]
	Assembled Height		1.860 [47.24]	1.880 [47.75]
	Crosshead Bore	0.440 [11.18]	0.434 [11.02]	0.436 [11.07]
7.	**Injector Sleeve**			
	Tip Protrusion		0.060 [1.52]	0.070 [1.78]

*See Ref. No. 8 for oversize valve seat inserts.
**See Ref. No. 9 for valve spring data.

Digitized by Google

Table 2-1: Specifications — inch [mm] (Reference Fig. 2-1) (Cont'd.)

Ref. No.	Valve Seat Insert Part No.	Oversize Diameter	Oversize Depth	Insert O.D.	Cylinder Head I.D.	Insert Thickness
8.	127935	0.005 [0.13]	Std.	2.0075/2.0085 [50.991/51.016]	2.0045/2.0055 [50.914/50.940]	0.278/0.282 [7.06/7.16]
	127931	0.010 [0.25]	Std.	2.0125/2.0135 [51.118/51.143]	2.0095/2.0105 [51.041/51.067]	0.278/0.282 [7.06/7.16]
	127932	0.020 [0.50]	0.005 [0.13]	2.0225/2.0235 [51.372/51.397]	2.0195/2.0205 [51.295/51.321]	0.283/0.287 [7.19/7.29]
	127933	0.030 [0.76]	0.010 [0.25]	2.0325/2.0335 [51.626/51.651]	2.0295/2.0305 [51.549/51.575]	0.288/0.292 [7.32/7.42]
	127934	0.040 [1.02]	0.015 [0.38]	2.0425/2.0435 [51.880/51.905]	2.0395/2.0405 [51.803/51.829]	0.293/0.297 [7.44/7.54]

Be sure to measure the insert before machining the head or installing the insert.

Ref. No.	Valve Spring Part No.	Approximate Free Length inch [mm]	No. Coils	Wire Diameter inch [mm]	Length inch [mm]	Required Load for Length: Lb. [N] Worn Limit	Lb. [N] New Minimum	Lb. [N] New Maximum
9.	178869	2.920 [74.17]	9.5	0.177 [4.50]	1.765 [44.83]	150 [667]	155 [689]	189 [841]
	211999	2.685 [68.20]	9	0.177 [4.50]	1.724 [43.79]	143 [636]	147.25 [655]	162.75 [724]

Cylinder Head Pipe Plug Torque — Ft.-Lbs. [N•m]

Ref. No.	Plug Size	Minimum	Maximum
10.	1/16 inch	3 [4]	6 [8]
	1/8 inch	5 [7]	10 [14]
	3/8 inch	35 [47]	45 [61]
	1/2 inch	60 [81]	70 [95]
	3/4 inch	65 [88]	75 [102]
	1 inch	135 [182]	145 [197]

Digitized by Google

Digitized by Google

Group 3

This section includes the inspection, repair and assembly of: rocker levers, rocker lever shafts, rocker lever covers, rocker lever housings and crankcase breather.

Rocker Levers

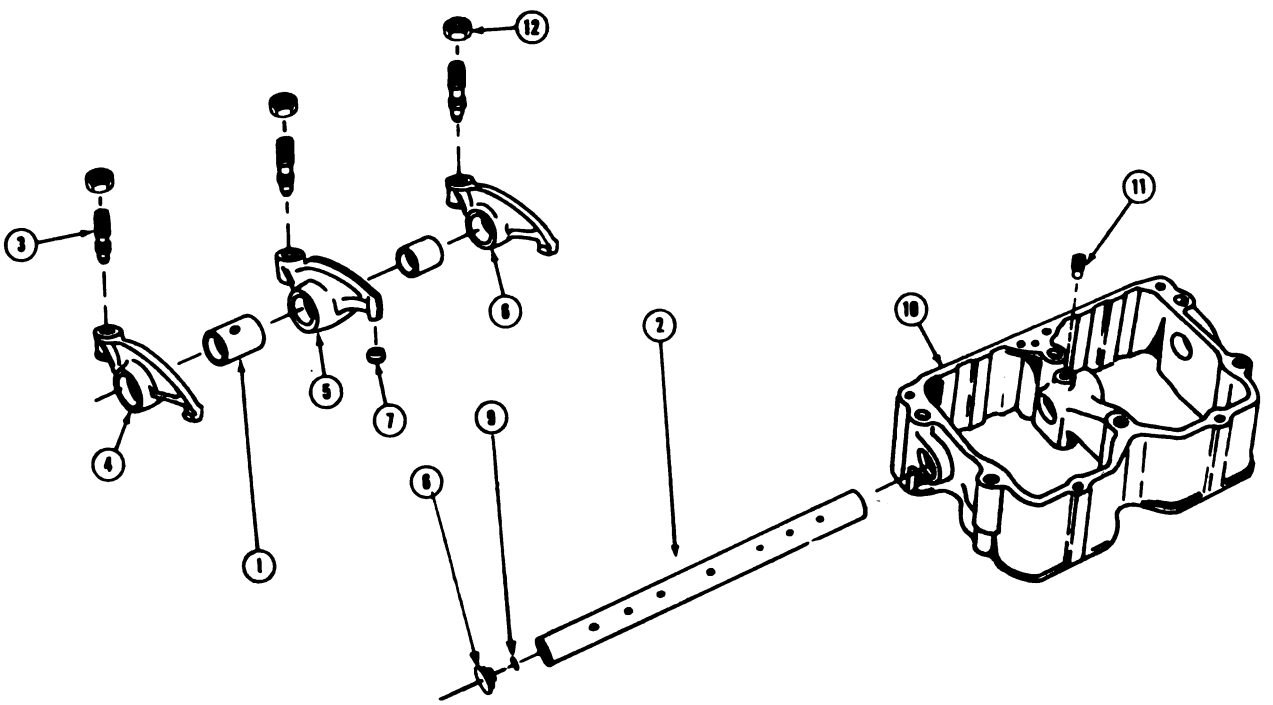

1. Bushing
2. Shaft
3. Adjusting Screw
4. Intake Lever
5. Injector Lever
6. Exhaust Lever
7. Injector Lever Socket
8. Housing and Shaft Plug
9. Shaft Plug O-Ring
10. Rocker Lever Housing
11. Shaft Setscrew
12. Adjusting Screw Locknut

Fig. 3-1, (N10329). Rocker Lever Shaft And Housing.

Digitized by Google

Service Tool List

Service Tools (Or Equivalent) Required	
Service Tool Number	**Tool Name**
ST-257	Valve Seat Insert Tool
ST-691	Mandrel and Block
ST-863	Mandrel
ST-1053	Driver
ST-1182	Alignment Tool (80 degree tilt engine)

Standard Tools — Obtain Locally	
	Small Bore Gauge
	Micrometers (1 to 2 inch)
	Radius Gauge (1/4 inch [6.35 mm])

Rocker Levers and Housing

Disassembly

1. Mark each lever for the position it is in as removed. Remove the adjusting screws and nuts from all the levers.
2. Remove the setscrew or the spray nozzle and jam nut which holds the shaft in the housing (80 degree tilt engine).
3. Use a flat or drift punch to push the shaft through the housing. Be careful and do not damage the bore in the housing.
4. Remove the O-rings from the solid plugs and discard them. The solid plugs can be removed from the shaft by putting the plug in a vise and then moving the shaft. Discard the plugs.

Cleaning

Clean the bore in the shaft with a bottle brush.

Inspection

1. Visually inspect all the capscrew holes for damaged threads. Inspect all the levers, housings and covers for damage.
2. Inspect the opening of the shaft bore for sharp edges or other change. The opening of the bore should have a slight radius. Use 240 grit aluminum oxide paper over a split rod, which is rotating in an electric drill to remove sharp edges.

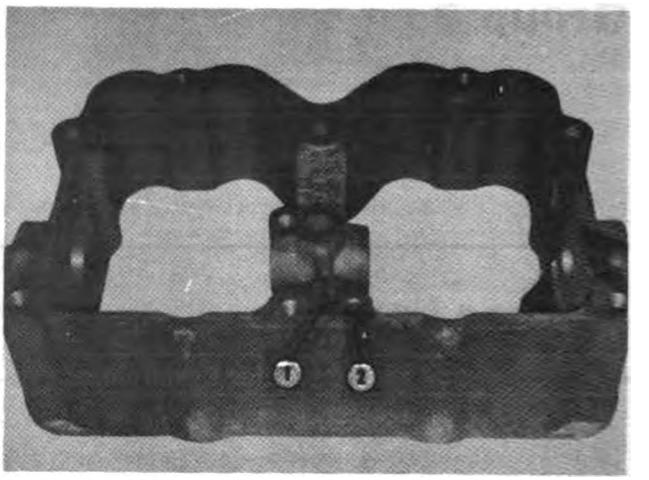

Fig. 3-2 (N10318-A). The Breather Vent Hole.

3. If the housing has a breather vent hole (1,Fig. 3-2), make sure it is free of dirt or other deposits.
4. Check rocker lever shaft bore of housing inside diameter. The dimensions must be 1.1238 to 1.1246 inch [28.545 to 28.565 mm]. If the shaft bore does not meet these dimensions, discard the housing. See the Parts Catalog for the correct part number.

Rocker Levers

Cleaning

Clean the levers thoroughly and dry with compressed air.

Inspection

1. Use magnetic inspection to check the surface. Use coil magnetization with amperage at 300 to 500 with residual Magnaglo. See Fig. 3-3 for most likely areas of damage. Demagnetize after checking.
2. Use a 1/4 inch radius gauge to check the ball end of rocker lever adjusting screw, Fig. 3-4. Replace the screw if the ball end is out of round or flat at the bottom. Check the thread condition on all screws and in the levers. Check carefully for threaded distortion at the assembly position of the locknut. Screws must move freely through the levers.
3. Inspect the sockets of the injector rocker lever for damage. Apply a bluing compound with

Digitized by Google

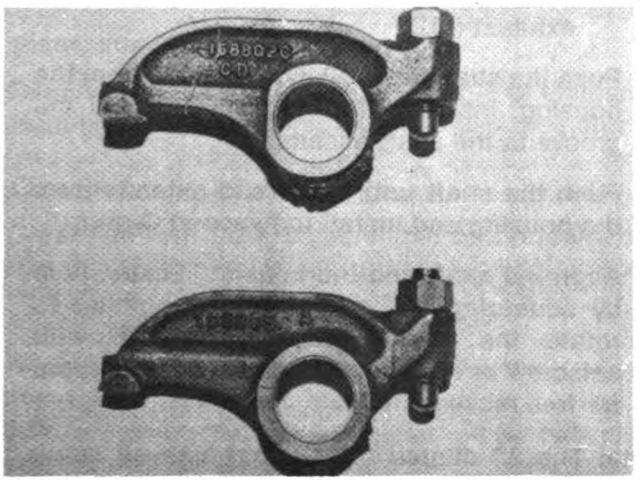

Fig. 3-3 (V40305). Areas To Check For Cracks.

Fig. 3-4 (N20305). Check The Ball End Of The Adjusting Screw.

Fig. 3-5 (V40306). Measure The Inside Diameter Of The Rocker Lever Bushing.

0.500 inch [12.70 mm] diameter gauge ball or a new injector link. The blue pattern must coat at least 80 percent of the socket.

4. Check the rocker lever bushings for damage. Check the rocker lever bushing inside diameter with inside micrometers or a small bore gauge. It must not exceed 1.1286 inches [28.664 mm], Fig. 3-5.

Repair

1. Replace sockets with unacceptable blue patterns. Drill a small hole in the lever above the socket and push the worn socket out. Stake the plug in the hole and replace the socket.
2. Replace the bushings whose inside diameter were more than 1.1286 inches [28.664 mm]. Use the ST-691 Mandrel and Block to remove the bushing. See the Parts Catalog for the current replacement bushing part numbers.
3. Install the new bushing with the mandrel and an arbor press. Fig. 3-6.
   a. On injector and exhaust valve levers, install the bushings so that the oil holes to the crosshead nose or the injector link and adjusting screw are open for oil flow.
   b. On intake valve levers with the oil hole to the end with the crosshead nose, install the bushing so that the hole is closed. Also the bushing "slot hole" must be in line with the oil hole to the adjusting screw. Do not cut a bore in steel bushings.

Fig. 3-6 (N20306). Install The Bushing Into The Rocker Lever.

Digitized by Google

Replacement

1. Check the surfaces of intake and exhaust rocker levers which are in contact with the crosshead. Replace them if they are worn or damaged.
2. Check the rocker lever shaft for wear or damage. If the shaft has ridges due to the action of rocker lever on the shaft, replace the shaft. See Table 3-1 (2) for shaft dimensions. Clean the shaft bore and dry thoroughly.

Assembly

Note: Solid plugs can be used in any rocker lever housing and must be used in all aluminum housings. The use of solid plugs to replace cup plug seals requires no changes to the shaft or housing.

1. Install the new plugs in the shaft until plug reaches bottom. Use the arbor press to push in both plugs at the same time.
2. Install the adjusting screws and locknuts in the rocker levers.
3. Start the shaft into the housing and install the levers as the shaft is pushed through. See Fig. 3-7 for correct position of levers. Make sure that you install the shaft correctly. The setscrew hole must be to the top and the seven oil holes must be toward the flat side of the housing.
   a. Install the exhaust (1), injector (2), and intake (3) levers.
   b. Install the intake (4), injector (5), and exhaust (6).
4. Push the shaft until 1/2 inch extends from the housing. Install a lightly oiled O-ring in the groove in the shaft assembly.
5. Push the shaft until other end extends from the housing and install the second O-ring.
6. Align the shaft and the housing locking hole by squeezing two rocker levers together to rotate the shaft. Secure the shaft with setscrew or oil spray nozzle. Check the levers for free movement.

Note: The 80 degree tilt engines use oil spray nozzles instead of setscrews in the rocker lever housings. The nozzles direct an oil spray to the ends of the rocker levers as shown in Fig. 3-8.

Follow these instructions to install the nozzles.

1. Install the jam nut onto the nozzle.
2. Install the nozzle and jam nut into the housing. Tighten the nozzle until it stops. Then loosen the nozzle so that the spray holes are aligned with the ends of the rocker levers (the ends opposite the adjusting screws).
3. Install the Part No. ST-1182 Spray Nozzle Locator so that the tube part of the tool is on the breather vent plug and the blade of the tool is in the slot in the spray nozzle, Fig. 3-8.
4. Tighten the jam nut.

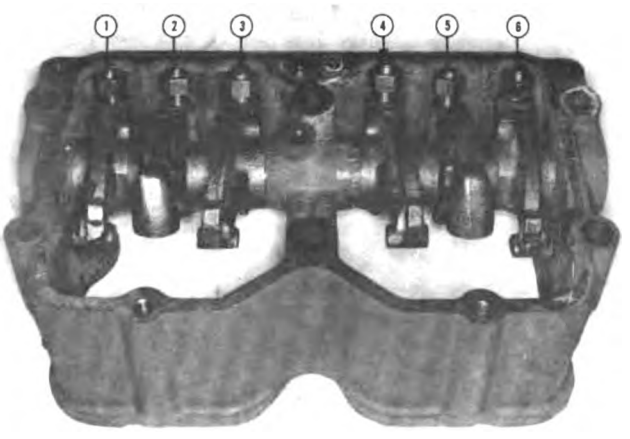

3-7 (N10326). The Rocker Lever Assembly.

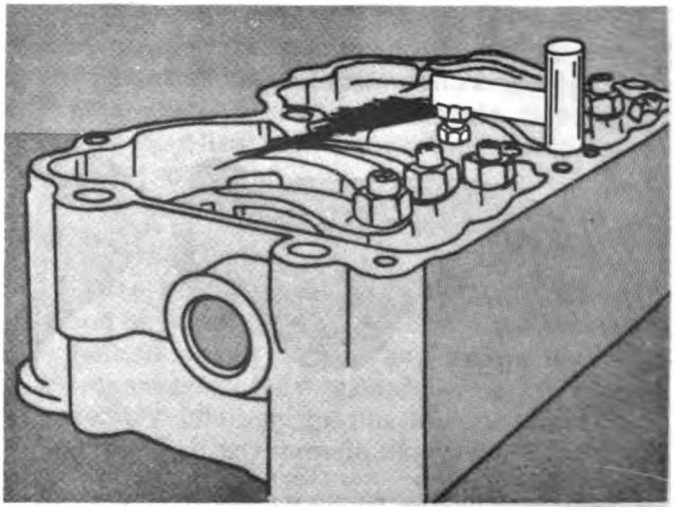

Fig. 3-8. Use The ST-1182 To Adjust The Spray Nozzles.

Digitized by Google

Crankcase Breather

Disassembly

Remove the cover, screens and baffle or element from breather body. Discard the paper element.

Cleaning

Clean the vent tube, screens and baffle foam, or the mesh element in an approved cleaning solvent. Clean the breather housing.

Replacement

1. Replace the paper or foam element.
2. Replace the gasket.

Note: Current engines which use a rocker lever cover that has a baffle plate do not have a baffle or screens in the crankcase breather body.

Assembly

Assemble the baffle, screens or element and a new gasket in the body. Install the cover.

Rocker Housing Cover

There are two types of rocker lever housing covers: plain and breather type.

Inspection

Remove all the gasket material from the sealing edge of cover. Inspect the cover for damage. Inspect the cover for cracks around all capscrew holes and breather port area.

Replacement

1. Replace any unacceptable gaskets.
2. Replace the cover if it is damaged.

Assembly

If a breather cover is used, press in the breather neck. Install the new or reconditioned breather body. Make sure the breather is pressed in straight. After the installation of breather body or breather neck, check carefully for cracks around the press fit area.

Table 3-1: Specifications — Inch [mm] (Reference Fig. 3-1)

		2 Inch Cam Engines			2-1/2 Inch Cam Engines		
Ref. No.	Measurement	Worn Limit	New Minimum	New Maximum	Worn Limit	New Minimum	New Maximum
1.	**Bushings** Inside Diameter	1.1286 [28.664]	1.1245 [28.562]	1.1275 [28.639]	1.1286 [28.664]	1.1245 [28.562]	1.1275 [28.639]
2.	**Shaft** Outside Diameter	1.122 [28.50]	1.123 [28.52]	1.124 [28.55]	1.122 [28.50]	1.123 [28.52]	1.124 [28.55]

Digitized by Google

Digitized by Google

Group 4

This section includes the inspection, repair and assembly of: cam follower, mechanical variable timing (MVT) mechanism, and push rods.

Cam Followers

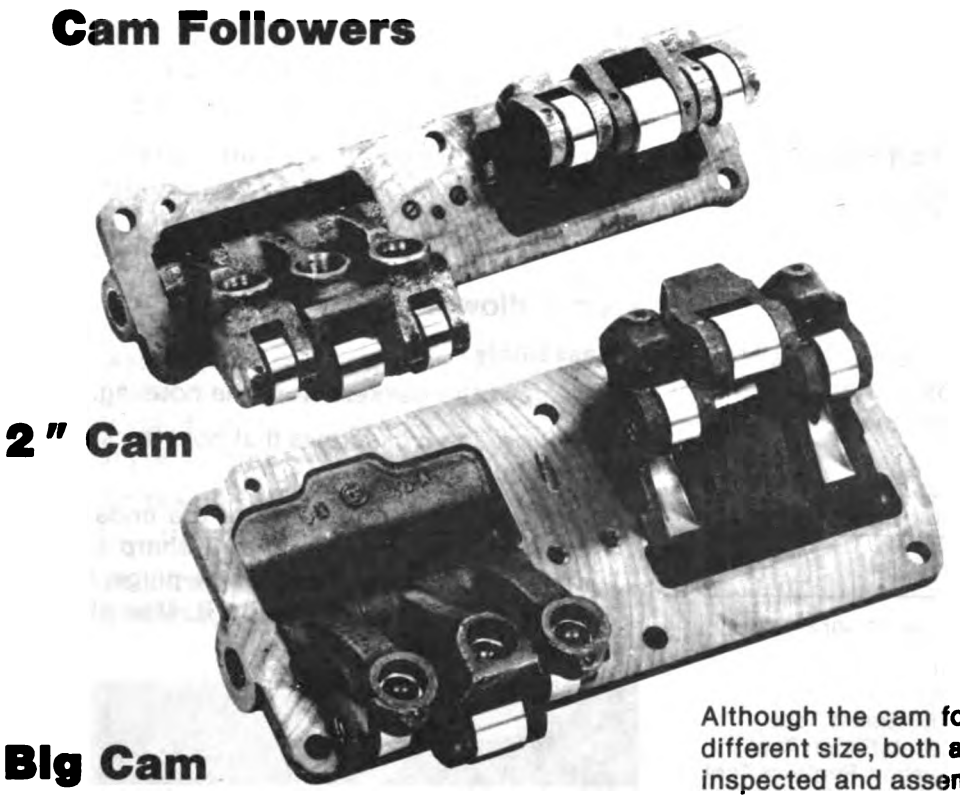

Fig. 4-1, (N10420). Cam followers comparison.

Although the cam followers and push rods are of different size, both assemblies are disassembled, inspected and assembled in like manner. Refer to Table 4-1 for dimensions.

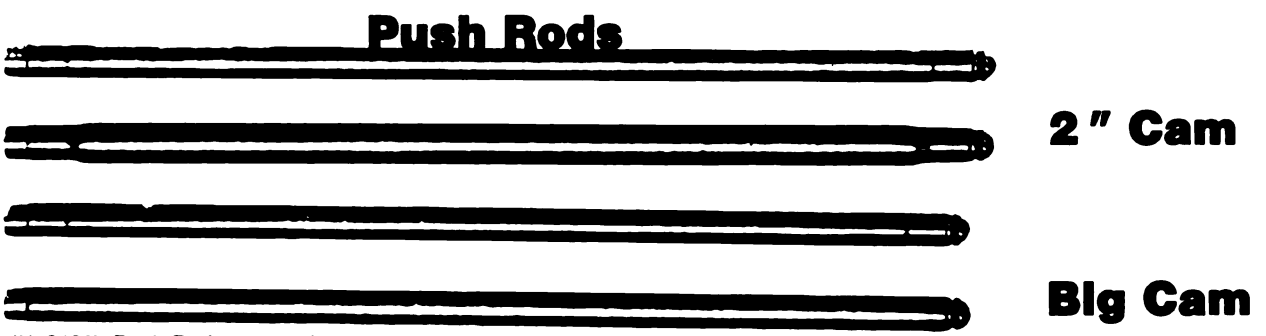

Fig. 4-2, (N10421). Push Rods comparison.

Digitized by Google

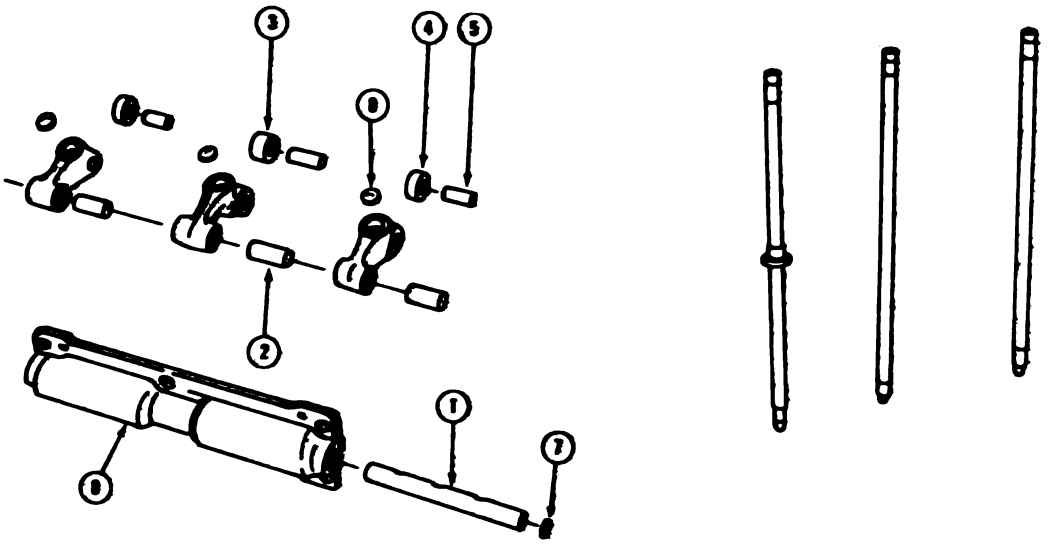

1. Shaft
2. Bushing
3. Injector Cam Roller
4. Valve Cam Roller
5. Valve Cam Roller Pin
6. Housing
7. Shaft Plug
8. Insert

Service Tool List

To repair the cam follower assembly and the MVT mechanism according to the inspections given in this section, the following service tools or tools of equal quality are required.

Service Tools (Or Equivalent) Required	
Service Tool Number	**Tool Name**
ST-195	Plug Gauge
ST-249	Mandrel and Block
ST-970	Plug Driving Mandrel
ST-1053	Plug Driving Mandrel
3376021	Actuator Retainer Adjustment Tool
3376022	Solenoid Valve Seat Installation Tool
3376023	Solenoid Stem Installation Removal Tool
3376024	Sleeve and Guide Installation Tool
3376025	Sleeve and Guide Removal Tool
3376026	Lever Bushing Block/Mandrel Set
3376027	Cam Follower Shaft Positioning Tool
3376028	Variable Timing Fixture
3376185	Male and Female Positioning Gauge
3376186	Expansion Plug Driver
3376209	Bracket and Studs (Variable Timing)

Standard Tools — Obtain Locally	
	Small Bore Gauge
	Micrometer (0 to 1 inch)
	Micrometers (1 to 2 inch)
	Snap Ring Pliers
	Feeler Gauge

Cam Followers

Disassembly

1. Remove the gaskets from the housing.
2. Remove the lockscrews that hold the shafts in the housing, Fig. 4-4.
3. Remove the cup plugs from the ends of the housing. Use a punch with a sharp point to make a hole in the center of the plugs. Hit one edge of the plug to loosen it. Use pliers to

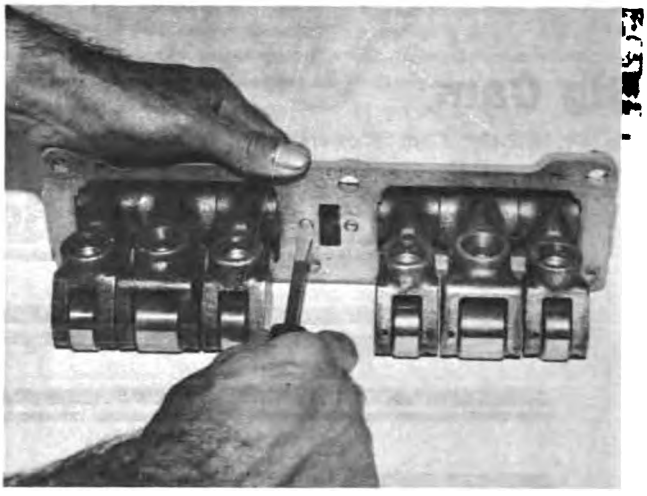

Fig. 4-4 (N10401). Remove The Lockscrew From The Shaft.

Digitized by Google

remove the plug. Install a mandrel in a press. Push the mandrel against the shafts in the housing to move the plug out of the hole in the opposite end of the housing.

4. Remove the cam follower levers from the housing.
5. Put a mark on the cam follower levers to identify their location in the housing as they are removed.

Cleaning

1. Put the cam follower shafts in a container of mineral spirits. Use compressed air to dry the shafts.
2. Clean the other parts with a cleaning solvent and dry with compressed air.

Caution: Make sure the oil passages in the levers are clean.

Inspection

1. Use micrometers to measure the outside diameter of the shaft, Fig. 4-5. The shaft must measure 0.7485 to 0.7490 inch [18.012 to 19.02 mm]. Replace the shaft if it is damaged or the outside diameter measures less than 0.748 inch [19.00 mm].

Note: On the part of the shaft for the lockscrew, make sure that the grooves are clean.

2. inspect the cam follower housing for cracks or other damage. Discard if damaged or worn.
3. Check the bushing in the cam follower lever for scratches or other damage. Use inside micrometers to measure the inside diameter of the bushing, Fig. 4-6. The bushing must measure 0.7501 to 0.7511 inch [19.053 to 19.078 mm]. Replace the bushing if it measures more than 0.752 inch [19.10 mm].
4. Use a magnetic inspection method to check the levers for cracks. Apply coil magnetization to the lever. Use 300 to 500 amperes with residual magnaglo. Fig. 4-7 shows the areas of the lever to check carefully for cracks.
5. Check the cup plug holes in the housing for damage or sharp edges. Use 240 grit aluminum oxide paper to remove any sharp

Fig. 4-6 (N10402). Measure The Cam Follower Bushing.

Fig. 4-5 (N10411). Measure The Cam Follower Shaft.

Fig. 4-7 (N10410). Check These Areas For Cracks.

Digitized by Google

edges. Put the aluminum paper in a rod that has a slot in the end to hold the paper. Install the rod in an electric drill. Start the drill and push the paper through the hole. Make a chamfer on the edge of the hole and remove any sharp edges.

6. Check the insert in the cam follower lever (3, Fig. 4-8) for wear or damage. Use a new push rod ball or a 0.625 inch [15.88 mm] checking ball to check the insert. Apply a prussian blue compound to the ball. Put the ball into the insert in the lever and rotate the ball 180 degrees, Fig. 4-9. Replace the insert if it is damaged or has less than 80 percent contact with the ball.

7. Remove the roll pins (5, Fig. 4-8), Roller pins (4) and rollers (6) from the cam levers (2).

8. Inspect the rollers. Use a small bore gauge to measure the inside diameter of the rollers, Fig. 4-10. Check the rollers to be sure they are not out-of-round. See Table 1 for the dimensions of the rollers. Use micrometers to measure the outside diameter at the roller, Fig. 4-11. The outside diameter of the roller must have a common center within 0.002 inch [0.05 mm].

9. Use micrometers to measure the outside diameter of the roller pins, Fig. 4-12. See Table 1 for dimensions of the roller pins.

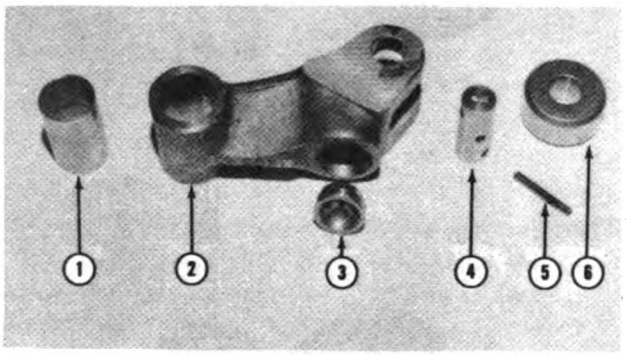

1. Bushing
2. Lever
3. Insert
4. Roller Pin
5. Roll Pin
6. Roller

Fig. 4-8 (N10412). Cam Follower — Exploded View.

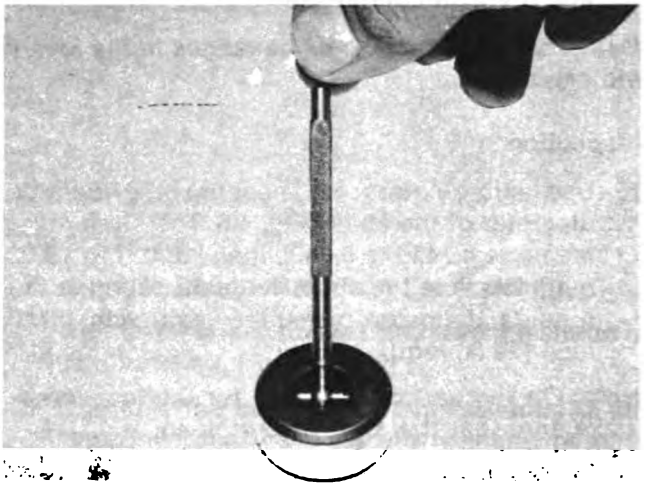

Fig. 4-10 (N10414). Measure The I.D. Of The Cam Roller.

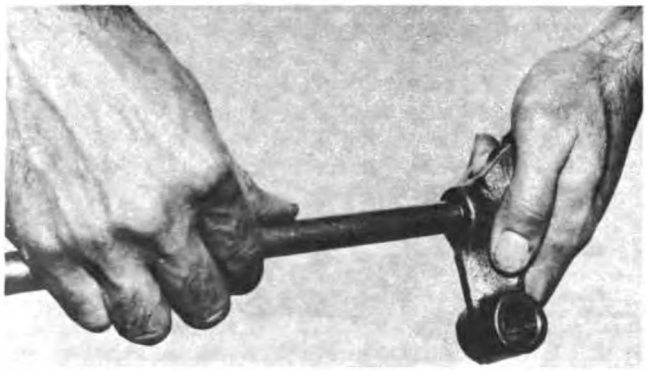

Fig. 4-9 (N10413). Using A Push Rod To Check The Insert.

Fig. 4-11 (N10415). Measure The O.D. Of The Cam Roller.

Digitized by Google

Table 4-1: Cam Follower Dimensions — Inch [mm]

	2 Inch Cam Engines			2-1/2 Inch Cam Engines		
Measurement	**Worn Limit**	**New Minimum**	**New Maximum**	**Worn Limit**	**New Minimum**	**New Maximum**
Shaft Outside Diameter	0.748 [19.00]	0.7485 [19.012]	0.749 [19.02]	0.748 [19.00]	0.7485 [19.012]	0.749 [19.02]
Bushing Inside Diameter	0.752 [19.10]	0.7501 [19.053]	0.7511 [19.078]	0.752 [19.10]	0.7501 [19.053]	0.7511 [19.078]
Injector Cam Roller						
Inside Diameter	0.505 [12.83]	0.503 [12.78]	0.504 [12.80]	0.705 [17.91]	0.703 [17.86]	0.704 [17.88]
Outside Diameter	1.2485 [31.71]	1.2490 [31.72]	1.251 [31.77]	1.2485 [31.71]	1.2495 [31.73]	1.2505 [31.76]
Valve Cam Rollers						
Inside Diameter	0.503 [12.78]	0.5005 [12.713]	0.5015 [12.738]	0.503 [12.78]	0.5005 [12.773]	0.5015 [12.708]
Outside Diameter	1.248 [31.71]	1.2490 [31.72]	1.2500 [31.75]	1.2485 [31.71]	1.2495 [31.73]	1.2505 [31.76]
Roller Pin Diameter						
Valve	0.497 [12.62]	0.4995 [12.687]	0.500 [12.70]	0.497 [12.62]	0.4997 [12.692]	0.500 [12.70]
Injector	0.497 [12.62]	0.4995 [12.687]	0.500 [12.70]	0.697 [17.70]	0.6997 [17.772]	0.7000 [17.780]
Diameter of the Bore for the Roller Pin						
Valve		0.4990 [12.674]	0.4997 [12.692]		0.4990 [12.674]	0.4995 [12.887]
Injector		0.4990 [12.674]	0.4997 [12.692]		0.6992 [17.759]	0.6997 [17.772]

10. Measure the roller pin bore in the cam follower lever. See Table 1 for dimensions.
11. If the rollers are damaged, be sure to inspect the camshaft for damage. Replace any part that is damaged or worn beyond the limits in Table 1.

Replacement

1. Replace the cam followers if they have any damage or cracks.
2. Replace the cam followers if they are worn beyond the limit.

Repair

1. Remove the bushing in the cam follower if the inside diameter of the bushing is more than 0.752 inch [19.10 mm]. Use the ST-249 Lever Bushing Block and Mandrel to remove the bushing, Fig. 4-13.
2. Use compressed air to clean the oil passages.
3. Use the ST-249 to install a new bushing in the

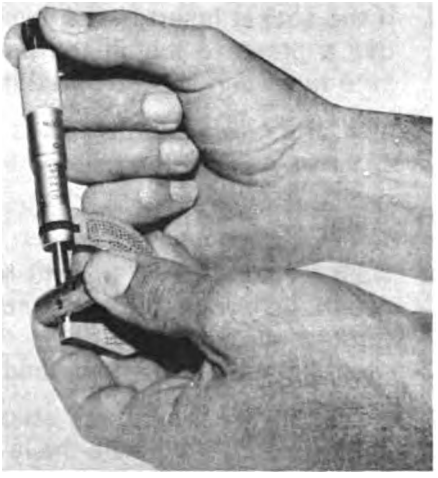

Fig. 4-12 (N10416). Measure The O.D. Of The Roller Pin.

Digitized by Google

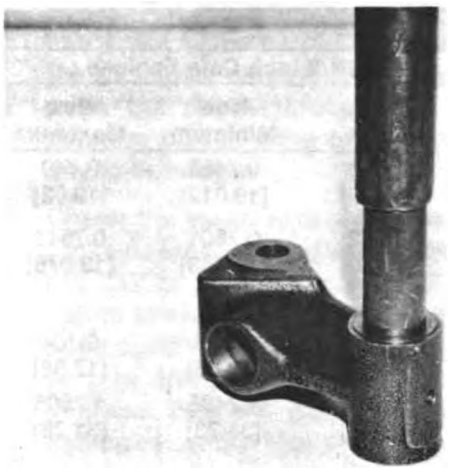

Fig. 4-13 (N10403). Remove The Bushing From The Cam Follower.

Fig. 4-14 (N10406). Install The Roller And Roller Pin.

lever. Make sure the oil hole in the bushing is aligned with the oil hole in the lever.

4. Cut a chamfer on each end of the bushing. Use a drill press at a slow speed and a chamfer tool that cuts a 60 degree angle chamfer.
5. Put soap into the oil hole in the bushing. This will prevent metal particles from entering the oil hole.
6. Cut the bore in the bushing to measure 0.7501 to 0.7511 inch [19.053 to 19.078 mm].
7. Use the ST-195 Plug Gauge to check the bore.
8. Use compressed air to remove the soap from the oil holes. Wash the lever in cleaning solvent and dry with compressed air.
9. If the socket insert in the lever was removed, use a press to install the new insert. Make sure the insert is installed tightly.

Caution: If a new socket insert is installed in the lever, a new push rod must also be used.

Assembly

1. Hold a 0.006 inch [0.15 mm] feeler gauge between the lever and roller. Install the roller pin through the lever and roller, Fig. 4-14. Install the roll pins into the lever and roller pin.
2. Assemble the levers and shafts in the housing, Fig. 4-15. Make sure the lever for the injector is in the center position in each assembly.

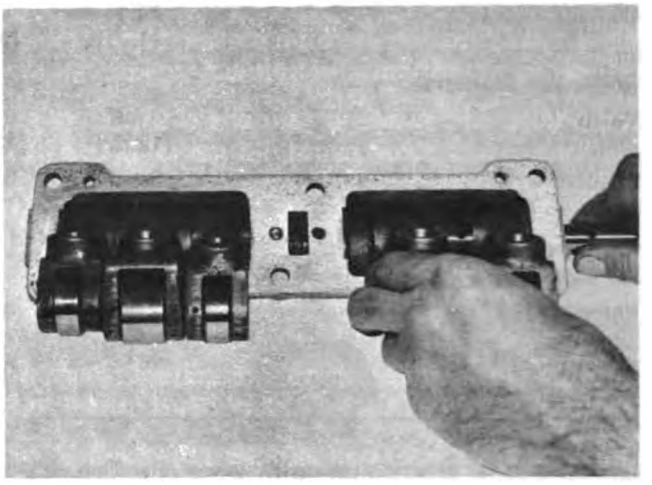

Fig. 4-15 (N10407). Assemble The Levers And Shafts Into The Housing.

Note: Make sure the push rod sockets in the levers and the dowel holes in the housing are to the top when the assembly is mounted on the engine.

3. Install a temporary screw in the shaft. This will prevent breakage of the lockscrew when the plug is installed in the housing.
4. Apply a light coat of sealant to the hole in each end of the housing. Use the ST-1053 Expansion Plug Driver to install the cup plug. Install the plug so it is at least even with the edge of the hole or not more than 0.010 inch [0.25 mm] below the edge of the hole, Fig. 4-16.
5. Remove the temporary screws and install the lockscrews in the shafts.

Digitized by Google

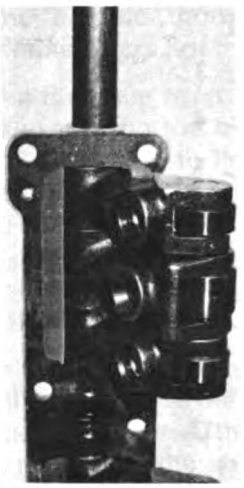

Fig. 4-16 (N10409). Install The Cup Plugs

Mechanical Variable Timing (MVT)

Operating Principles

Mechanical Variable Timing (MVT) is used to control the emissions produced by the engine. To control the emissions, the MVT changes the fuel injection timing according to the load put on the engine. This is done by changing the position of the injector cam follower levers on the camshaft.

The MVT actuator is an air operated cylinder that controls the movement of the injector cam follower levers. The shaft in the actuator has a rack of teeth that joins with a gear on the cam follower shaft. The raising and lowering of the plunger in the actuator causes the shaft and gear to rotate the cam follower shaft. Eccentric cylinders are mounted to the cam follower shaft. The levers are mounted to the eccentric. The eccentrics and levers are held to the cam follower shaft by setscrews. Rotating the cam follower shafts causes the levers to change position of the camshaft and changes the injection timing.

Air flow to and from the actuator is controlled by a solenoid valve mounted to the actuator. An electrical switch that senses a change in fuel pressure, or engine load, opens or closes the solenoid valve. The air for the actuator is supplied through a line from the dry air storage tanks of the vehicle. When the engine is started, and the air system of the vehicle is less than 80 psi [551 Kpa], the spring in the actuator holds the plunger in the down position. When the plunger is in the down position, the injection timing is retarded. When the air pressure in the vehicle air system exceeds 80 psi [Kpa], the air pressure raises the plunger. This causes the injection timing to advance. The air pressure will hold the plunger in the raised position (advanced injection timing) until the engine reaches 25 percent of rated power. When the engine reaches approximately 25 percent of rated power, the electrical pressure switch causes the solenoid valve to close. With the valve closed the air supply to the actuator is shut off. The air pressure against the plunger becomes less than 80 psi [5t51 Kpa] and the spring moves the plunger down to retard the injection timing. From 25 percent of rated power to full power the engine runs with retarded injection timing.

Some design changes have been added to the NTC engine with MVT. The cam follower housings are joined together by a spline coupling between the housings. The three housings must be installed as an assembly. One gasket is used for all three housings instead of a seperate gasket for each housing. A special camshaft is used with MVT. Adjustments to injection timing are made by an adjustment sleeve in the actuator instead of adding or removing cam follower housing gaskets.

Warning: Do not try to adjust the MVT for continuous operation with the injection timing advanced. This will not increase the power of the engine, but will increase the emissions of the engine. Operating the engine continuously with advanced injection timing at above 25 percent of the rated RPM of the engine will cause high stress and damage to the engine.

Disassembly

Center Housing

1. Remove the housing to the left of the center cam follower housing.
2. Remove the spline coupling and seal.
3. Remove the housing and seal to the right of the center housing.
4. Disassemble the actuator.
   a. Remove the cap from the actuator.
   b. Remove the locknut and washers for the spring retainer. Use the 3376021 Actuator Adjustment Tool to hold the retainer while removing the locknut, put a mark on the

Digitized by Google

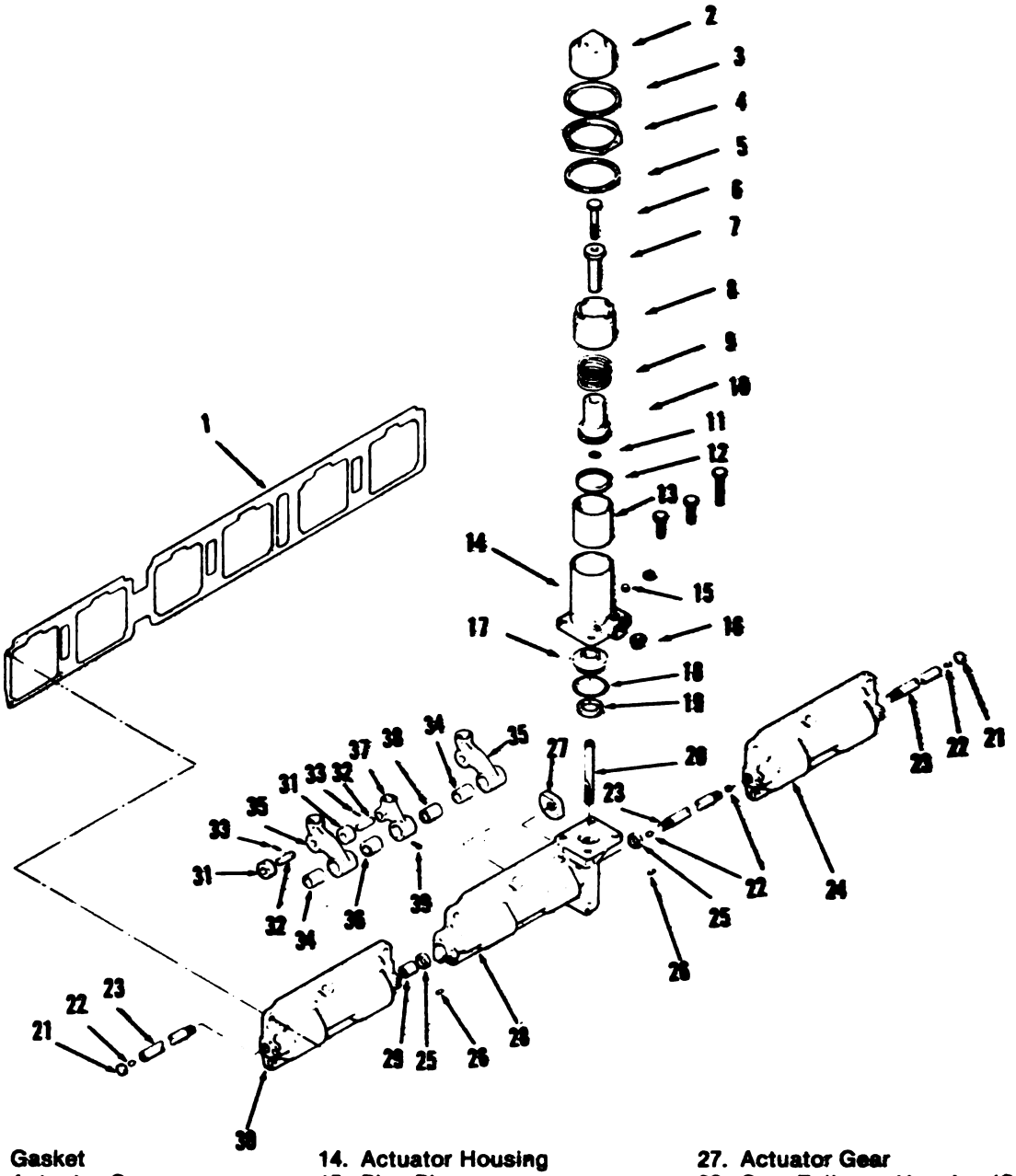

1. Gasket
2. Actuator Cap
3. Copper Washer
4. Nut
5. Copper Washer
6. Capscrew
7. Spacer
8. Actuator Spring Retainer
9. Actuator Spring
10. Actuator Plunger
11. O-Ring
12. Plunger Seal
13. Sleeve
14. Actuator Housing
15. Pipe Plug
16. Solenoid Seat
17. Actuator Shaft Guide
18. O-Ring
19. Seal
20. Actuator Shaft
21. Cup Plug
22. Expansion Plug
23. Cam Follower Shaft
24. Cam Follower Housing (Rear)
25. Seal
26. Roll Pin
27. Actuator Gear
28. Cam Follower Housing (Center)
29. Coupling
30. Cam Follower Housing (Front)
31. Roller
32. Roller Pin
33. Roll Pin
34. Bushing
35. Cam Follower Lever (Valve)
36. Eccentric
37. Cam Follower Lever (Injector)
38. Bushing
39. Setscrew

Fig. 4-17. Exploded View Of Cam Follower Housing And Actuator (MVT).

Digitized by Google

retainer and actuator housing to make sure the retainer does not move.

c. Measure the distance from the top of the spring retainer to the top of the actuator housing. This will help to find the correct injection timing when you assemble the actuator. If the retainer turned more than one-fourth of a turn when you removed the locknut, use the ST-593 Injection Timing Fixture to time the engine.

d. Remove the capscrew from the actuator shaft. Before you remove the capscrew, hit the capscrew lightly with the handle of a hammer to make sure the plunger is down.

e. Remove the spring retainer and spacer.

f. Remove the actuator housing and shaft from the cam follower housing.

g. Remove the plunger and shaft from the actuator housing.

h. Remove the air filter and adapter from the solenoid valve. Discard the O-ring.

i. Remove the jam nut. Remove the solenoid valve.

j. Remove the solenoid stem and spring from the housing. Use the 3376023 Solenoid Stem Installation and Removal Tool to remove the stem. Remove and discard the sealing ring.

5. Remove the expansion plug from the cam follower housing.

6. Remove the setscrews from the injector cam follower eccentric.

7. Remove the shaft, levers and gear from the housing. Put a mark on the levers to identify their location in the housing as they are removed.

8. Remove the eccentric from the injector cam follower lever.

End Housings

1. Remove the expansion plugs from the housings.

2. Remove the setscrews from the injector cam follower levers.

3. Put a mark on the levers to identify the location of the levers in the housings.

4. Remove the shaft and levers from the housing.

5. Remove the eccentrics from the cam follower levers.

Cleaning

1. Put the cam follower shafts and actuator shaft in a container of mineral spirits. Use compressed air to dry the shafts.

2. Clean the other parts with a cleaning solvent and dry with compressed air. Make sure the oil passages in the levers are clean.

Caution: Do not clean the solenoid coil.

Inspection

1. Use micrometers to measure the outside diameter of the shaft. See Table 2 for dimensions. Check the shaft and the teeth at the end of the shaft for wear or damage.

2. Check the cam follower housings for cracks or other damage. Discard damaged or worn parts.

3. Check the bushing in the cam follower levers for scratches or other damage. Use inside micrometers to measure the inside diameter of the bushings, Fig. 4-18. Replace the bushings if they are not within the limits given in Table 2.

4. Use a magnetic inspection method to check the levers for cracks. Apply coil magnetization to the levers. Use 300 to 500 amperes with

Fig. 4-18 (N10402). Measure The Cam Follower Bushing.

Digitized by Google

residual magnaglo. Fig. 4-19 shows the areas of the lever to check carefully for cracks.

5. Check the cup plug holes in the housing for damage or sharp edges. Use 240 grit aluminum oxide paper to remove sharp edges. Put the aluminum paper in a rod that has a slot in the end to hold the paper. Install the rod in an electric drill. Start the drill and push the paper through the hole. Make a chamfer on the edge of the hole and remove any sharp edges.

6. Check the insert in the levers for wear or damage. Use a new push rod ball or a 0.625 inch [15.88 mm] checking ball to check the insert. Apply a coat of prussian blue compound to the ball. Put the ball into the insert and rotate the ball 180 degrees, Fig. 4-20. Replace the insert that is damaged or has less than 80 percent contact with the ball.

7. Check the roller pins for wear or damage. Use micrometers to measure the outside diameter of the pins. Replace the pin if it is damaged or worn beyond the limits in Table 2.

8. Check the rollers for wear or damage. Measure the inside diameter and the outside diameter. Replace the roller if it is damaged or worn beyond the limits in Table 2. If the roller

Fig. 4-19 (N10410). Check These Areas For Cracks.

Fig. 4-20 (N10413). Using A Push Rod To Check The Insert.

Table 2: MVT Cam Follower Dimensions — Inch [mm]

Measurement	Worn Limit	New Minimum	New Maximum
Cam Follower Shaft Outside Diameter	0.748 [19.00]	0.7485 [19.01]	0.7499 [19.02]
Bushing Inside Diameter			
Valve	0.752 [19.10]	0.7501 [19.05]	0.7511 [19.07]
Injector		1.3765 [34.96]	1.3775 [34.98]
Injector Cam Roller			
Inside Diameter	0.705 [17.91]	0.703 [17.86]	0.704 [17.88]
Outside Diameter	1.2485 [31.71]	1.2495 [31.73]	1.2505 [31.76]
Valve Cam Roller			
Inside Diameter	0.503 [12.78]	0.5005 [12.71]	0.5015 [12.73]
Outside Diameter	1.2485 [31.71]	1.2495 [31.73]	1.2505 [31.76]
Roller Pin Outside Diameter			
Valve	0.497 [12.62]	0.4997 [12.692]	0.5000 [12.70]
Injector	0.697 [17.70]	0.6997 [17.772]	0.7000 [17.78]
Diameter Of The Bore For The Roller Pin			
Valve		0.4990 [12.67]	0.4995 [12.68]
Injector		0.6992 [17.76]	0.6997 [17.77]
Eccentric Outside Diameter		1.3743 [34.90]	1.3748 [34.92]

Digitized by Google

is damaged be sure to check the camshaft for damage.

9. Measure the inside diameter of the roller pin bore in the lever. Discard the lever if the roller pin bore is worn beyond the limits in Table 2.
10. Check the cylinder of the actuator housing for damage. If the cylinder sleeve is damaged, remove the sleeve from the housing. Use the Part No. 3376025 Sleeve and Guide Removal Tool and a press to push the sleeve and shaft guide from the housing.
11. Check the actuator shaft for wear or damage. Check the teeth on the shaft for wear or damage. Check the threads in the end of the shaft for damage. Replace the shaft if it is damaged.

Repair

Cam Follower Lever

1. If the bushing in the cam follower lever is beyond the limit in Table 2, Remove the bushing. Use the ST-249 Lever Bushing Block and Mandrel to remove the bushing, Fig. 4-21. Use the 3376026 to remove the bushing in the injector cam follower lever.
2. Use compressed air to clean the oil passages.
3. Use the ST-249 to install a new bushing in the lever. Make sure the oil hole in the bushing is aligned with the oil hole in the lever. Use the 3376026 to install the bushing in the injector cam follower lever.
4. Cut a chamfer on each end of the bushing. Use a drill press operating at slow speed with a chamfer tool that cuts a 60 degree angle chamfer.
5. Put soap into the oil hole in the bushing. This will prevent metal particles from entering the oil hole.
6. Cut the bore in the bushing. See Table 2 to find the correct dimension for the bushings.
7. Use compressed air to remove the soap from the oil holes. Wash the levers in cleaning solvent and dry with compressed air.
8. If the socket insert was removed from the lever, use a press to install a new socket insert. Make sure the insert is installed tightly.

Caution: If a new socket insert is installed in the cam follower lever, a new push rod must also be used.

Assembly

The End Cam Follower Housings

1. Hold a 0.006 inch [0.15 mm] feeler gauge between the lever and roller. Install the roller pin through the lever and roller, Fig. 4-22. Remove the feeler gauge. Fasten the roller pin with a roll pin.
2. Apply a light coat of sealant to the cup plug hole in the housing. Use the ST-1053 Expansion Plug Driver to install the cup plug. Install the cup plug in the housing so it is even with

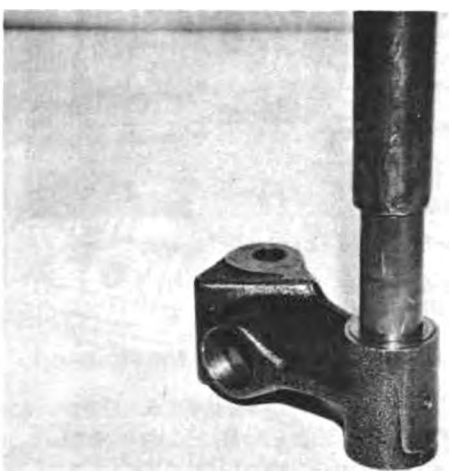

Fig. 4-21 (N10403). Remove The Bushing From The Cam Follower.

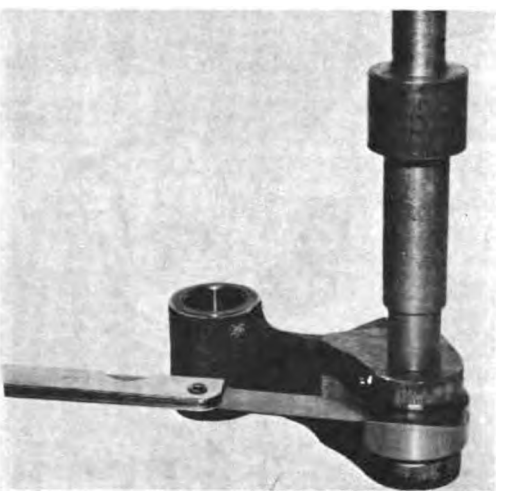

Fig. 4-22 (N10406). Install The Roller And Roller Pin.

Digitized by Google

the edge of the hole and not more than 0.010 inch [0.25 mm] below the edge of the hole.

Note: The front and rear cam follower housings are the same and require only one cup plug per housing. The end of the housing the plug is installed into will determine if the housing is a front or rear housing. The center housing does not have a cup plug.

3. Use the 3376186 Expansion Plug Driver to install an expansion plug into each end of the cam follower shaft. Push the plug into the shaft until the edge of the plug is even with the end of the shaft.
4. Install the eccentric into the bore of the injector cam follower lever. Install the setscrew into the eccentric to hold the eccentric in position in the lever, Fig. 4-23. Make sure the setscrew does not extend into the shaft bore of the eccentric.
5. Put the valve follower levers and injector follower levers in their correct location in the cam follower housing.
6. Install the shafts for the end housings. Slide the shaft through the bores in both the housing and levers so that the spline end of the shaft extends from the housing. Make sure the flat part of the shaft aligns with the setscrews in the eccentric.
7. Put the shaft so that the spline extends 0.915 to 0.935 inch [23.24 to 23.76 mm] from the housing. Use the Part No. 3376185 Shaft Positioning Tool to adjust the shaft to the correct dimension, Fig. 4-24.
8. Tighten the setscrews in the eccentrics to 45 to 55 ft.-lbs. [61 to 75 N•m] torque, Fig. 4-25.
9. Make sure the follower levers move freely on the shaft.

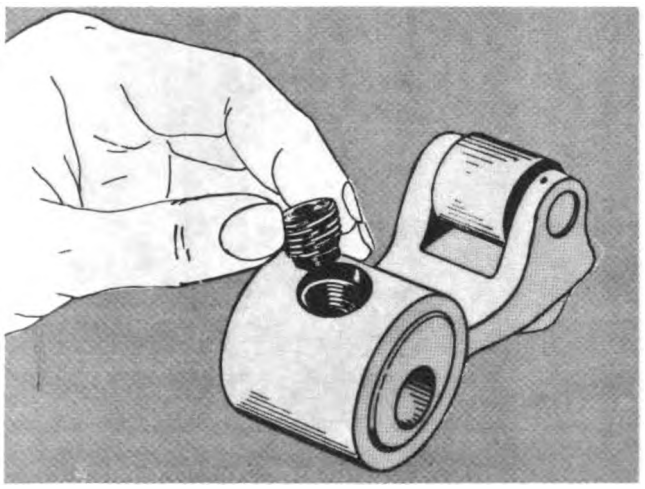

Fig. 4-23. Install The Setscrew For The Eccentric.

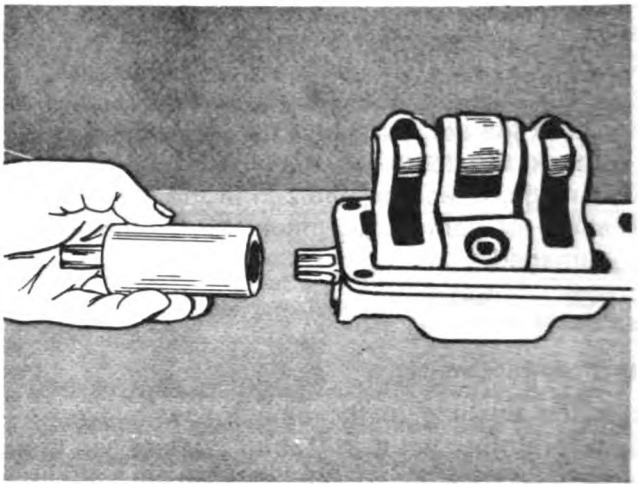

Fig. 4-24. Use The 3376185 Tool To Adjust The Protrusion Of The Shaft.

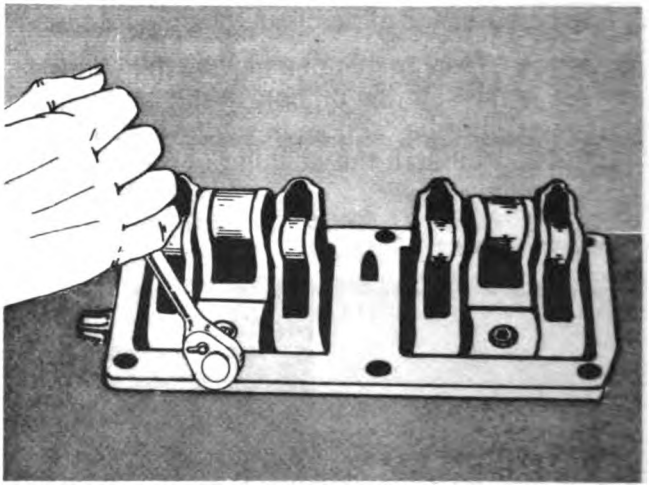

Fig. 4-25. Tighten The Setscrew For The Eccentric.

The Center Cam Follower Housing

1. Install a roll pin into each end of the housing.
2. Use the 3376186 Driver to install an expansion plug into each end of the shaft. Push the plug into the shaft until the edge of the plug is even with the end of the shaft.

Digitized by Google

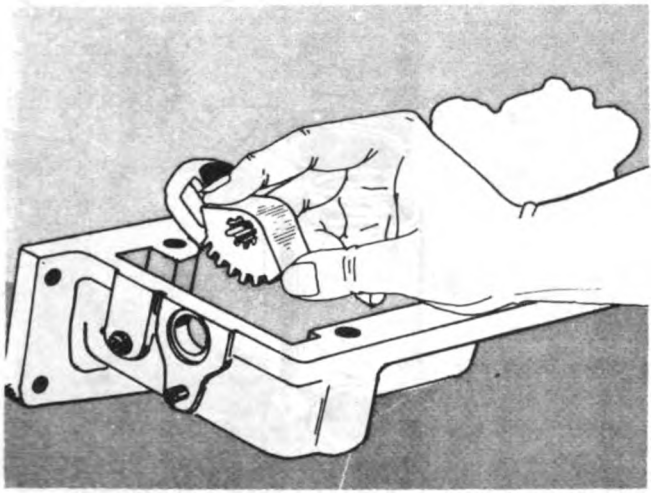

Fig. 4-26. Position The Actuator Gear Into The Housing.

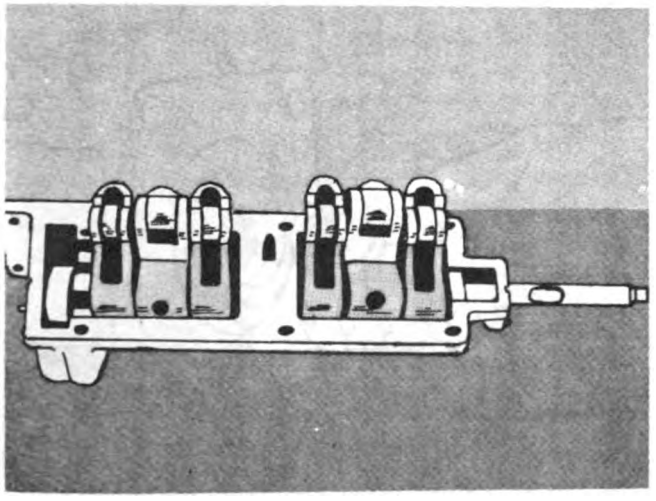

Fig. 4-27. Install The Shaft Into The Housing.

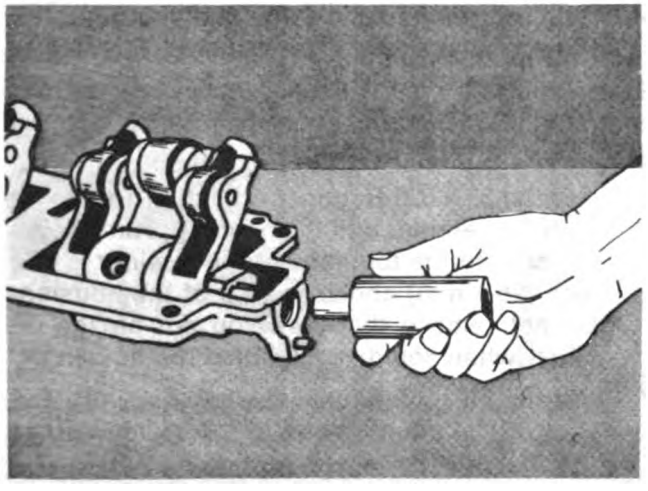

Fig. 4-28. Use The 3376185 Tool To Adjust The Shaft.

3. Install the eccentric into the bore of the injector cam follower lever. Install the setscrew into the eccentric to hold the eccentric in position in the lever. Make sure the setscrew does not extend into the shaft bore of the eccentric.

4. Put the valve follower levers and injector follower levers in their correct location in the cam follower housing.

5. Put the actuator gear in the housing, with the teeth of the gear next to the housing. Make sure the part of the gear that has a wide tooth is toward the bottom of the housing, Fig. 4-26.

6. Install the shaft in the housing. Slide the shaft through the bores in the housing, levers and gear, Fig. 4-27. At the end of the shaft, the wide tooth of the spline must align with the wide groove in the bore in the gear. Make sure the flat part of the shaft aligns with the setscrews in the eccentrics.

7. Position the shaft so that the end opposite the actuator gear is at a depth of 0.996 to 1.000 inch [25.30 to 25.40 mm] from the end of the housing. Use the 3376185 Tool to adjust the shaft to the correct dimension, Fig. 4-28.

8. Tighten the setscrews in the eccentrics to 45 to 55 ft.-lbs. [61 to 75 N•m] torque.

9. Make sure the follower levers move freely on the shaft.

10. If the actuator sleeve and shaft guide were removed from the actuator housing, install a new sleeve and shaft guide. Use the 3376024 Sleeve and Shaft Guide Installation Tool and an arbor press to install the sleeve. With the mounting surface of the housing up, put the housing on the press. With the machine part of the outside diameter of the sleeve up, push the sleeve into the housing, Fig. 4-29.

11. Install a new O-ring onto the shaft guide. With the O-ring up, push the shaft guide into the housing, Fig. 4-30. Use the 3376024 tool to install the shaft guide.

12. Install a new rectangular sealing ring to the actuator plunger. Install the plunger in the actuator housing, Fig. 4-31.

13. Install the actuator spring in the housing.

Digitized by Google

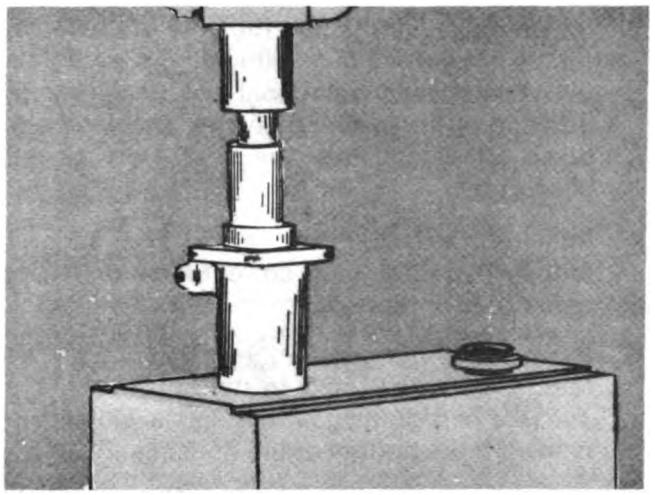

Fig. 4-29. Install The Sleeve Into The Housing.

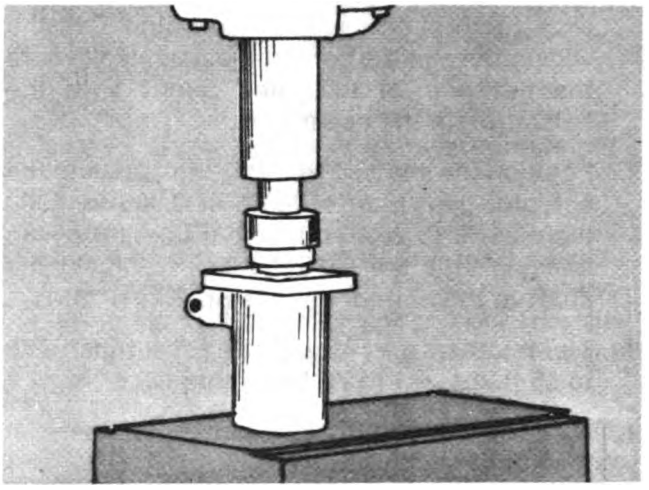

Fig. 4-30. Install The Shaft Guide.

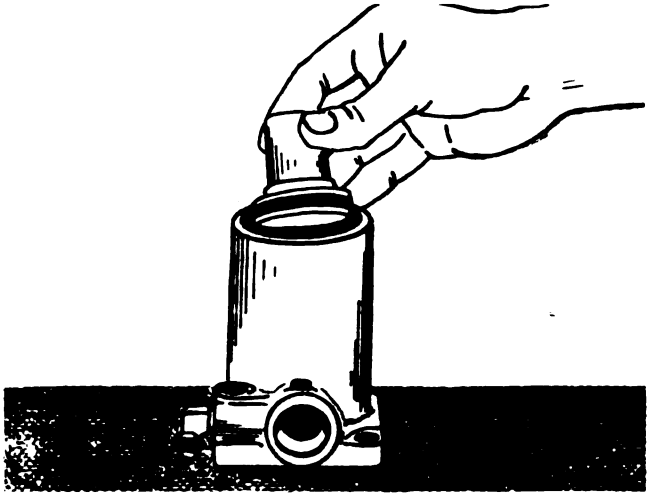

Fig. 4-31. Install The Plunger Into The Housing.

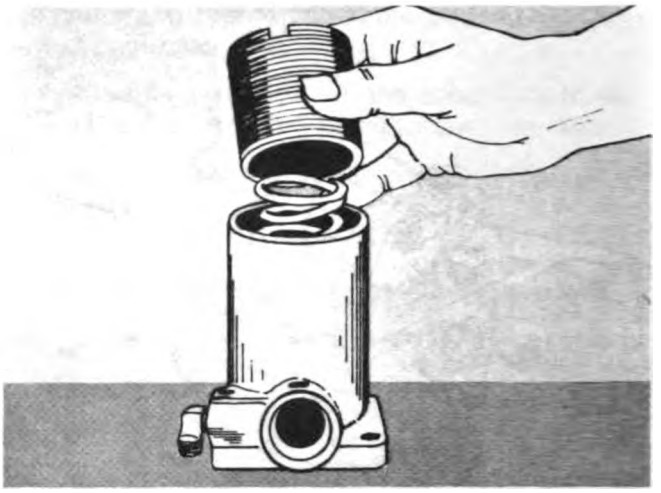

Fig. 4-32. Install The Spring Retainer.

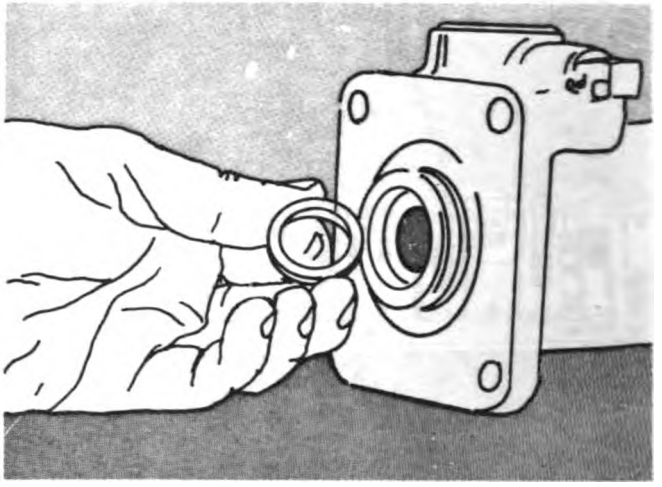

Fig. 4-33. Install The Sealing Ring Into The Shaft Guide Counterbore.

14. With the notched end of the retainer up, install the spring retainer in the housing, Fig. 4-32.

Note: You will need to press down against the spring to start the threads of the retainer into the housing.

15. Use the 3376021 Retainer Adjusting Tool to install the retainer into the housing. Turn the retainer until the top edge of the retainer is one inch [25.4 mm] above the top of the housing. Do not remove the mark you put on the retainer when you disassembled the housing.

16. Install the rectangular sealing ring into the shaft guide counterbore, Fig. 4-33. Make sure the lip on the sealing ring is toward the plunger.

Digitized by Google

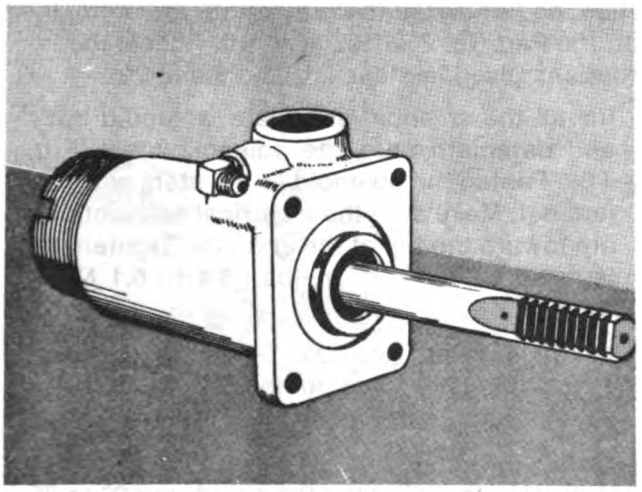

Fig. 4-34. Install The Actuator Shaft.

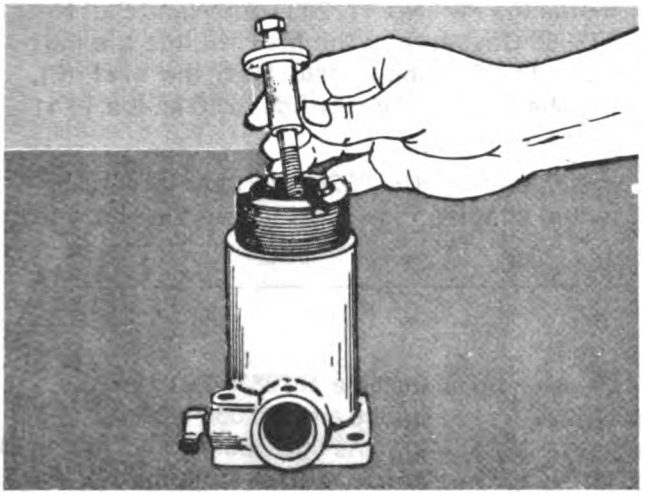

Fig. 4-35. Install The Spacer And Retainer Capscrew.

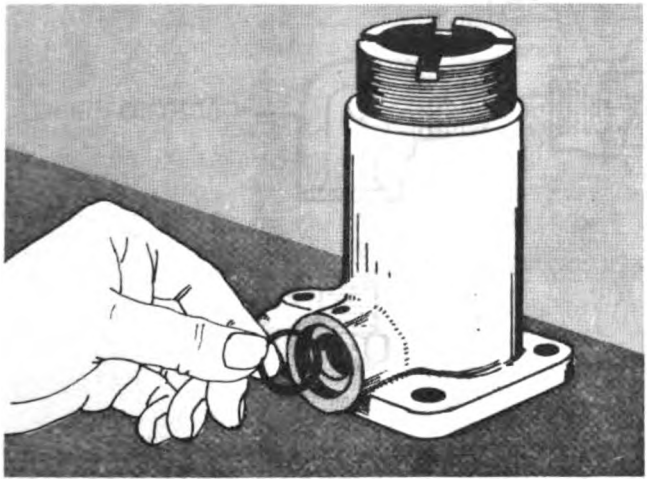

Fig. 4-36. Install The Sealing Ring.

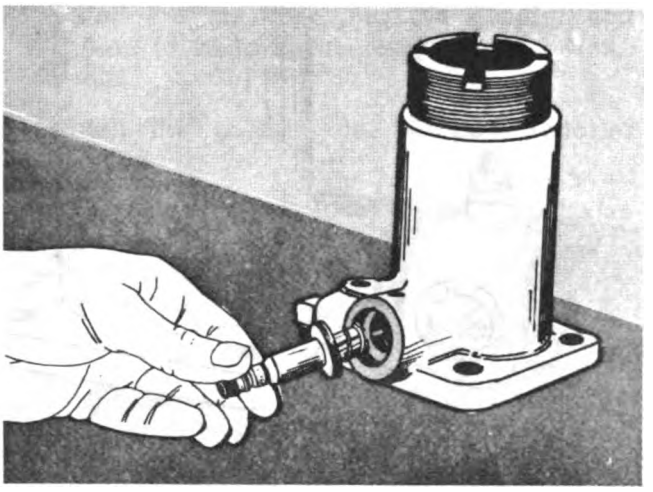

Fig. 4-37. Install The Plunger And Spring Assembly.

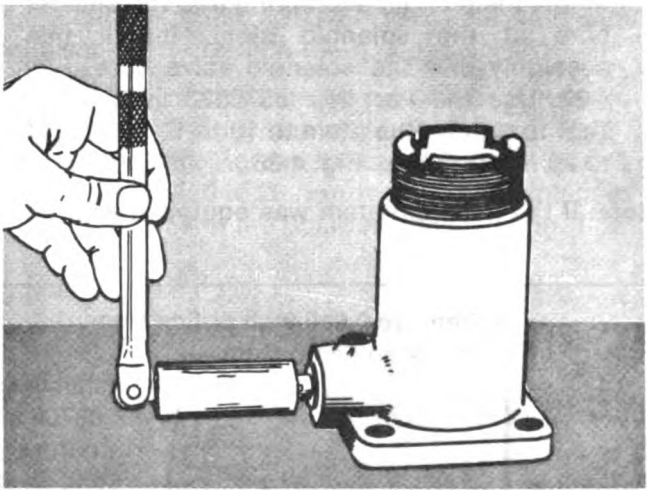

Fig. 4-38. Tighten The Plunger And Spring Assembly.

17. Install a new O-ring into the groove in the inside diameter of the plunger. Lubricate the O-ring with engine lubricating oil.

18. Install the actuator shaft. Push the shaft threaded end first, through the sealing ring and shaft guide and into the plunger bore, Fig. 4-34. Make sure the shaft goes all the way into the plunger bore.

19. Install the spacer and retaining capscrew through the spring retainer, Fig. 4-35. Install the capscrew into the actuator shaft, but do not tighten to the torque value.

20. Install a new sealing ring in the solenoid valve bore, Fig. 4-36. Lubricate the sealing ring with clean engine lubricating oil.

Digitized by Google

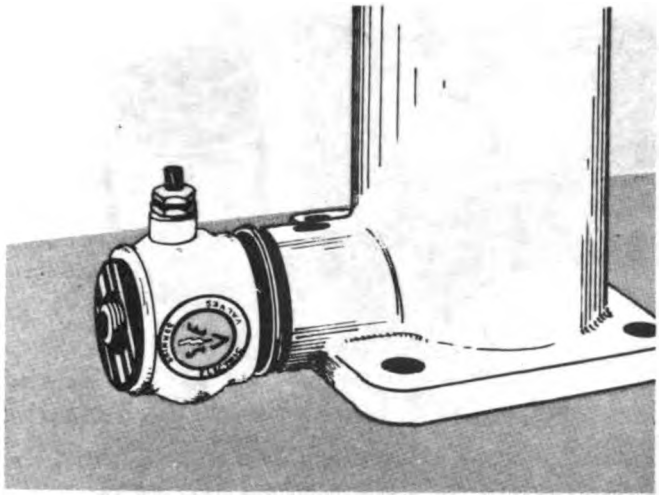

Fig. 4-39. Install The Solenoid Body.

21. Install the plunger and spring into the plunger bore of the solenoid stem. Install this assembly into the solenoid valve bore, Fig. 4-37. Use the Part No. 3376023 Installation Tool to tighten the stem to 10 to 15 ft.-lbs. [14 to 20 N•m] torque, Fig. 4-38.

Note: If the solenoid stem was equipped with an orifice, do not install the orifice into the stem. Install the Part No. 3028355 MVT Kit. Follow the instructions given in steps 23, 25, 26 and 29.

22. Install the solenoid end plate, solenoid body and dataplate onto the solenoid stem, Fig. 4-39. Fasten the solenoid to the stem with the jam nut. Make sure the electrical connections are toward the top of the actuator. Tighten the jam nut to 30 to 45 in.-lbs. [3.4 to 5.1 N•m] torque.
23. Install the Part No. 3008706 Screen and the Part No. 174299 Clip from the MVT Kit into the solenoid adapter, Fig. 4-40.
24. Install the adapter and a new O-ring on the solenoid stem. Tighten the adapter to 20 to 25 in.-lbs. [2.2 to 3.0 N•m] torque.
25. Install the Part No. 177283 Orifice and Part No. 173086 Gasket from the MVT Kit into the Part No. 3028353 Elbow, also from the MVT Kit, Fig. 4-40. Tighten the orifice to 10 in.-lbs. [0.11 N•m] torque.
26. Install the Part No. 3028353 Elbow into the solenoid adapter, Fig. 4.40. Tighten the elbow to

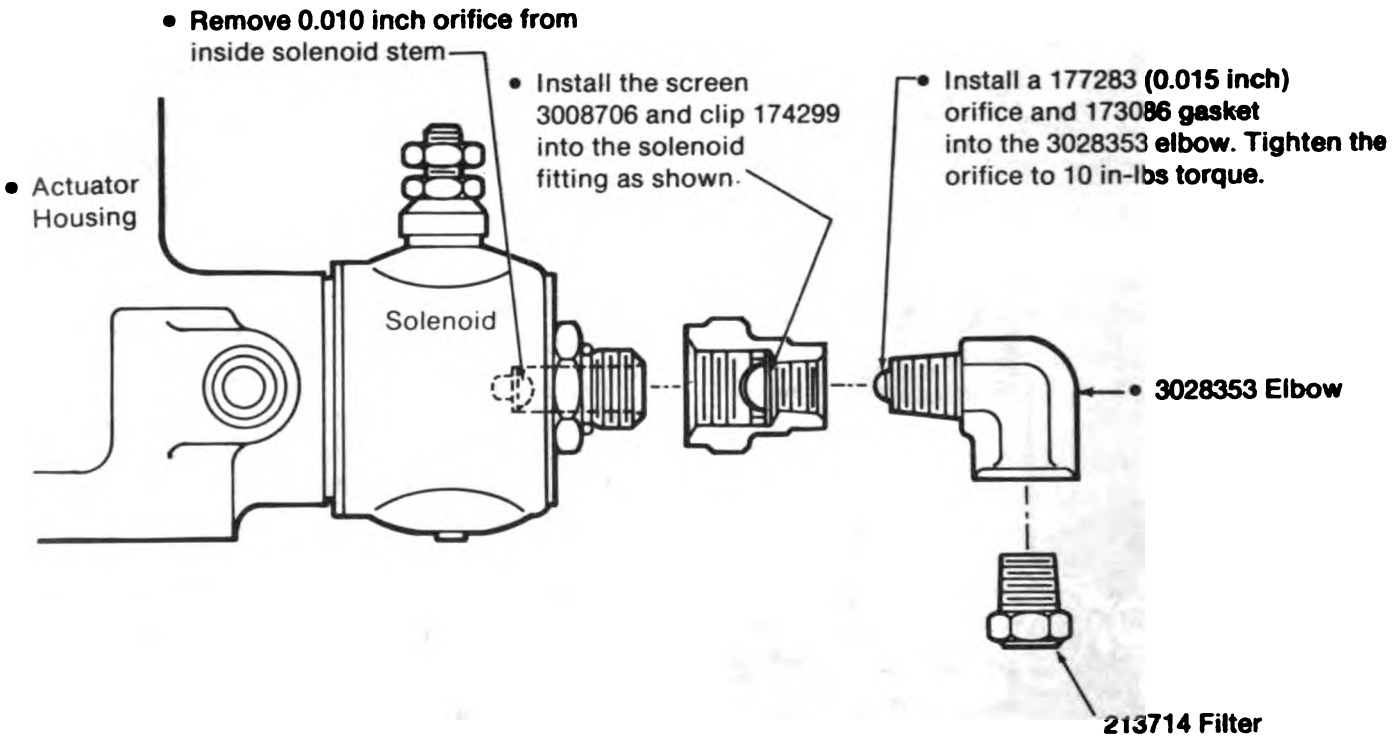

Fig. 4-40. Part No. 3028355 MVT Kit (Solenoid Valve)

Digitized by Google

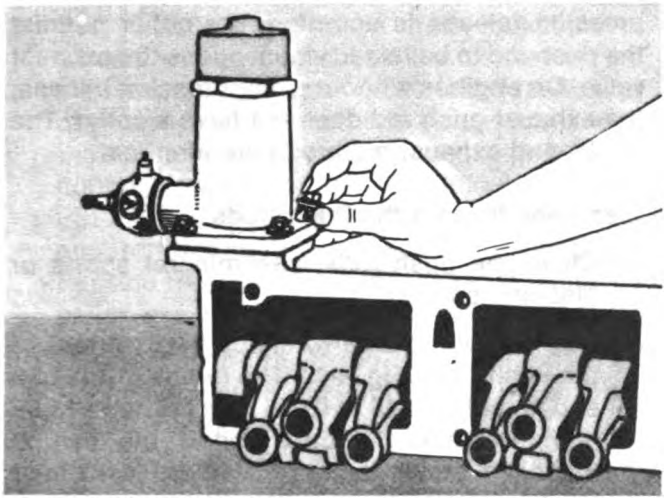

Fig. 4-41. Fasten The Actuator To The Cam Follower Housing.

25 in.-lbs. [2.8 N•m] torque. The elbow must point straight down after it is installed. If the elbow has been tightened to the correct torque value and does not point down, remove the elbow. Apply teflon tape onto the threads of the elbow. Install the elbow and tighten to the correct torque value. Make sure that the tape does not cover or enter the orifice.

27. Install the air filter into the adapter and tighten to 20 to 25 in.-lbs. [2.2 to 3.0 N•m] torque.

28. Install the actuator to the cam follower housing.

    a. Rotate the cam follower shaft clockwise as far as possible. Use the 3376027 Cam Follower Shaft Positioning Tool to rotate the shaft.

    b. Lubricate the O-ring on the actuator shaft guide with clean engine lubricating oil.

    c. Install the actuator shaft through the shaft guide bore in the housing until the O-ring is in position in the bore.

Note: If the actuator shaft does not engage with the gear, use the 3376027 to rotate the cam follower shaft until the teeth engage.

    d. Use four capscrews and lockwashers to fasten the actuator to the cam follower housing. Tighten the capscrews to 15 to 19 ft.-lbs. [20 to 26 N•m] torque. The solenoid must be in the position shown in Fig. 4-42.

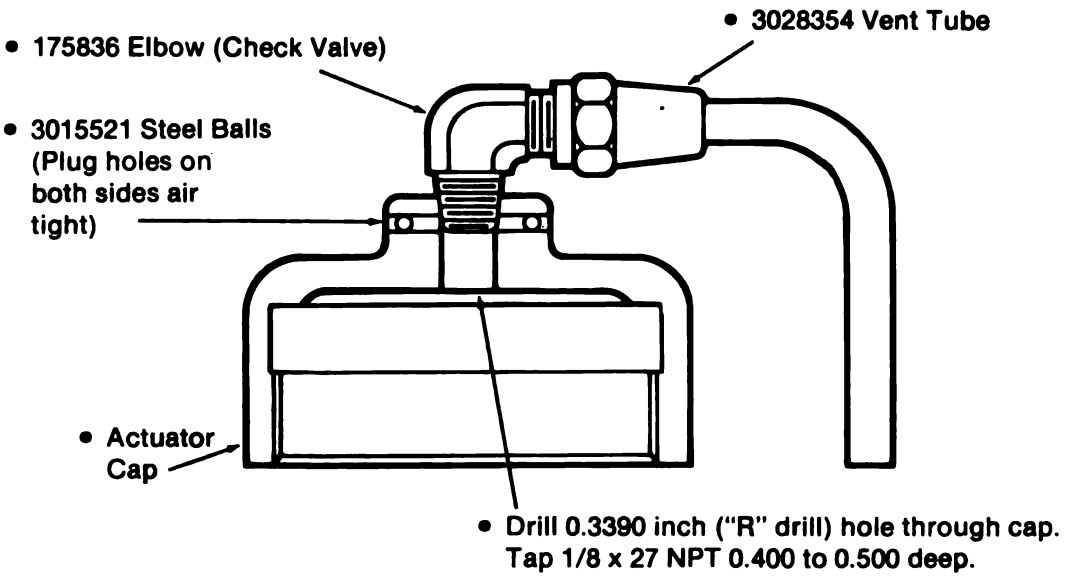

Fig. 4-42. Part No. 3028355 MVT Kit (Actuator Cap)

Digitized by Google

Note: Install the capscrew with the cross-drilled head into the hole farthest from the gasket surface of the cam follower housing.

e. Tighten the actuator shaft retaining capscrew to 40 to 45 ft.-lbs. [54 to 61 N•m] torque.

29. Install the Part No. 175836 Check Valve, the Part No. 3028354 Vent Tube and the Part No. 3015521 Steel Balls (2) from the MVT Kit into the actuator cap.

a. Drill a hole through the center of the actuator cap as shown in Fig. 4-42. Use a 0.339 in. diameter ("R" drill) drill bit to drill the hole. Tap the hole with a 1/8 × 27 NPT tap. Tap the hole to a depth of 0.400 to 0.500 inch [10.2 to 12.7 mm] as measured from the top of the cap.

b. Enlarge the 1/8 inch diameter lockwire holes that are in the top of the cap to a diameter of 0.1850 inch. Use a No. 13 drill bit to enlarge the holes. Drill from each side of the cap to a minimum depth of 0.1875 inch [4.76 mm] for each hole, Fig. 4-42.

c. Clean the cap to remove the metal particles and oil.

d. Install one Part No. 3015521 Steel Ball into the enlarged hole on each side of the actuator cap, Fig. 4-42.

e. Install the Part No. 175836 Check Valve into the actuator cap, Fig. 4-42. Tighten the check valve to 10 in.-lbs. [1.1 N•m] torque. The outlet on the check valve must position so that the vent tube will not be against any part of the engine.

f. Install the Part No. 3028354 vent tube onto the check valve, Fig. 4-42.

g. Install the copper washer, jam nut, second copper washer and actuator cap onto the spring retainer. Do not tighten.

Push Rods

Each cylinder of the engine requires an intake, exhaust and injector pushrod. The injector push rod is the largest of the three and fits into the middle socket of the cam follower assembly. When the engine has compression release, the exhaust push rod is equipped with a collar. When the compression release is actuated, the collar permits the push rod to be raised which opens the exhaust valve. On engines without a compression release, the exhaust push rod does not have a collar. The intake and exhaust pushrods are identical.

Clean and Inspect the Push Rods

1. Clean the push rods with mineral spirits or cleaning solvent.

2. Use a radius gauge to check the ball end of the push rods, Fig. 4-43. The radius of the ball end must be 0.619 to 0.625 inch [15.12 to 15.88 mm]. Replace the push rod if the ball is damaged or measures less than 0.619 inch [15.72 mm].

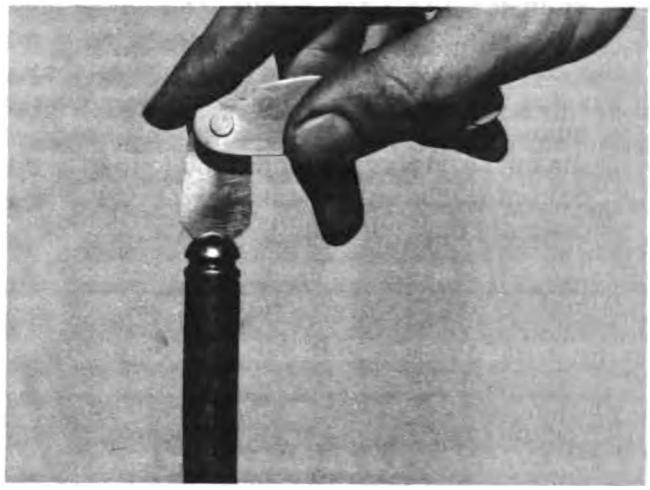

Fig. 4-43 (N20309). Check The Ball End Of The Push Rods.

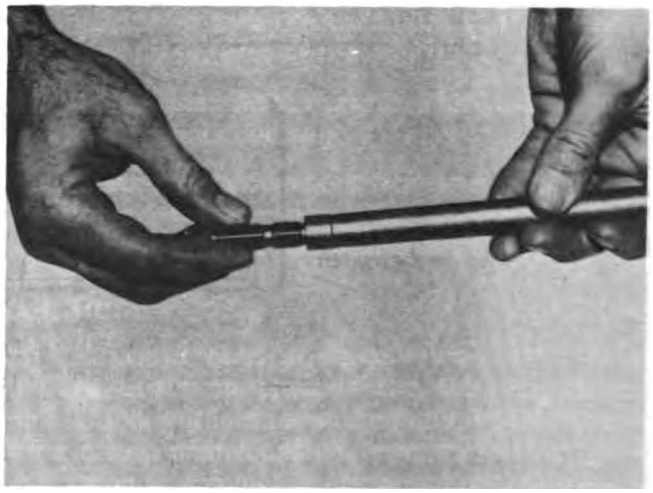

Fig. 4-44 (N20310). Check The Socket End Of The Push Rods.

Digitized by Google

3. Use the ball end of a new rocker lever adjusting screw to check the socket of the push rods, Fig. 4-44. A 0.500 inch [12.70 mm] diameter checking ball can be used to check the socket. Apply a coat of prussian blue compound to the checking ball or adjusting screw. Put the ball or screw into the push rod socket and rotate the ball or screw 180 degrees. Replace the push rod if the socket is damaged or has less than 80 percent contact with the ball.
4. Check that the push rod is not out-of-round. Replace the push rod if it is out-of-round more than 0.035 inch [0.89 mm].
5. Never use push rods with worn balls in cam followers with new sockets.

Table 3: Push Rod Length — Inch [mm]

	2 Inch Cam	2-1/2 Inch Cam
Injector	18.290 [464.57]	17.775 [451.49]
	18.320 [465.32]	17.805 [452.25]
Valve	18.360 [466.34]	17.880 [454.15]
	18.390 [467.11]	17.910 [454.91]

Digitized by Google

Digitized by Google

Group 5

The PT fuel system is used exclusively on Cummins Diesels. It was developed by Cummins Engine Company. The identifying letters "PT" are an abbreviation for pump functions of supplying fuel pressure at the proper time "pressure-time."

Fuel System

PT Fuel Pumps

Three models of PT fuel pumps are used: The PT (type G), PT (type R) and PT (type G) AFC. The PT (type G) indicates that fuel pressure regulation is a part of the governor function. The PT (type R) refers to fuel pressure regulation as a function of a regulator assembly. The PT (type G) AFC fuel pump indicates that the air fuel control is an integral part of the fuel pump.

1. Repair of PT (type G and H) pumps and calibration instructions is described in Bulletin No. 3379084 or revisions.
2. Bulletin No. 3379101 covers calibration and rebuilding of the PT (type R) pumps as used on Cummins engines.
3. Bulletin No. 3379068 covers calibration specifications of the PT (type G) pumps as used on Cummins engines.
4. For Air Fuel Control, aneroid adjustment and calibration refer to fuel pump Calibration manuals.
5. The CPL (Control Parts List) Manual, Bulletin No. 3379133, is a listing of basic engine parts and timing specifications which are necessary to produce a given engine performance. By reference to CPL numbers stamped on engine nameplate, this list may be used to identify parts within an engine. These parts then determine whether a fuel pump calibration is suitable for that engine.

Digitized by Google

Digitized by Google

Group 6

This group covers injectors, tubing and connections which carry fuel to and from injectors.

Injectors

Injectors and Connections

PT injectors and connections are described, with all repair and calibration information covered, in Bulletin No. 3379071 or reprints thereof.

Manuals on all Cummins products may be purchased through a Cummins Distributor.

Digitized by Google

Digitized by Google

Group 7

This section includes the disassembly, inspection, repair and assembly of the: oil pump, pressure regulator, oil cooler, filter, oil pan and dipstick.

Lubricating System

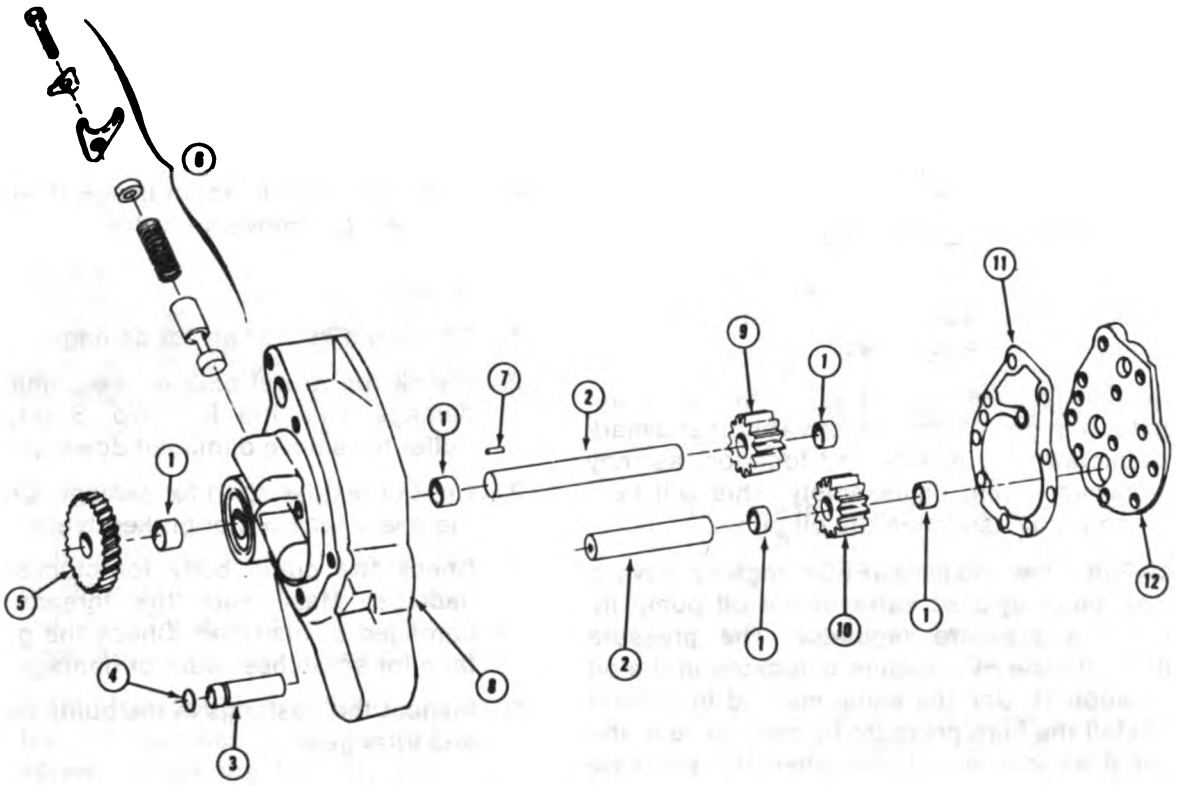

1. Bushing
2. Shaft
3. Tube
4. "O" Ring
5. Main Drive Gear
6. Pressure Regulator
7. Dowel
8. Body
9. Driven Gear
10. Idler Gear
11. Gasket
12. Cover

Fig. 7-0. Lubricating Oil Pump — Exploded View.

Digitized by Google

Service Tool List

Service Tools (Or Equivalent) Required	
Service Tool Number	**Tool Name**
ST-994	Bushing Mandrel
ST-1157	Spacer Mandrel
ST-1158	Bushing Mandrel
3376011	DFC Pressure Valve Fixture
3375206	Boring Tool

Desirable (Or Equivalent) Service Tools	
ST-1134	Dowel Pin Extractor
ST-1160	Hose Assembly Tool Kit
ST-1218	Mandrel (O-ring)
ST-1223	Mandrel (O-ring)
3375082	Gear Puller
3375083	Gear Puller
3375253	Tube Bundle Tester
3375049	Oil Filter Wrench
3375301	Tube Cutter

The Lubricating Oil Pump

The same general methods are used to disassemble, inspect and assemble the lubricating oil pumps for the NH and NT engines.

Put a mark on the parts such as the pressure regulator plunger, idler shaft, drive shaft and mark the capscrew length, size and location, as they are removed during disassembly. This will help you to correctly assemble the oil pump.

Note: Full Flow Cooling (FFC) engines have a high pressure by-pass valve in the oil pump instead of a pressure regulator. The pressure regulator for the FFC engine is located in the oil cooler support. Use the same method to remove and install the high pressure by-pass valve in the oil pump as you would use when the pressure regulator is located in the oil pump. Check the parts catalog to find the correct part number of the spring for the by-pass valve and the pressure regulator.

Disassembly

1. Refer to Fig. 7-0. Remove the capscrews and lockwashers that hold the cover to the pump body. Remove the cover. Hit the cover lightly with a rubber hammer to help remove the cover from the dowels in the body.
2. Remove the idler gear from the idler shaft. Remove the driven gear from the drive shaft and gear. Use the Part No. 3375082 Gear Puller to remove the part no. 143190 drive gear. Use the Part No. 3375083 Gear Puller to remove the part no. 125988 drive gear.

Note: Some double lubricating oil pumps have a scavenger pump body that must be removed after the drive shaft is pushed through the driven gear. After removing the scavenger pump body, repeat step 2.

3. If the oil pump has a tube for piston cooling and the tube is damaged, push the tube from the inside part of the pump body to remove it.
4. Push the idler shaft from the pump body.
5. Remove the cap, spring and plunger for the pressure regulator or pressure by-pass valve. Make sure the plunger can move freely in the bore.
6. If the mounting head for the oil filter has a by-pass valve, remove the valve.

Inspection

1. Check the idler shaft for damage.
2. Check the dowel pins in the pump body for damage. Use the Part No. ST-1134 Dowel Puller to remove damaged dowel pins.
3. Check the drive shaft for damage. Check all of the gears for worn or broken teeth.
4. Check the pump body for cracks or other damage. Make sure the threads are not damaged or distorted. Check the gasket surface for scratches, wear or damage.
5. Inspect the bushings in the pump body, cover and idler gear.

Replacement

1. Replace all parts that are damaged or worn beyond the limits in Table 1.

Repair

1. Follow these instructions to replace the bushings.
   a. Use the Part No. ST-1158 Bushing Mandrel to push the worn or damaged bushing from the body, cover or gear.

Digitized by Google

b. Use the ST-1158 to push new bushings into the body, cover or gear. The bushings must be even with or 0.020 inch [0.51 mm] below the surface of the body, cover or gear.

c. Use the Part No. 3375206 Lubricating Oil Pump Boring Tool to cut the bore in the bushings in the pump body.

1) Install the guide bushing into the gear pocket, Fig. 7-1. Tighten the capscrew against the side of the gear pocket to hold the guide bushing in position.

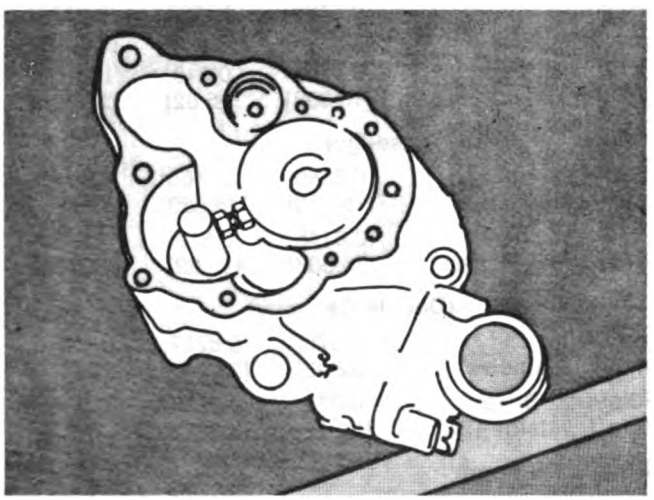

Fig. 7-1. Install The Guide Bushing Into The Gear Pocket.

2) Install the dial indicator into the setting block. Put the setting block on the setting standard with the indicator tip on the diameter size of the bore to be cut. See Table 1 for the correct size bore. Adjust the dial indicator.

3) Install the tool bit into the boring bar. Do not completely tighten the setscrew. Install the tool bit adjusting knob into the boring bar. Hold the setting block and indicator against the boring bar so the indicator tip will be over the tool bit. Turn the adjusting knob clockwise to push the tool bit against the indicator tip. Adjust the tool bit until the indicator has the same reading as when adjusted on the setting standard. After the tool bit is correctly adjusted, tighten the setscrew and remove the adjusting knob.

4) Install the boring tool into the guide bushing. The tool bit must go through the slot in the guide bushing. Do not hit the tool bit against the bushing.

5) Adjust the travel of the boring bar so the tool bit will go through the guide bushing but does not touch the bushing in the pump body.

6) Fasten the boring tool to the pump body with capscrews, Fig. 7-2. Rotate the shaft to make sure it will turn freely.

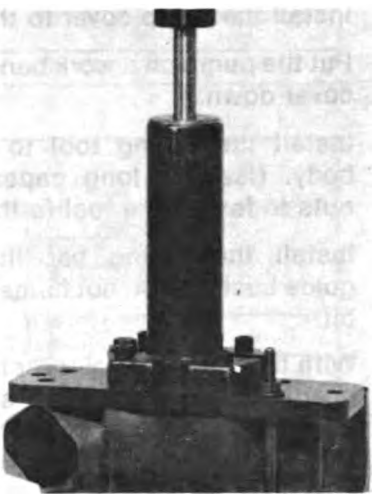

Fig. 7-2. Install The Boring Tool.

7) Move the feed control lever to the "on" position. This will prevent the drive shaft from moving down. Put the pump and boring tool in a vertical position. Make sure the boring tool can cut completely through the bushing.

8) Install the drive adapter into a heavy duty 3/8 inch electric drill. Engage the adapter with the drive shaft of the boring tool.

9) Start the drill and cut the bore in the bushings. Make sure you cut the bore in both bushings. Do not push down on the drill. The feed mechanism in the boring tool will move the boring bar.

10) Stop the drill. Move the feed control lever to the "off" position. Pull up on the drive shaft to remove the tool bit from the bore.

Digitized by Google

11) Remove the boring tool from the pump body. Make sure the tool bit moves through the slot in the guide bushing. Do not hit the tool bit against the guide bushing.

12) Remove the guide bushing. Clean the metal particles from the pump body.

13) Measure the bore in the bushings.

d. Cut the bore in the bushings that are in the cover.

1) Repeat Steps 1) through 3) for the bushings in the body.

2) Install the pump cover to the body.

3) Put the pump on a work bench with the cover down.

4) Install the boring tool to the pump body. Use the long capscrews and nuts to fasten the tool to the body.

5) Install the boring bar through the guide bushing. Do not damage the tool bit.

6) With the feed control lever in the "off" position, move the drive shaft down until the tool bit touches the bushing in the cover.

7) Hold a new bushing and a 1/16 inch [1.59 mm] feeler gauge against the drive shaft, at the top of the boring tool body. Move the stop collar down against the feeler gauge. Tighten the set screw in the stop collar. Move the feed lever to the "on" position and remove the feeler gauge and bushing.

8) Start the drill and cut the bore in the bushing.

9) Stop the drill when the stop collar on the drive shaft is against the body of the boring tool.

10) Move the feed control lever to the "off" position.

11) Pull the drive shaft up to remove the tool bit from the bushing. Move the lever to the "on" position.

12) Remove the boring tool from the pump body. Do not damage the tool bit.

13) Remove the cover from the body.

14) Remove the guide bushing. Clean all metal particles from the body and cover.

15) Measure the inside diameter of the bushing.

Table 1: Oil Pump Specifications (Except DFC*) — inch [mm]

	Worn Limit	New Minimum	New Maximum
Single Oil Pump			
Bushing Inside Diameter	0.6185 [15.710]	0.6165 [15.659]	0.6175 [15.684]
Idler and Drive Shaft Outside Dia.	0.6145 [15.608]	0.615 [15.62]	0.6155 [15.634]
Single Oil Pump (Scavenge)			
Bushing Inside Diameter	0.6185 [15.710]	0.6165 [15.659]	0.6175 [15.684]
Idler and Drive Shaft Outside Dia.	0.6145 [15.608]	0.615 [15.62]	0.6155 [15.634]
Single Oil Pump (Double Capacity)			
Bushing Inside Diameter	0.879 [22.33]	0.8767 [22.268]	0.8777 [22.293]
Idler and Drive Shaft Outside Dia.	0.874 [22.17]	0.8745 [22.212]	0.875 [22.22]
Double Oil Pump			
Bushing Inside Diameter	0.6185 [15.710]	0.6165 [15.659]	0.6175 [15.684]
Idler and Drive Shaft Outside Dia.	0.6145 [15.608]	0.615 [15.62]	0.6155 [15.634]
Double Oil Pump (Scavenge)			
Bushing Inside Diameter	0.841 [21.36]	0.840 [21.34]	0.8405 [21.349]
Idler and Drive Shaft Outside Dia.	0.838 [21.26]	0.8375 [21.272]	0.838 [21.29]

*See Page 7-9 for DFC Specifications.

Assemble the Oil Pump

1. Apply a coat of lubricating oil to the large outside diameter of the idler shaft. Install the large outside diameter of the shaft, from the gear pocket side of the body, into the bore in the pump body. Use the Part No. ST-1157 Gear and Spacer Mandrel and an arbor press to push the shaft into the bore. See Table 2 to find the correct amount of protrusion the idler shaft must have after it is installed in the pump body.

Digitized by Google

Table 2: Oil Pump Specifications (Except DFC*) — inch [mm]

	Minimum	Maximum
Single Oil Pump		
Drive Shaft Protrusion ①	0.855 [21.72]	0.875 [22.22]
Idler Shaft Protrusion ②	0.720 [18.29]	0.740 [18.80]
Drive Shaft End ③ Movement	0.002 [0.05]	0.005 [0.13]
Single Oil Pump (Double Capacity)		
Drive Shaft Protrusion ①	1.035 [26.29]	1.055 [26.80]
Idler Shaft Protrusion ②	0.955 [24.26]	0.985 [25.02]
Drive Shaft End ③ Movement	0.002 [0.05]	0.008 [0.20]

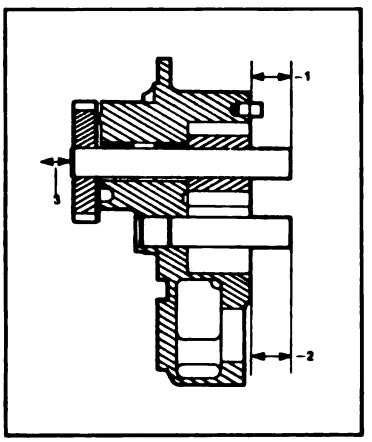

	Minimum	Maximum
Double Oil Pump		
Drive Shaft Protrusion ①	0.040 [1.02]	0.060 [1.52]
Idler Shaft Protrusion ②	2.600 [66.04]	2.620 [66.55]
Idler Shaft Protrusion ② *(When Part No. is followed by the letter "L")*	2.680 [68.07]	2.690 [68.33]
Drive Shaft End ③ Movement	0.004 [0.10]	0.007 [0.18]

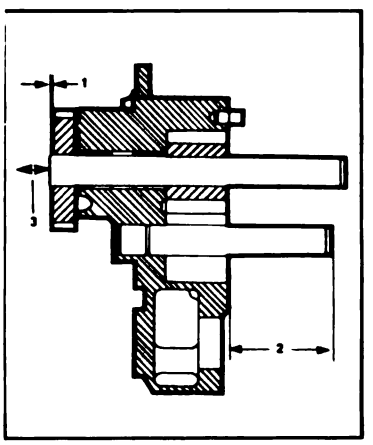

	Minimum	Maximum
Single Scavenger and Double Scavenger Pump		
Drive Shaft Protrusion ①	0.580 [14.73]	0.610 [15.49]
Drive Shaft Protrusion ② From Adapter	0.050 [1.27]	0.070 [1.78]
Idler Shaft Protrusion ③	(Even with front surface of the pump)	
Dowel Pin Protrusion ④ From Adapter	0.990 [25.15]	1.010 [25.65]
Drive Shaft End Movement		
Single	0.004 [0.10]	0.010 [0.25]
Double	0.004 [0.10]	0.007 [0.18]

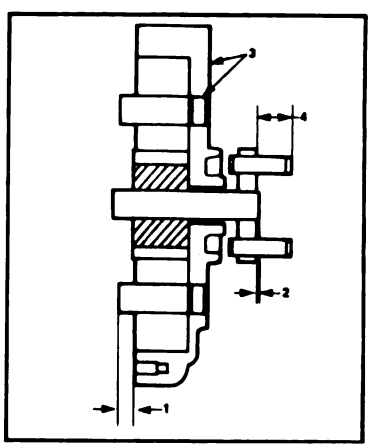

*See Page 7-10 for DFC Specifications.

Digitized by Google

2. Apply a coat of lubricating oil to the inside diameter of the driven gear. Install the gear on to the drive shaft. Use the ST-1157 and an arbor press to push the gear onto the shaft. See Table 2 to find the correct amount of protrusion the shaft must have after the gear is installed.

3. Install the drive shaft, from the gear pocket side of the pump body, into the bore in the pump body. Apply a coat of lubricating oil to the inside diameter of the drive gear. Put the gear on the shaft on the side of the body opposite to the gear pockets, use an arbor press to push the gear onto the shaft. There must not be more than 0.012 inch [0.30 mm] clearance between the gear and the body.

4. Apply lubricating oil to the inside diameter of the idler gear. Install the idler gear onto the idler shaft.

Note: For double lubricating oil pumps, install a new gasket and the scavenger pump body to the oil pump body. Apply lubricating oil to the inside diameter of the driven gear for the scavenge pump. Use an arbor press to push the gear onto the drive shaft. There must be 0.002 to 0.004 inch [0.05 to 0.10 mm] clearance from the bottom of the gear pocket to the gear. Repeat Step 4 to install the idler gear.

5. If the oil pump requires a tube for the piston cooling oil and the tube was removed, install a new tube into the body. Push the end of the tube which is not beveled into the pump body. Make sure the tube has 2.970 to 3.000 inch [75.44 to 76.20 mm] protrusion from the body.

6. If the dowels were removed from the body, install new dowels.

7. Apply clean lubricating oil to the gears, bushings and shafts.

8. Install the pressure regulator or pressure bypass valve into the pump body. Tighten the capscrew to 30 to 35 ft.-lbs. [40 to 47 N•m] torque.

9. Install the cover and a new gasket to the pump body. Hit the cover lightly with a rubber hammer to push the cover onto the dowels. Install the capscrews and lockwashers so that the cover is held to the body. Tighten the capscrews to 30 to 35 ft.-lbs. [40 to 47 N•m] torque. Turn the gears to make sure they move freely in the pump.

10. If the pipe plugs were removed, apply a sealing compound or teflon tape to the threads. Install and tighten the plugs to the following torque values.

    1/2 inch pipe plug 30 to 40 ft.-lbs. [40 to 54 N•m]
    3/8 inch pipe plug 20 to 30 ft.-lbs. [27 to 40 N•m]
    3/4 inch pipe plug 45 to 55 ft.-lbs. [61 to 74 N•m]

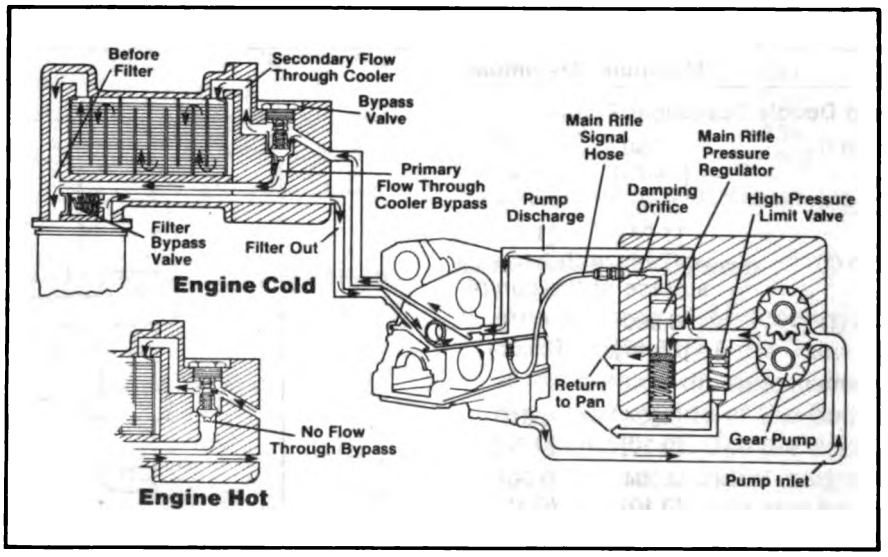

Fig. 7-3. Demand Flow and Cooling (DFC) Oil Flow Schematic.

Digitized by Google

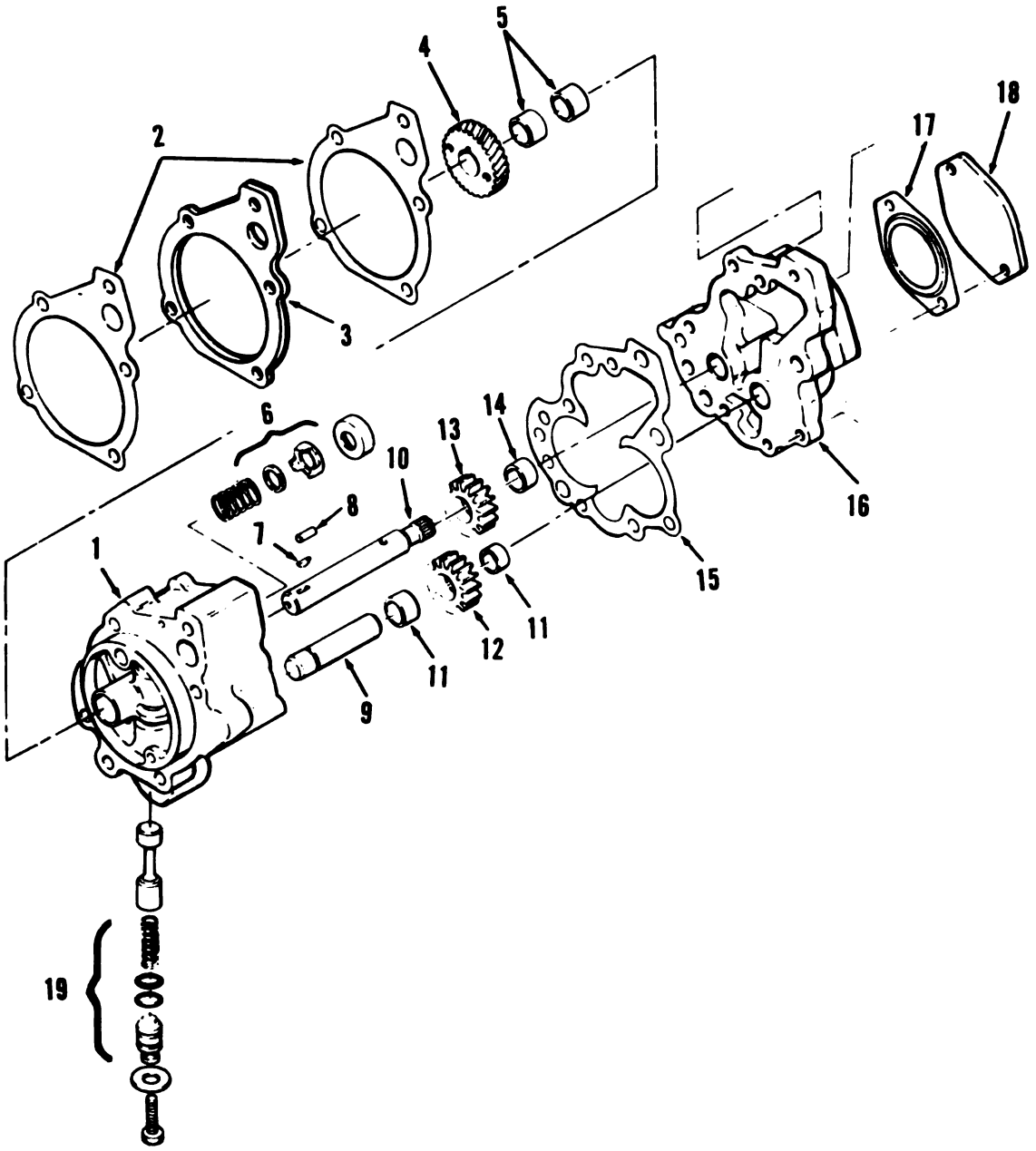

1. Body
2. Gasket
3. Spacer
4. Drive Gear
5. Bushing
6. High Pressure Limit Valve
7. Drive Shaft Key
8. Dowel Pin
9. Idler Shaft
10. Drive Shaft
11. Gear Bushing
12. Idler Gear
13. Driven Gear
14. Bushing
15. Gasket
16. Oil Pump Cover
17. Cover Plate Gasket
18. Cover Plate
19. Main Rifle Pressure Regulator

Fig. 7-4. Demand Flow and Cooling (DFC) Oil Pump — Exploded View

Digitized by Google

Demand Flow and Cooling

The Demand Flow and Cooling (DFC) lubricating system adjusts the oil flow and oil cooling as needed by the engine, instead of operating continuously at maximum capacity. The DFC system has a lower pressure in main oil passage (main oil rifle), 35 to 45 psi [241 to 310 kPa], less oil flow from the pump, 40 GPM [151.4 LPM], and controls the amount of oil that is cooled before it enters the engine oil passages.

The flow is controlled through two independent circuits. One circuit is a lower flow capacity oil pump that has an internal pressure control mechanism and external feedback signal hose. The second circuit contains a temperature-controlled bypass in the oil cooler assembly, Fig. 7-3. Instructions for the disassembly, inspection and assembly of the oil cooler assembly are found later in this section.

Disassemble and Inspect the Oil Pump

1. Follow the same general instructions given to disassemble the other oil pumps.
2. Check the drive shaft and idler shaft for damage or wear, Fig. 7-5 and 7-6. Replace the shaft if the outside diameter does not measure 0.8745 to 0.8750 inch [22.21 to 22.22 mm] or if it is damaged.
3. Inspect the bushings in the pump body, cover and idler gear, Fig. 7-7. Replace the bushings if they are damaged or the inside diameter

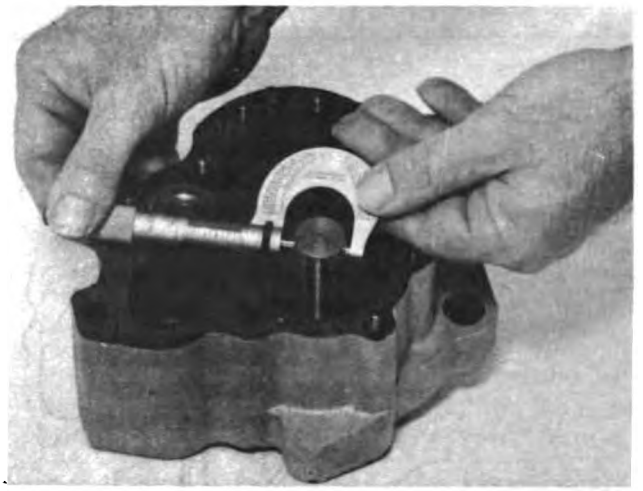

Fig. 7-6. Measure The Outside Diameter Of The Idler Shaft.

Fig. 7-7. Measure The Inside Diameter Of The Bushings.

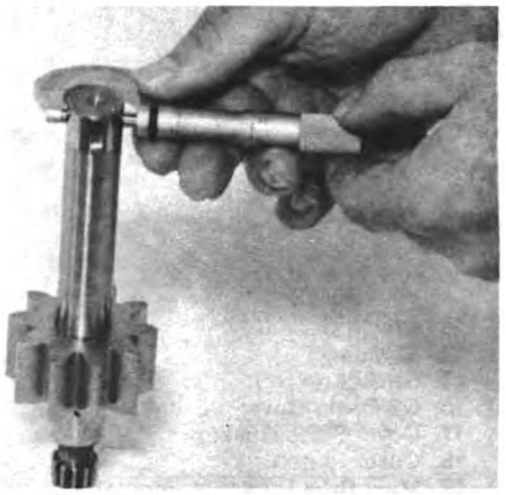

Fig. 7-5. Measure The Outside Diameter Of The Drive Shaft.

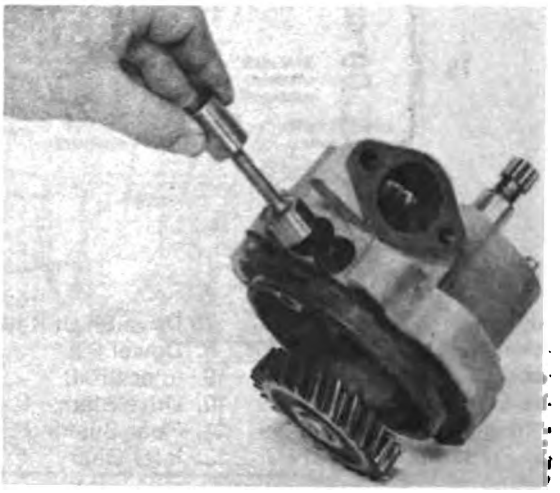

Fig. 7-8. Check The Movement Of The Plunger In The Bore.

Digitized by Google

does not measure 0.8765 to 0.8775 inch [22.26 to 22.29 mm].

4. Inspect the gears for worn or broken teeth. Replace the gears that are worn or damaged.
5. Check the pump body and cover for cracks or other damage. Make sure the surfaces for the gaskets are flat and smooth. Replace the parts that are damaged.
6. Remove the pressure regulator retainer, spring and plunger. Make sure the plunger can move freely in the bore, Fig. 7-8.
7. Check the disc for the high pressure limit valve for damage. Push on the disc to check the spring for damage. Do not use a tool that has a sharp point to push on the disc. Remove the retainer plug, disc and washer to replace the spring if it is weak, damaged or broken.
8. Follow the instructions given earlier in Step 11a, b and c to install and bore the new bushings in the pump body and cover. See Table 3 to find the correct dimensions of the bushing and shaft.

Table 3: DFC Oil Pump Specifications — Inch [mm]

	Worn Limit	New Minimum	New Maximum
Bushing Inside Diameter	0.8785 [22.31]	0.8765 [22.26]	0.8775 [22.29]
Idler and Drive Shaft Outside Dia.	0.8740 [22.20]	0.8745 [22.21]	0.8750 [22.22]

Assemble the Oil Pump

Except for its unique parts the DFC oil pump requires the same procedure, tools and torque values for assembly as the other oil pumps. See Table 4 to find the correct amount of protrusion the idler and drive shafts must have after assembly. Special instructions for assembly of the DFC oil pumps are as follows:

1. Install the high pressure limit valve into the pump body.
   a. Use the Part No. 3376011 pressure valve fixture to install the pressure valve.
   b. Use capscrews and lockwashers to install the locating plate to the pump body. Do not tighten the capscrews at this time.

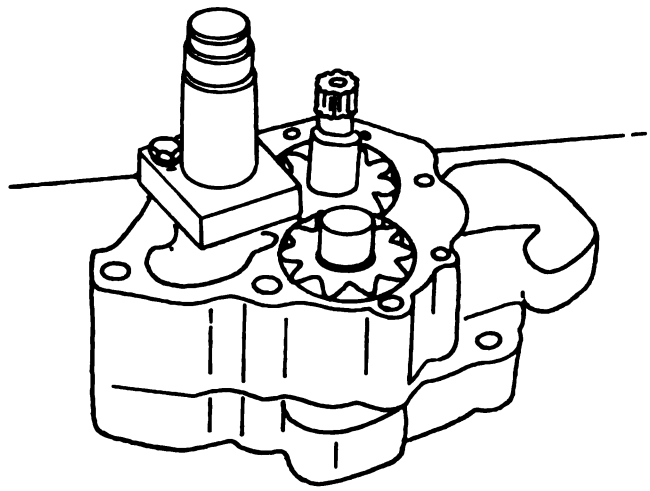

Fig. 7-9. Position The Locating Plate.

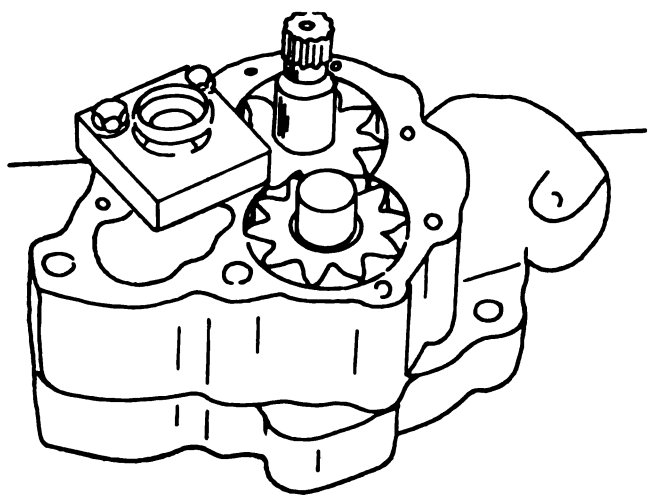

Fig. 7-10. Position The Assembly Into The Locating Plate.

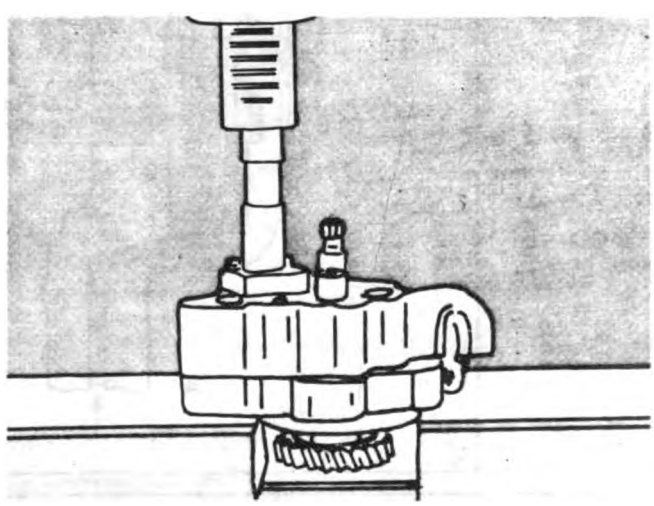

Fig. 7-11. Install The Assembly.

Digitized by Google

c. Install the large diameter end of the mandrel into the locating plate to put the plate in the correct position on the body, Fig. 7-9. Tighten the capscrews and then remove the mandrel.

d. Make sure the prongs of the disc are down and the lip of the seat is up when you install the bypass spring, washer, disc into the locating plate, Fig. 7-10.

e. Install the small diameter end of the mandrel into the locating plate. Push on the mandrel with an arbor press until the large end of the mandrel is against the locating plate, Fig. 7-11.

Table 4: DFC Shaft Protrusion — inch [mm]

	Minimum	Maximum
Idler Shaft	0.705 [17.9]	0.735 [18.6]
Drive Shaft		
from Pump Body	1.990 [50.5]	2.010 [51.0]
from Pump Drive Gear	0.050 [1.27]	0.070 [1.79]

f. Remove the mandrel and locating plate from the pump body.

NTE Lubricating Oil Pump (European Big Cam Engine)

Use the same procedures to disassemble, inspect and assemble the NTE oil pump as are used for the other NH/NT oil pumps. The difference between the NTE oil pump and the other pumps is the type and location of the oil pressure regulator and the amount of protrusion of the idler and drive shaft.

The pressure regulator is a checkball valve and is located in the front part of the pump body. It is operated by oil pressure from the pump and oil pressure from the main oil passage (oil rifle) of the engine. Fig. 7-12 (A) shows the position of the regulator when the engine is first started and the oil temperature is less than its normal operating temperature. Fig. 7-12 (B) shows the position of the regulator when the oil temperature is at normal operating temperature.

The regulator keeps the oil pressure in the engine at a minimum of 10 psi [69 kPa] when the engine is

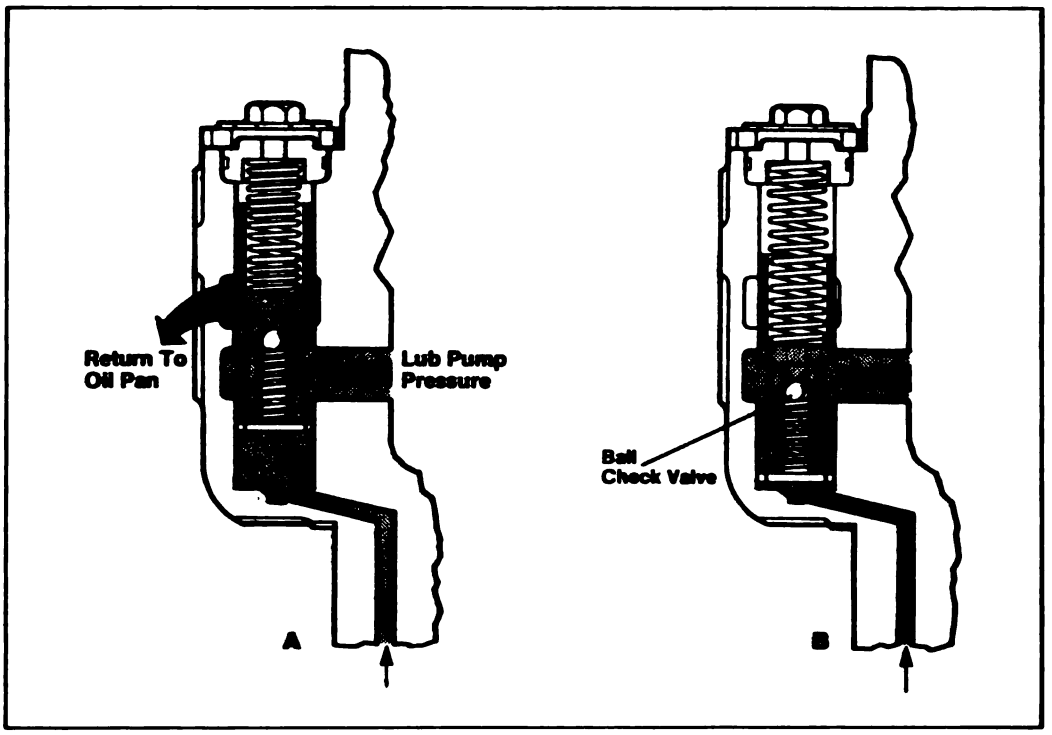

Fig. 7-12. NTE Oil Pump Pressure Regulator.

Digitized by Google

at idle RPM and 40 to 45 psi [275 to 310 kPa] at rated RPM. See Table 5 to find the corect size of the bushings and amount of shaft protrusion.

Table 5: NTE Oil Pump Specifications — Inch [mm]

	Worn Limit	New Minimum	New Maximum
Bushing Inside Diameter	0.8785 [22.31]	0.8765 [22.26]	0.8775 [22.28]
Idler and Drive Shaft Outside Dia.	0.8740 [22.17]	0.8745 [22.21]	0.8750 [22.22]
Idler Shaft Protrusion		0.955 [24.25]	0.985 [25.02]
Drive Shaft Protrusion		2.305 [58.54]	2.325 [59.05]

Lubricating Oil Filters

Full-Flow Oil Filter (Center-Bolt)

Disassembly

1. Remove the drain plug from the filter shell to drain the oil. Clean the dirt from around the filter head and shell before you remove the shell.
2. Remove the center-bolt from the shell. Remove the shell, element and seal ring from the filter head. Keep the element for inspection and discard the seal ring.
3. Remove the retaining ring from the center-bolt.
4. Remove the filter support, rubber seal, washer and filter spring from the filter shell. Remove the center-bolt and copper washer.
5. Check the bypass valve in the filter head to make sure the valve works freely. If the valve does not work freely, remove and replace the valve.

Cleaning

Clean the filter shell and parts with cleaning solvent and dry with compressed air.

Inspection

1. Use a knife to cut the element. Remove the element from the center spool.
2. Inspect the element for metal particles and dirt, Fig. 7-13. If metal particles are found in the element, be sure to inspect all bearings in the engine. Discard the element after inspection.

Fig. 7-13 (V40727). Inspect The Paper Element.

3. Inspect all parts for wear, damage or distortion. Discard the parts that are damaged, worn or distorted.

Replacement

1. Replace the element with a new element.
2. Replace all the parts that were discarded with new parts.

Assembly

1. If the bypass valve was removed, install the new valve into the filter head.
2. Install a new copper washer onto the center-bolt.
3. Install the center-bolt into the filter shell. Slide the spring, washer, a new rubber seal and the filter support onto the center-bolt. Install the retaining ring onto the center-bolt.
4. Install a new element into the filter shell.
5. Install a new seal ring to the filter head.
6. Install the filter assembly to the filter head. Install the drain plug into the filter shell.

Note: Use the parts catalog to find the correct part numbers.

Full Flow Oil Filter (Spin-On)

Disassembly

1. Use the Part No. 3375049 Oil Filter Wrench to remove the oil filter.

Digitized by Google

2. Remove the capscrew and lockwasher that fastens the spin-on adapter to the filter head. Remove the spin-on adapter and discard the O-ring.

Cleaning

Clean the spin-on adapter with cleaning solvent and dry with compressed air.

Inspection

1. Use the Part No. 3375301 Tube Cutter to remove the element from the filter cartridge.
2. Inspect the element for metal particles and dirt. If metal particles are found in the element, be sure to inspect all bearings in the engine. Discard the element after inspection.
3. Inspect the spin-on adapter for damage.

Assembly

1. Apply a coat of lubriplate to a new adapter O-ring. Install the spin-on adapter and O-ring to the filter head. Tighten the capscrews for the adapter to 25 to 35 ft.-lbs. [34 to 47 N•m] torque.
2. Apply a coat of lubricating oil to a new sealing ring and to the threads of a new filter cartridge.
3. Install the sealing ring and filter to the spin-on adapter. To tighten the filter, follow the instructions on the filter cartridge.

Bypass Oil Filter

Full-flow oil filters must always be used with bypass filters. Never use a bypass filter instead of a full-flow oil filter.

Disassembly

1. Remove the capscrews for the clamp ring. Remove the cover and O-ring.
2. Remove the element hold-down assembly and the element from the filter shell.

Cleaning

1. Use cleaning solvent to clean the hold-down assembly and filter shell. Dry with compressed air.
2. The tee-handle of the hold-down assembly or the stand-pipe in the filter shell will have an orifice. The orifice controls the oil flow through the filter. Make sure the orifice is clean.

Inspection

Check the hold-down assembly, filter shell and cover for damage.

Assembly

1. Install a new element into the filter shell.
2. Install the hold-down assembly onto the stand-pipe. Tighten the assembly.
3. Install the cover and O-ring on the filter shell.
4. Install the clamp ring to the cover and filter shell. Tighten the capscrews until the lugs on the clamp ring come together.

Lubricating Oil Lines

Hose Size and Specifictions

1. For oil supply and drain lines less than 10 ft. [3 m] in length, use a flexible hose size No. 6 (5/16 in. [7.9 mm] inside diameter).
2. For oil supply and drain lines more than 10 ft. [3 m] in length, use hose size No. 8 (13/32 in. [10.3 mm] inside diameter).
3. The fittings used in the oil bypass circuit must not be less than 1/4 in. pipe size.
4. The oil return line to the oil pan must be below the oil level in the oil pan.
5. The oil supply line must be connected to the oil circuit between the oil pump and full-flow filter.
6. Make sure the hose for the oil and fuel lines meet these specifications:
   a. The inside liner is made of rubber or teflon and has fabric and wire support.
   b. The outside of the hose has fabric or wire support.
   c. The hose cannot be damaged by oil or fuel.
7. The hose with the inside liner must have the ability to let oil flow at −40°F to 300°F [−40°

Digitized by Google

to 149 °C]. Do not use hoses that have the SAE specifications of 100R1 and 100R5.

8. A hose with a teflon liner must have the ability to let oil flow at up to 450 °F [232 °C]. The hose must have a stainless steel wire support for the liner. Permanent fittings are to be used.
9. Make sure the clamps used to hold the hose in position will not damage the hose.

To Assemble New Hoses

Replace the hose and fittings after either 100,000 to 200,000 miles [160,900 to 321,000 km] or 3200 to 6400 hours of engine operation.

Follow these instructions to make hose from bulk material.

1. Use a hacksaw to cut the hose to the correct length. Make the cut square or straight within 5 degrees.
2. Do not compress the hose while cutting. This can cause a restriction inside the hose.
3. Put the socket in a vise. Check all fittings to make sure they fit correctly.
4. Hold the hose so that it enters straight into the socket, Fig. 7-14. This will prevent a bad connection in the socket. Turn the hose counterclockwise while you push the hose into the socket.
5. Turn the hose until it comes in contact with the bottom of the socket. Make sure the hose has reached the bottom and is not pushing into the inside of the socket.
6. Put the socket and hose assembly in a vise. Make sure the socket is clamped in the vise. Apply lubrication to the nipple and the inside of the hose, Fig. 7-15.
7. Use the Part No. ST-1160 Lube Hose Assembly Tool to install the nipple into the hose and socket assembly, Fig. 7-16. The ST-1160 includes hose mandrels for the hose sizes 4, 5, 6, 8, 10, 12 and 16.
8. After assembly, check the inside of the fittings and the hose. Make sure the hose is not damaged. Any damage to the hose liner can stop the oil flow.

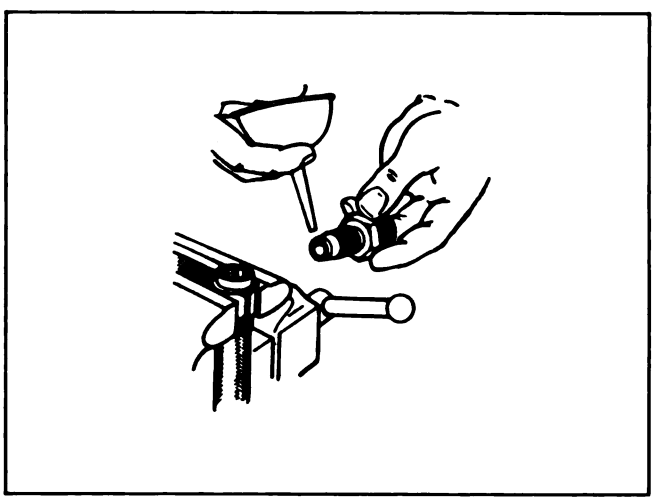

Fig. 7-15 (N10738). Lubricate The Nipple.

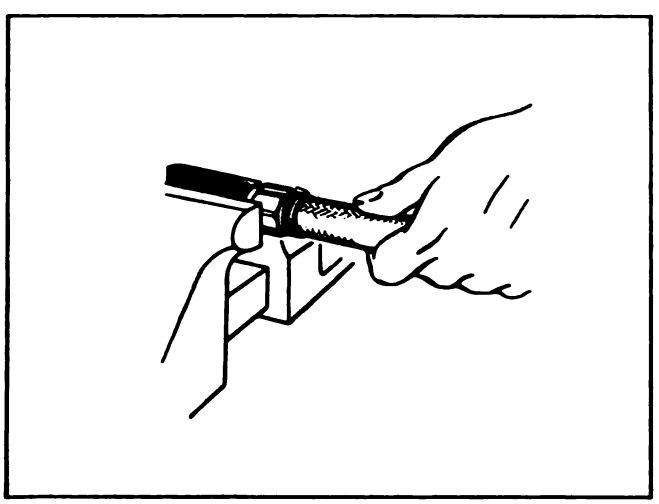

Fig. 7-14 (N10737). Install The Hose Into The Socket.

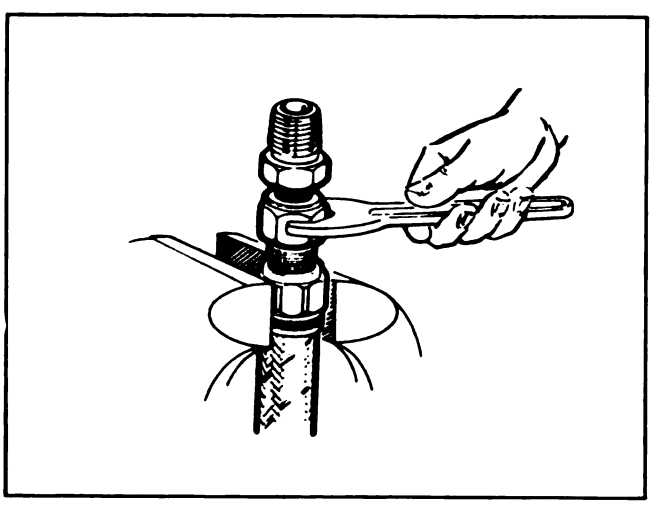

Fig. 7-16 (N10739). Assemble The Hose Nipple And Socket

Digitized by Google

The Lubricating Oil Pan

To select the correct oil pan, you must know the type of equipment the engine is to be used in. If the engine is used in an automotive vehicle, the oil pan must be designed for engine operation up to 10 degrees tilt or angularity. If used in construction equipment, the oil pan must be designed for operation up to 30 degrees tilt or angularity.

Use Table 7-5, in the back of this section, to find the specifications of the oil pan.

Inspection

1. Check the oil pan for cracks. Use the dye method to find cracks.
   a. Apply dye to the area of inspection. Let the dye dry for 15 minutes. Do not use compressed air.
   b. Apply the developer to the dye and check for indications of cracks.
2. Check the aluminum oil pans for damage to the thread inserts.

Repair

1. To replace damaged thread inserts:
   a. Measure the diameter of the hole. Use the correct tool from the Part No. 3375021 Thread Insert Kit to remove the damaged thread insert. Clean and inspect the hole. Use the same tool to install a new insert.
   b. Use different taps to start and to finish the threads in new or oversize holes for thread inserts. Use diesel fuel as a lubricant when you cut the thread in aluminum.
   c. After the new insert is installed, bend the bottom of the insert toward the center then toward the side of the hole. This will cause the tip of the insert to break. Remove the tip.
2. Weld any small cracks in the oil pan. Do not weld machined surfaces. Make sure that you clean all of the oil from the oil pan before welding.
3. Repair the damaged threads for the oil drain plug. Install an oversize drain plug in the oil pan.
   a. To use the Part No. 62117 Drain Plug with 1-1/4 inch X 12 thread size.
      1) Increase the diameter of the hole to 1-11/64 inch [29.77 mm].
      2) Use a 1-1/4 inch X 12 tap to cut the threads in the hole. Use diesel fuel as a lubricant as you cut the threads.
      3) Install the new drain plug and copper washer. Tighten the plug to 60 to 70 ft.-lbs. [81 to 95 N•m] torque.
   b. To use the Part No. 120349 Drain Plug with 1-3/8 inch X 12 thread size.
      1) Increase the diameter of the hole to 1-19/64 inch [32.94 mm].
      2) Use a 1-3/8 inch X 12 tap to cut the threads in the hole. Use diesel fuel as a lubricant as you cut the threads.
      3) Install the new drain plug and copper washer. Tighten the plug to 60 to 70 ft.-lbs. [81 to 95 N•m] torque.

The Lubricating Oil Dipstick

The dipstick has marks that show the level of the oil in the oil pan.

If the level of the oil is too high, this can cause foam in the oil and a loss of power. If the oil level is too low, this can cause a loss of oil pressure and damage to the engine.

If the dipstick is missing, install a new dipstick.

If the Part No. of the dipstick is not known, use a dipstick that does not have marks on it. Make the correct marks on the dipstick.

1. The engine must be mounted in the chassis and in the correct operating position.
2. Find the oil pan Part No. Refer to Table 7-5 to find the capacity of the oil pan.
3. Drain all of the oil from the oil pan.
4. Put enough oil into the oil pan to equal the low capacity shown in Table 7-5. Make sure the oil has enough time to drain from the engine into the pan.
5. Install the dipstick into the dipstick tube until the dipstick makes contact with the bottom of the pan. Measure the amount of protrusion from the tube to the bottom of the dipstick cap. Remove the dipstick. Cut the same

Digitized by Google

amount from the end of the dipstick that was measured from the tube to the cap.

6. Install the dipstick all of the way into the tube. Remove the dipstick and make a mark where the oil level shows on the dipstick. The mark must be 0.010 inch [0.3 mm] deep. Mark the letter "L" above the first mark. Do not use a chisel to make the mark. Cut the dipstick so it has at least 1/2 inch [12.7 mm] of length below the mark.

7. Add enough oil to the oil pan to equal the high capacity shown in Table 7-5. Install the dipstick into the tube. Remove the dipstick and make a mark where the oil level shows on the dipstick. Mark the letter "H" above this mark.

The Lubricating Oil Cooler

The FFC (Full Flow and Cooling) engine has the oil pressure regulator in the front support for the oil cooler, Fig. 7-17. The regulator controls the oil pressure before the oil flows through the oil filter. Use the same procedure to remove and install the regulator in the oil cooler that you used to remove and install the regulator in the oil pump.

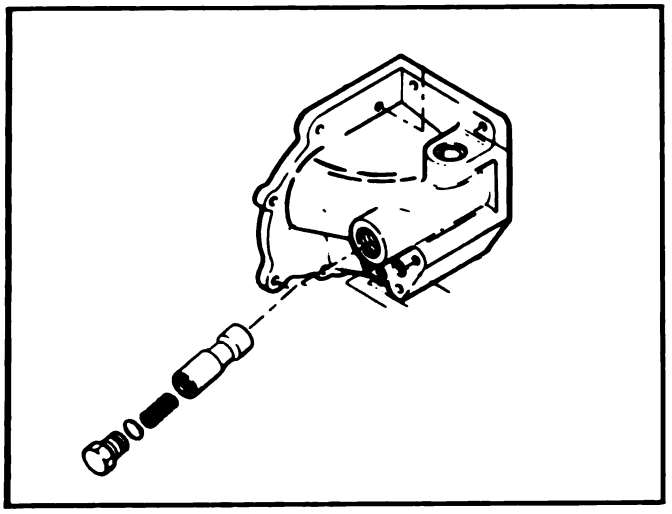

Fig. 7-17. The FFC Oil Pressure Regulator.

The oil cooler for the DFC (Demand Flow and Cooling) system has a bypass valve that controls the oil flow through the cooler, Fig. 7-18. The temperature of the oil causes the bypass valve to open and close. When the oil temperature is less than 230°F [110°C], the valve is in the closed position which allows approximately half of the oil flow through the cooler. When the oil temperature is more than 230°F [110°C], the valve is in the open position which allows the full flow of the oil through the cooler.

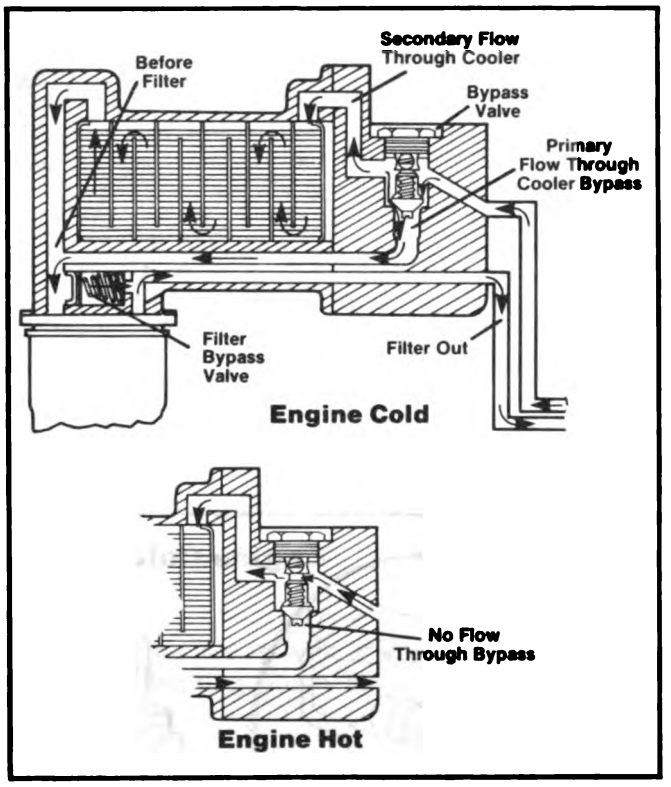

Fig. 7-18. The DFC Oil Bypass Valve.

The oil cooler for the NTE (European Big Cam) engine has a thermostat that controls the oil flow through the cooler, Fig. 7-19. When the engine and the oil is cold (oil temperature less than 215°F [96.1°C], the thermostat is in the closed position and the oil flow bypasses the oil cooler. As the oil becomes hotter (more than 215°F [96.1°C], the thermostat begins to open to allow a small amount of oil flow through the cooler. When the oil temperature reaches 235°F [112.7°C], the thermostat is fully open and allows the full flow of oil through the cooler.

Disassembly (FCC and Big Cam)

1. Remove the cooler support (8, Fig. 7-20) and cover (3) from the housing (1).
2. Remove and discard the gaskets (2 and 10) and retainers (4).

Digitized by Google

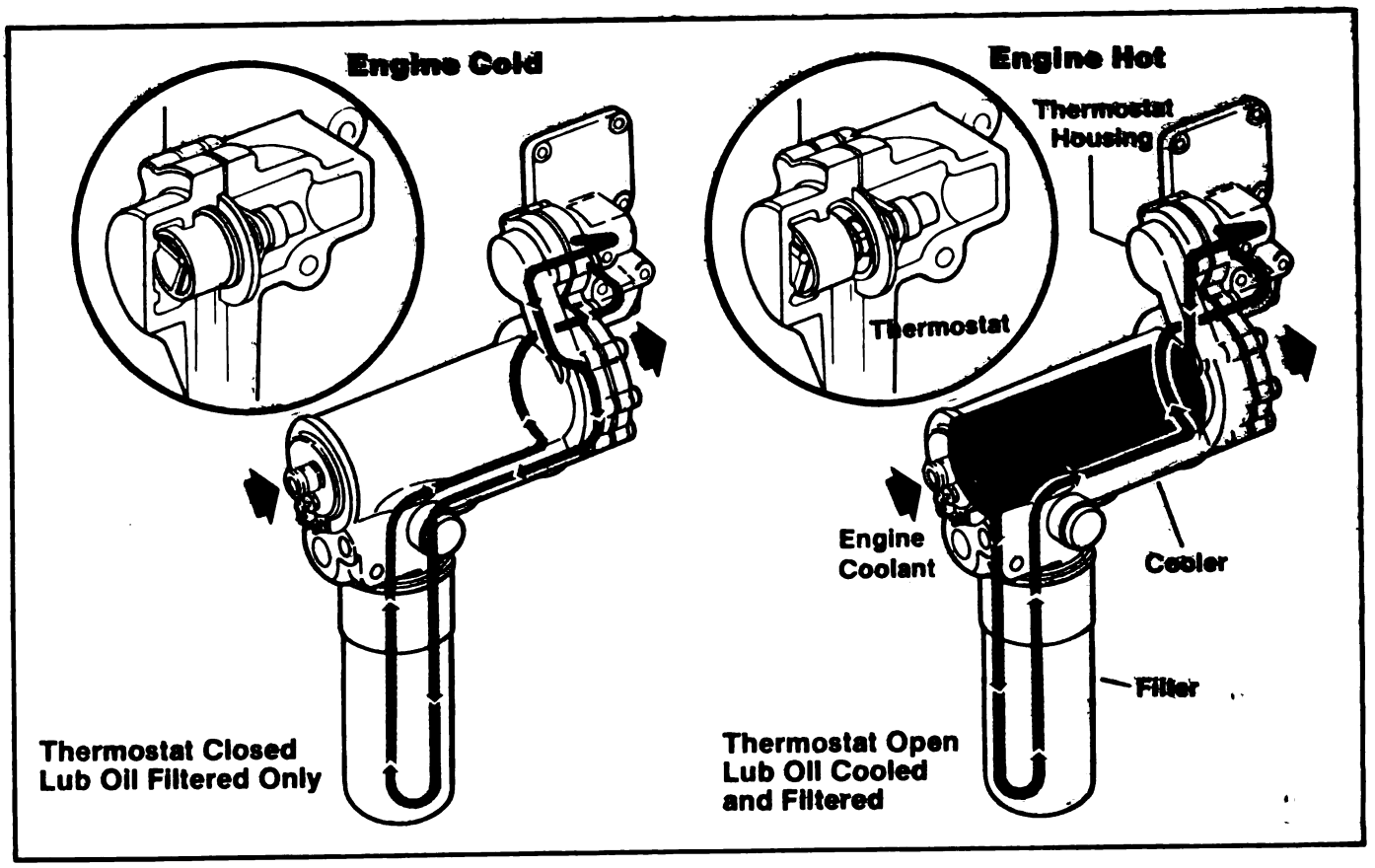

Fig. 7-19. The NTE Oil Flow Through The Oil Cooler.

Digitized by Google

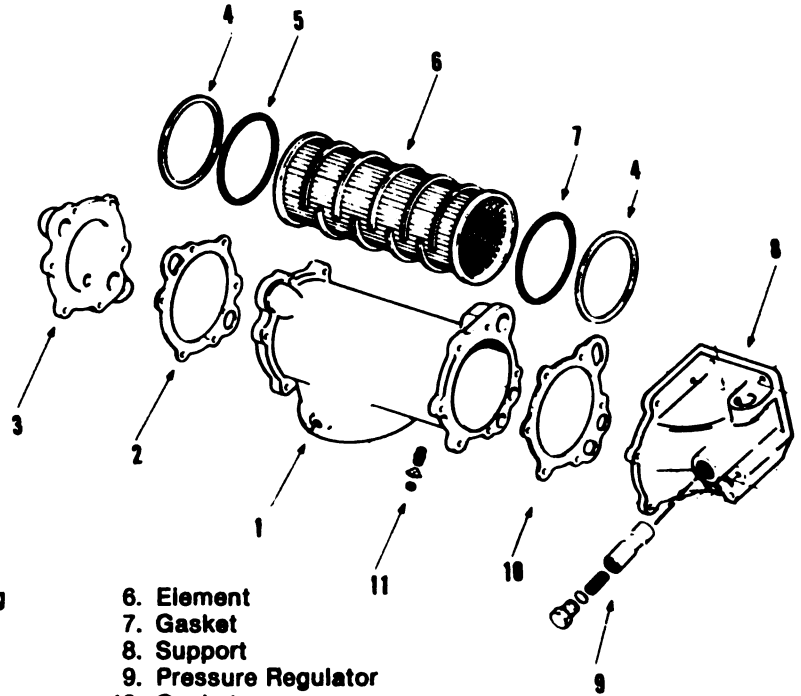

1. Cooler Housing
2. Gasket
3. Cover
4. Retainer
5. O-Ring
6. Element
7. Gasket
8. Support
9. Pressure Regulator
10. Gasket

Fig. 7-20. FFC and Big Cam Oil Cooler

3. Remove and discard the O-ring (7). Be careful and do not damage the element (6) when you remove the O-ring.
4. Remove oil and dirt from the housing. Flush the oil passages with mineral spirits in the reverse direction of the oil flow.
5. Remove the element from the housing. Hit the edge of the housing against a block of wood to remove the element from the housing.
6. Remove and discard the O-ring (5).

Cleaning

Cleaning the Element

1. Put the element into a container of carbon tetrachloride or trichlorethylene. Keep the element in the solution for several minutes. Then, flush the solution around and through the tubes in the element.

Warning: The fumes from the solution are dangerous. Use the solution in open air or in a room that has proper ventilation. Wear safety glasses and gloves.

2. Flush the tubes with a solution of alkaline. After cleaning, flush several times with hot water.
3. Put the element into a container of solution. The solution is to be:
   1 part muriatic acid
   9 parts water
   1 lb. [0.5 kg] oxalic acid and 0.01 gal. [0.038 L] of pyridene added to each 5 gal. [18.9 L] of muriatic acid.
4. Remove the element when there are no foam or bubbles in the solution. The foam and bubbles normally stop in 30 to 60 seconds.
5. Put the element into a container that has a 5 percent solution of sodium carbonate. Remove the element when there are no bubbles coming from the solution.
6. Flush the element with clean, warm water.

Cleaning the Housing

Use steam and cleaning solvent to clean the housing.

Digitized by Google

Inspection

1. Check the cooler housing for cracks, damage and corrosion.
2. Check the suport and cover for cracks, damage and corrosion.
3. Check the cooler element for damage and leaks. Use the Part No. 3375253 Tube Bundle Tester to check for leaks. Follow these instructions:
   a. Install the end plates to each end of the element.
   b. Put the sliding plate of the fixture so that the fixture will fit over the element and end plates, Fig. 7-21.

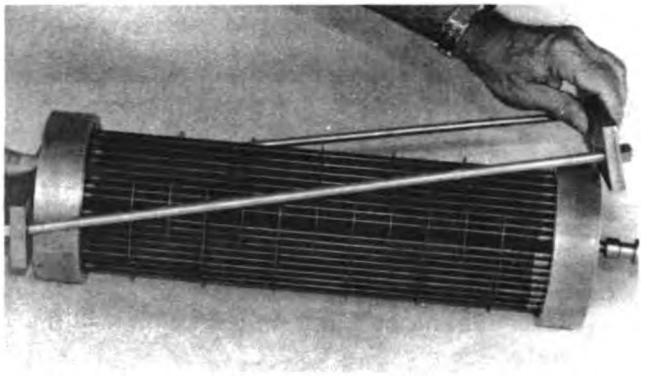

Fig. 7-21. Adjust The Length Of The Fixture

   c. Put the element into the fixture. Put the fixture so that the air connection fitting goes through the notch in the fixture plate. Install locking clips into the bars of the fixture, Fig. 7-22.
   d. Connect an air supply line that has a quick-disconnect fitting to the air connection fitting.
   e. Use an air pressure regulator and a three way air discharge valve to control the air pressure.
   f. Apply 60 psi [414 kpa] of air pressure to the element.
   g. Put the element and tool assembly into a container of water. Make sure the water completely covers the element. Check the element for air leaks.

Fig. 7-22. The Element Installed Into The Bundle Tester.

   h. Remove the element and tool assembly from the container.
   i. Use the air discharge valve to release the air pressure from the element.
   j. Remove the tube bundle tester from the element.
4. Replace all the parts that are damaged.

Repair

If less than 5 percent of the tubes in the element have restrictions or are damaged, the element can be repaired. If more than 5 percent of the tubes have restrictions, or are damaged, replace the element.

Caution: Never use a cooler element from an engine that had a failure. When an engine has a failure, metal particles enter the oil cooler. These particles cannot be completely removed from the element and can cause damage to the engine.

To repair the damaged tubes:

1. Install a new tube into the damaged tube. The O.D. of the new tube must be smaller than the I.D. of the tube you are repairing.
2. Cut the ends of the tube so it will be the same length as the other tubes. Make sure the ends of the tube are flared.
3. Solder the ends of the tube to the element. Do

Digitized by Google

not cause damage to the other tubes or the element when you solder the new tubes.

4. Check the element for leaks.

Assembly (FFC and Big Cam)

1. Put the element into the housing. Put the housing and element onto a flat workbench with the rear of the housing up.

2. Align the index mark on the element with the index mark on the housing, Fig. 7-23.

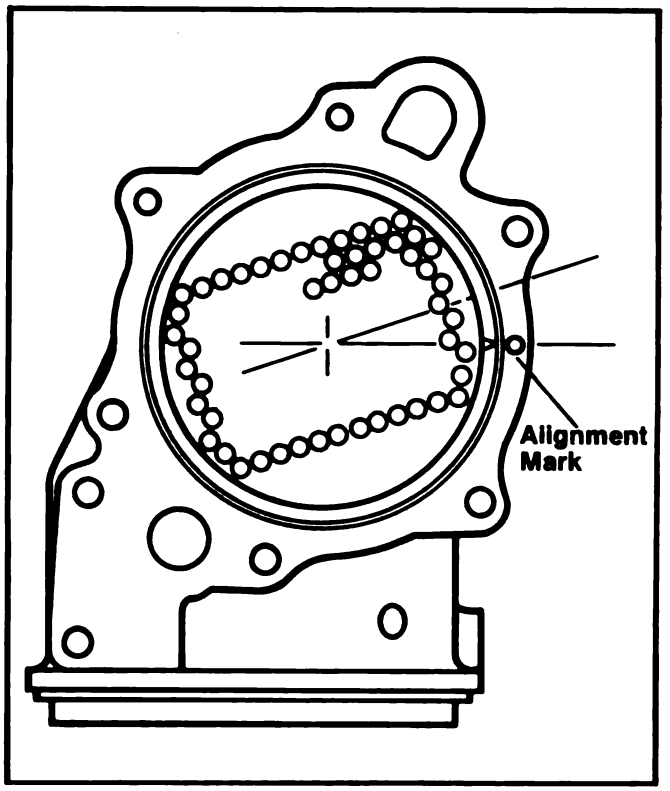

Fig. 7-23. Align the Index Marks On The Element And Housing.

   a. Some of the Part No. 208149 elements have two index marks. They can have an "O" on the tube end plate and a notch cut into the inside diameter of the rim, Fig. 7-24. Use the notch to align the element in the housing.

3. Apply a coat of clean lubricating oil to a new O-ring. Put the O-ring between the element and the housing. Make sure that the O-ring does not protrude over the element and housing.

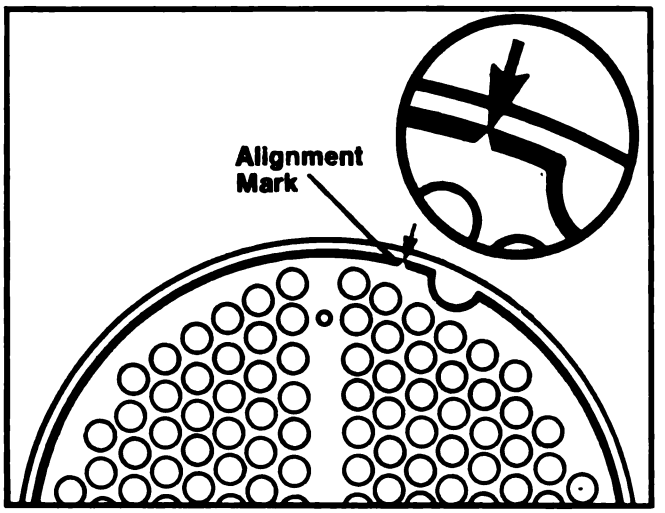

Fig. 7-24. Index Marks On The Element.

Fig. 7-25. Use The Mandrel To Install The O-Ring.

Note: The O-ring must be installed in less than one hour after the oil is applied.

4. Push the O-ring into the housing. Use the Part No. ST-1218 or ST-1223 Cooler O-Ring Mandrel to push the O-ring into the housing. Hit the mandrel with a plastic hammer until the mandrel is against the element and housing, Fig. 7-25.

   a. Use the ST-128 for an oil cooler that has a 5.0 inch [127.0 mm] diameter element.

   b. Use the ST-1223 for an oil cooler that has a 4.0 inch [101.6 mm] diameter element.

5. Install the retaining ring. Make sure that the part number on the ring is up.

Digitized by Google

6. Install the cover and a new gasket to the housing. Tighten the capscrews to 30 to 35 ft.-lbs. [41 to 47 N•m] torque.
7. Slide the housing to the edge of the workbench until you can hold the element in position with your hand. Make sure that the element does not move in the housing. Put the housing with the cover end down onto the workbench.
8. Repeat Steps 3, 4 and 5 to install the O-ring and retaining ring.
9. Install the support and a new gasket to the housing. Tighten the capscrews to 30 to 35 ft.-lbs. [41 to 47 N•m] torque.
10. Install all of the pipe plugs that were removed.
    a. Tighten the 1/4 inch pipe plug to 15 to 25 ft.-lbs. [20.3 N•m] torque.
    b. Tighten the 1/8 inch pipe plug to 5 to 7 ft.-lbs. [6.8 to 9.5 N•m] torque.

NTE (European) Oil Cooler

Disassembly

1. Remove the cover plate from the housing and discard the gasket, Fig. 7-26.

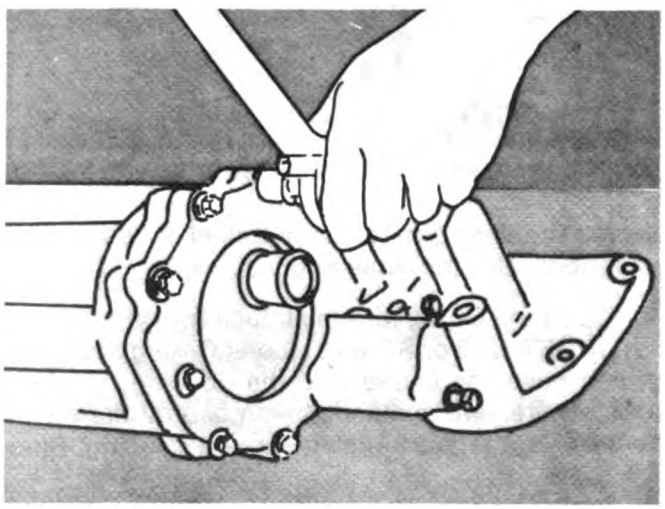

Fig. 7-26. Remove The Cover Plate.

2. Remove the thermostat from the thermostat housing. Discard the O-ring, Fig. 7-27.
3. From the opposite end of the cooler housing, remove the plate that holds the element in the housing, Fig. 7-28.

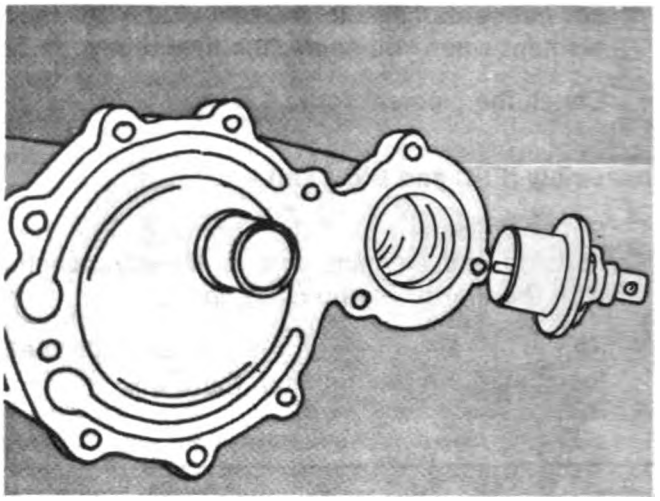

Fig. 7-27. Remove The Thermostat And O-Ring.

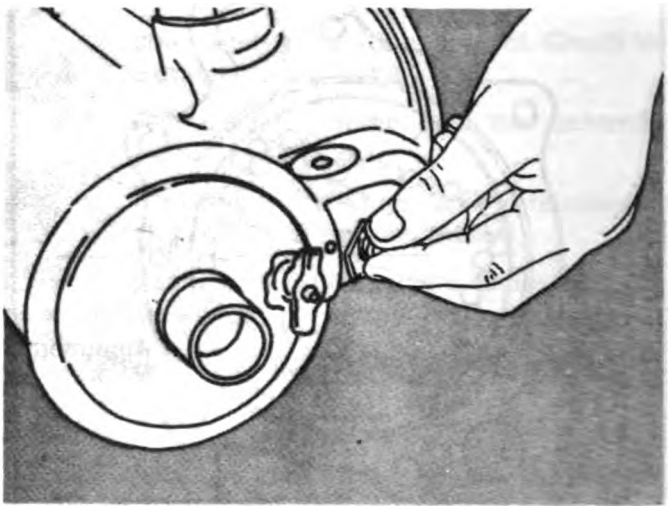

Fig. 7-28. Remove The Retaining Plate.

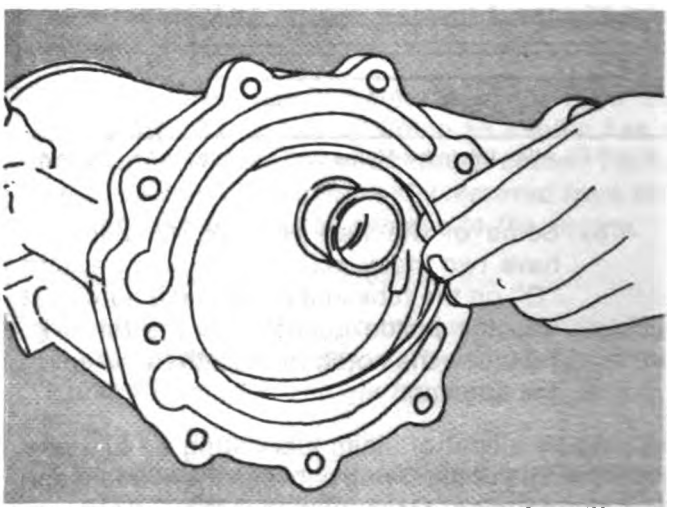

Fig. 7-29. Remove The O-Ring From The Thermostat End Of The Housing.

Digitized by Google

4. To remove the O-ring from the thermostat end of the housing, push the element approximately 0.50 inch [12.4 mm] toward the filter end of the housing. Remove and discard the O-ring, Fig. 7-29.
5. Push the element through the housing, toward the thermostat end of the housing. Remove the element, Fig. 7-30.
6. Remove and discard the O-ring from the filter end of the housing, Fig. 7-31.
7. Remove the pipe plugs from the housing.
8. Check the filter bypass valve to make sure the valve works freely, Fig. 7-32.

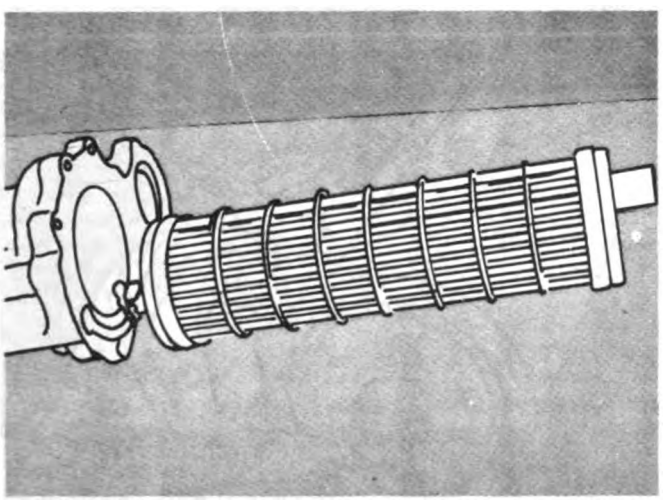

Fig. 7-30. Remove The Element From The Housing.

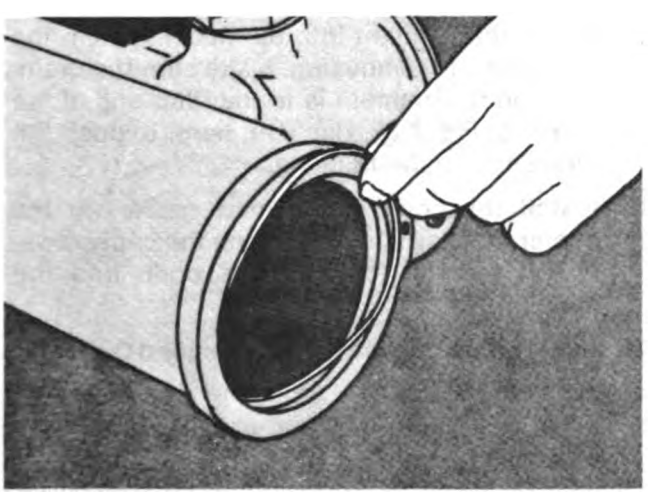

Fig. 7-31. Remove The O-Ring From The Filter End Of The Housing.

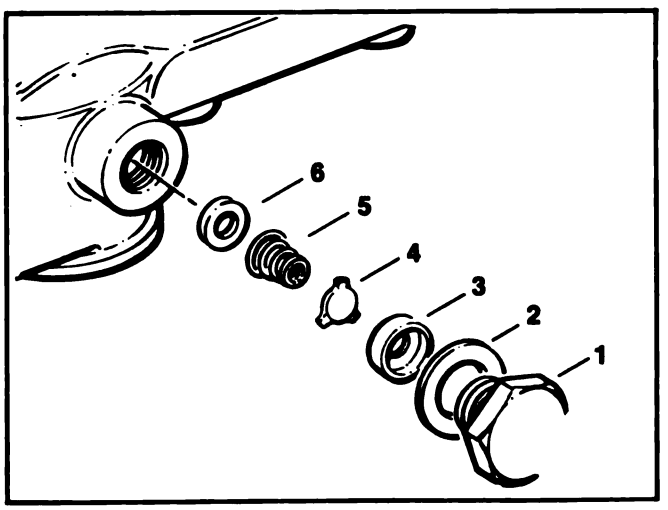

1 Plug
2 Gasket
3 Valve Seat
4 Valve
5 Valve Spring
6 Washer

Fig. 7-32. Filter Bypass Valve — Exploded View.

Cleaning

1. Clean the element and housing immediately after disassembly. This will prevent hardening and drying of foreign material in the element and housing.
2. Use mineral spirits or equivalent to clean the housing. Flush the oil passages in the reverse direction of the oil flow.
3. Flush the element with hot water. Make sure the water goes around and through the tubes of the element. Dry with compressed air.

Cuation: Never use a cooler element from an engine that had a failure. When an engine has a failure, metal particles enter the oil cooler. These particles cannot be completely removed from the element and can cause damage to the engine.

Inspection

1. Check the oil cooler element for damage and leaks. To check the element for leaks:
   a. Seal both ends of the element. One end must have a fitting for an air connection.

Digitized by Google

b. Install an air connection to the end that has a fitting.

c. Put the element into a container of water.

d. Apply 40 psi [276 kPa] air pressure to the element.

e. Check for air bubbles coming from the element.

2. Check the cooler housing for cracks, damage or corrosion.

Replacement

1. Replace the element if it has damage or leaks.
2. Replace the housing if it has cracks, damage or corrosion.

Assembly

1. Apply a coat of SAE 30 oil to the O-ring for the thermostat. Install the O-ring into the groove in the housing.
2. Install the thermostat into the housing. Push the thermostat into the housing until it is against the bottom of the bore, Fig. 7-33

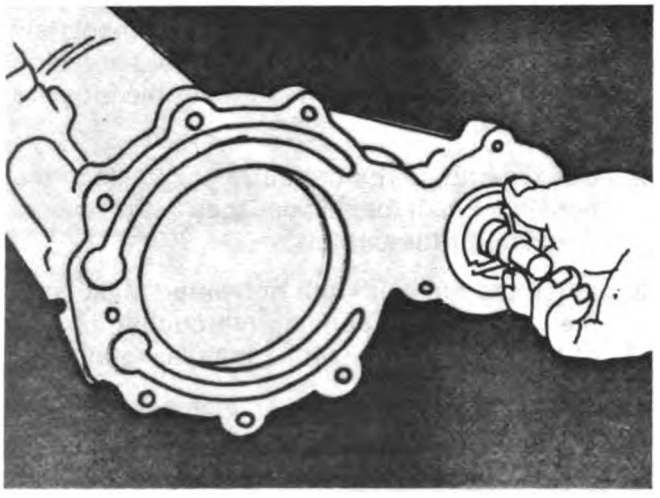

Fig. 7-33. Install The Thermostat.

3. Apply a coat of grease to the O-ring for the element.
4. Install the O-ring into the groove at the thermostat end of the housing, Fig. 7-34.

Note: Make sure the groove does not have any sharp edges before you install the O-ring.

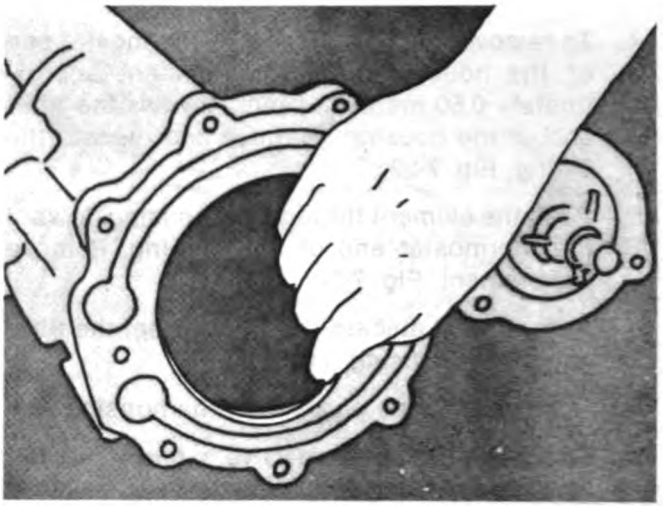

Fig. 7-34. Install The O-Ring Into The Thermostat End Of The Housing.

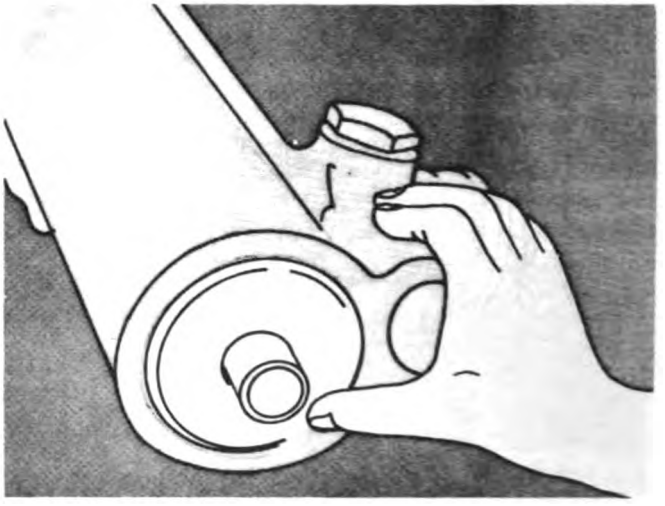

Fig. 7-35. Install The Element Into The Housing.

5. Install the element into the housing from the filter end of the housing. Make sure the draincock on the element is to the filter end of the housing, Fig. 7-35. Use your hand to push the element into the housing.
6. Install the cover and a new gasket to the cooler housing. Do not tighten the capscrews, install them 2 to 3 threads deep into the housing.
7. Apply a coat of grease to the second O-ring for the element.
8. Install the O-ring into the groove at the filter end of the housing.

Note: Make sure the groove does not have any sharp edges before you install the O-ring.

Digitized by Google

9. Tc push the element into position over the O-ring, evenly tighten four of the capscrews for the support.
10. Tighten all of the capscrews to 15 to 20 ft.-lbs. [20 to 27 N•m] torque, Fig. 7-36.
11. Install the retaining plate with a retaining screw, lockwasher and plain washer, Fig. 7-37. Tighten the screw to 5 to 6 ft.-lbs. [6 to 8 N•m] torque.
12. Apply a coat of Locktite 572 to the threads of the draincock. Install the draincock into the element and tighten to 5 to 10 ft.-lbs. [6 to 13 N•m].

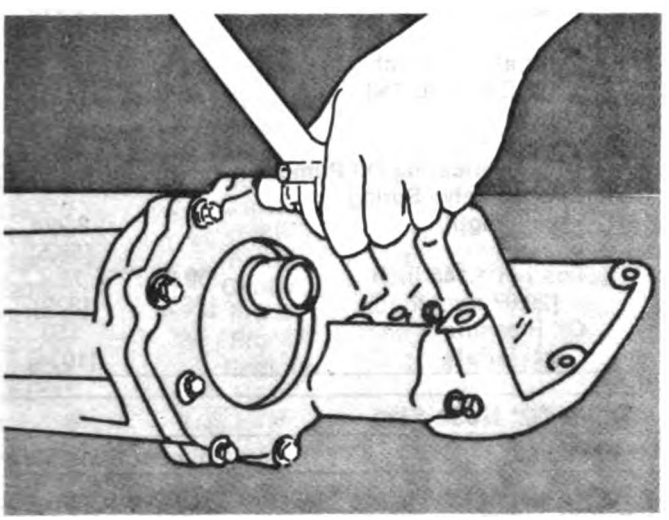

Fig. 7-36. Tighten The Capscrews For The Cover.

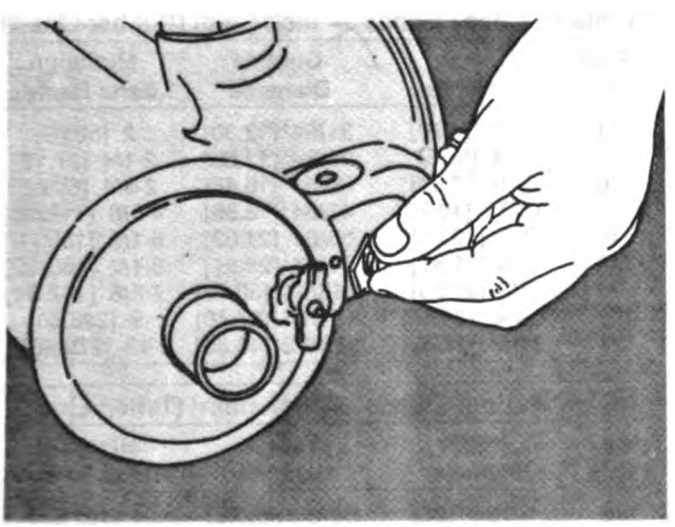

Fig. 7-37. Install The Retaining Plate.

Table 7-1: Lubricating Oil Pump Specifications — Inch [mm] (Reference Fig. 7-0)

Ref. No.	Measurement	Worn Limit	New Minimum	New Maximum
	Single Lubricating Oil Pump			
1.	**Bushings**			
	Inside diameter	0.6185 [15.710]	0.6165 [15.659]	0.6175 [15.684]
2.	**Idler and Drive Shaft**			
	Outside diameter	0.6145 [15.608]	0.615 [15.62]	0.6155 [15.634]
3.	**Drive Gear to Body Clearance**	0.012 [0.30]		
4.	**Drive Shaft**			
	End Movement		0.002 [0.05]	0.005 [0.13]
	Idler shaft			
	Shaft Protrusion Inside Body		0.720 [18.29]	0.740 [18.80]
	Driven Gear/Drive Shaft			
	Shaft Protrusion		0.855 [21.72]	0.875 [22.22]
	Single (Double Capacity) Lubricating Oil Pump			
1.	**Bushings**			
	Inside Diameter	0.879 [22.33]	0.8767 [22.268]	0.8777 [22.293]
2.	**Idler and Drive Shaft**			
	Outside Diameter	0.874 [22.17]	0.8745 [22.212]	0.875 [22.22]
3.	**Drive Gear to Body Clearance**	0.012 [0.30]		
4.	**Drive Shaft**			
	End Movement		0.002 [0.05]	0.008 [0.20]
	Idler Shaft			
	Shaft Protrusion Above body to Cover Face		0.955 [24.26]	0.985 [25.02]
	Driven Gear/Drive Shaft			
	Shaft Protrusion		1.035 [26.29]	1.055 [26.80]
5.	**Piston Cooling Oil Tube**			
	Protrusion Above Body Mounting Face		2.970 [75.44]	3.000 [76.20]
	Double Lubricating Oil Pump			
1.	**Bushings**			
	Inside Diameter	0.6185 [15.710]	0.6165 [15.659]	0.6175 [15.684]
2.	**Idler and Drive Shaft**			
	Outside Diameter	0.6145 [15.608]	0.615 [15.62]	0.6155 [15.634]
3.	**Drive Gear to Body Clearance**	0.012 [0.30]		
4.	**Drive Shaft**			
	End Movement		0.004 [0.10]	0.007 [0.18]

Digitized by Google

Table 7-1: Lubricating Oil Pump Specifications — Inch [mm] (Reference Fig. 7-0) (Cont.)

Ref. No.	Measurement	Worn Limit	New Minimum	New Maximum
	Idler Shaft			
	Shaft Protrusion Above Back Surface of Body		2.600 [66.04]	2.620 [66.55]
	Idler Shaft			
	Suffix Letter L		2.680 [68.07]	2.690 [68.33]
	Drive Gear/Drive Shaft			
	Shaft Protrusion		0.040 [1.02]	0.060 [1.52]
	Single Scavenger Pump			
1.	**Bushings**			
	Inside Diameter	0.6185 [15.710]	0.6165 [15.659]	0.6175 [15.684]
2.	**Idler and Drive Shaft**			
	Outside Diameter	0.6145 [15.608]	0.615 [15.62]	0.6155 [15.634]
	Idler Shaft			
	Protrusion	Flush with front surface of pump.		
	Driven Gear/Drive Shaft			
	Protrusion		0.580 [14.73]	.0610 [15.49]
	Coupling Dowels			
	Protrusion Above Coupling Face		0.990 [25.15]	1.010 [25.64]
	Coupling/Drive Shaft			
	Shaft Protrusion		0.050 [1.27]	0.070 [1.78]
4.	**Drive Shaft**			
	End Movement		0.004 [0.10]	0.010 [0.25]
	Double Scavenger Pump			
1.	**Bushings**			
	Inside Diameter	0.841 [21.36]	0.840 [21.34]	0.8405 [21.349]
2.	**Idler and Drive Shaft**			
	Outside Diameter	0.837 [21.26]	0.8375 [21.272]	0.838 [21.29]
	Idler Shaft			
	Protrusion	Flush with front surface of pump.		
	Driven Gear/Drive Shaft			
	Protrusion		0.580 [14.73]	0.610 [15.49]
	Coupling Dowels			
	Protrusion Above Coupling Face		0.990 [25.15]	1.010 [25.65]
	Coupling/Drive Shaft			
	Shaft Protrusion		0.050 [1.27]	0.070 [1.78]
4.	**Drive Shaft**			
	End Movement		0.004 [0.10]	0.007 [0.25]
	FFC Filter/Cooler or Non-FFC Lubricating Oil Pump Pressure Regulator Spring			
	Free Length			3.410 [86.36]

Table 7-1: Lubricating Oil Pump Specifications — Inch [mm] (Reference Fig. 7-0) (Cont.)

Ref. No.	Measurement	Worn Limit	New Minimum	New Maximum
	Load at 2.125 inch [53.98 mm] lb. [N]		45 [200]	50 [222]
	Recommended Oil Pressure psi [kPa]		50 [345]	70 [483]
	FFC Lubricating Oil Pump By-Pass Valve Spring			
	Free Length			2.500 [63.50]
	Load at 1.780 inch [45.21 mm] lb. [N]		79 [351]	91 [405]
	Oil Pressure psi [kPa]			130 [896]
	DFC Lubricating Oil Pump Pressure Regulator Spring			
	Free Length			3.310 [84]
	Load at 1.820 inch [46.2 mm] lb. [N]		21.9 [97.4]	25.7 [114]
	Oil Pressure psi [kPa]			40 [275.7]
	DFC Lubricating Oil Pump Bypass Valve Spring			
	Free Length			2.224 [56.5]
	Load at 1.145 inch [29.07 mm] lb [N]		59.2 [263]	72.4 [322]
	Oil Pressure psi [kPa]			150 [1034]

Table 7-2: Hose Size

Location	Minimum Hose Size
Turbocharger Oil Supply	No. 6
Full Flow Filter	No. 16
Turbocharger Oil Drain	No. 16

Table 7-3: Hose Bends — Inch [mm] (Rubber-Lined)

Hose Size	Inside Diameter	Outside Diameter	Minimum Bend Radius
4	3/16 [4.76]	31/64 [12.30]	2 [50.80]
5	1/4 [6.35]	35/64 [13.89]	2-1/4 [57.15]
6	5/16 [7.94]	39/64 [15.48]	2-3/4 [69.85]
8	13/32 [10.32]	47/64 [18.65]	4-5/8 [117.48]
10	1/2 [12.70]	53/64 [21.03]	5-1/2 [139.70]
12	5/8 [15.87]	61/64 [24.21]	6-1/2 [165.10]
16	7/8 [22.23]	1-13/64 [30.56]	7-3/8 [187.34]
20	1-1/8 [28.58]	1-31/64 [37.70]	9 [228.60]
24	1-3/8 [34.93]	1-23/32 [43.66]	11 [279.40]

Table 7-4: Hose Bends — Inch [mm] (Teflon-Lined)

Hose Size	Inside Diameter	Outside Diameter	Minimum Bend Radius
6	5/16 [7.94]	39/64 [15.48]	4 [101.60]
16	7/8 [22.23]	1-13/64 [30.56]	7-3/8 [187.33]

Digitized by Google

Table 7-5: Oil Pan Capacity — U.S. Gallons [Litres] and Degrees of Angularity

		Capacity		Degrees of Angularity			
Part Number	Sump Location	High	Low	Front Up	Front Down	F.P. Side Down	Exhaust Side Down
10451	Center	6-1/2 [25]	4 [15]				
10474-2	Rear	7 [26]	5-1/2 [21]	19	21	35	35
10492-2	Rear	6-1/2 [25]	4 [15]	19	21	35	35
10668-1	Rear	8-1/2 [32]	5-1/2 [21]	16	16	16	16
10774	Rear	7 [26]	5-1/2 [21]	19	20	30	25
10777	Front	7 [26]	5-1/2 [21]	40	40	45	35
10779	Rear	8-1/2 [32]	5-1/2 [21]	16	16	16	16
10809	Full	11 [42]	3 [11]				
10811	Center	7 [26]	5-1/2 [21]	32	40	37	35
10850	Rear	7 [26]	5-1/2 [21]	14	12	45	20
10850-A	Rear	7 [26]	5-1/2 [21]	14	12	45	20
11055	Front	7 [26]	5-1/2 [21]				
11102	Front	7 [26]	5-1/2 [21]				
11150	Dry						
11194	Dry						
103949	Front	7 [26]	5-1/2 [21]	15	35	35	35
110626	Rear	7 [26]	5-1/2 [21]	40	25	45	19
116916	Rear	7 [26]	5-1/2 [21]	20	15	37	35
118784	Rear	7 [26]	5-1/2 [21]	14	12	45	20
119330	Center	7 [26]	5-1/2 [21]	45	45	45	45
119382	Full	7 [26]	5-1/2 [21]	42	1	19	40
119586	Front	7 [26]	5-1/2 [21]				
120905	Center	7 [26]	5-1/2 [21]				
121089	Front	6 [23]	4-3/4 [18]	15	30	30	30
121244	Front	6 [23]	4 [15]	36	45	45	40
121862	Center	6-1/2 [25]	4-1/2 (17]	22	24	40	40
121377	Rear	6 [23]	4 [15]	45	38	42	40
125318	Rear	6-1/2 [25]	4 [15]	28	15	38	38
126818	Rear	7 [26]	5-1/2 [21]	40	25	45	19
129434	Rear	6 [23]	4 [15]	45	38	42	40
133879	Rear	7 [26]	5-1/2 [21]	36	11	32	30
134070	Center	6 [23]	4 [15]	35	33	35	35
134271	Front	7 [26]	5-1/2 [21]	10	35	40	40
134279	Rear	7 [26]	5-1/2 [21]	19	21	35	35
134283	Rear	7 [26]	5-1/2 [21]	19	20	30	25
137156	Full	7 [26]	4 [15]	45	8	42	40
139493	Front	6 [23]	4 [15]	36	45	45	40
139745	Rear	6 [23]	4 [15]	45	38	42	40
146866	Dry						
148160	Rear	6 [23]	4 [15]	45	39	40	42
151079	Rear	6 [23]	4 [15]				
152410	Rear	6 [23]	4-1/2 [17]	27	15	25	35

Digitized by Google

Table 7-5: Oil Pan Capacity — U.S. Gallons [Litres] and Degrees of Angularity (Cont'd.)

		Capacity		Degrees of Angularity			
Part Number	Sump Location	High	Low	Front Up	Front Down	F.P. Side Down	Exhaust Side Down
153729	Rear	7 [26]	5-1/2 [21]	19	12	25	25
154418	Full	6 [23]	4 [15]	15	15	15	15
161206	Front	6 [23]	4 [15]	36	45	45	40
162377	Rear	7 [26]	5-1/2 [21]	45	38	42	40
164436	Front	6 [23]	4 [15]	40	40	45	35
164776	Rear	7 [26]	5-1/2 [21]	40	25	45	19
167186	Rear	7 [26]	5-1/2 [21]	19	12	25	25
167429	Rear	7 [26]	5-1/2 [21]	40	25	45	19
169348	Front	6 [23]	4 [15]	40	40	45	35
177155	Rear	6 [23]	4 [15]	45	39	40	42
181788	Rear	7 [26]	5-1/2 [21]	20	15	37	35
187756	Center	6-1/2 [25]	4 [15]	24	24	32	30
189672	Full	12 [45]	3-1/2 [13]				
193625	Rear	7 [26]	5-1/2 [21]	16	12	35	39
193629	Rear	7 [26]	5-1/2 [21]	16	12	35	39
193631	Rear	7 [26]	5-1/2 [21]	16	12	35	39
193634	Rear	7 [26]	5-1/2 [21]	16	12	35	39
193635	Rear	7 [26]	5-1/2 [21]	16	12	35	39
193636	Rear	7 [26]	5-1/2 [21]	16	12	35	39
193637	Rear	7 [26]	5-1/2 [21]	16	12	35	39
193638	Rear	7 [26]	5-1/2 [21]	16	12	35	39
193639	Rear	7 [26]	5-1/2 [21]	16	12	35	39
200787	Rear	7 [26]	5-1/2 [21]	16	12	35	39
201836	Rear	5 [19]	3-1/2 [13]	27	15	25	35
201837	Rear	5 [19]	3-1/2 [13]	27	15	25	35
201839	Rear	7 [21]	5-1/2 [21]	16	12	35	39
201841	Rear	5 [19]	3-1/2 [13]	27	15	25	35
201842	Rear	7 [26]	5-1/2 [21]	16	12	35	39
201843	Rear	7 [26]	5-1/2 [21]	16	12	35	39
201844	Rear	5 [19]	3-1/2 [13]	27	15	25	35
202283	Front	7 [26]	5-1/2 [21]	10	35	40	40
202284	Front	7 [26]	5-1/2 [21]	10	35	40	40
203561	Rear	7 [26]	5-1/2 [21]	19	12	25	25
203563	Rear	7 [26]	5-1/2 [21]	19	12	25	25
203564	Rear	7 [26]	5-1/2 [21]	19	12	25	25
203841	Front	7 [26]	5-1/2 [21]	10	35	40	40
3002151	Center	6-1/2 [25]	5-1/2 [21]	24	24	32	30
3002152	Center	7 [26]	5-1/2 [21]				
3005178	Rear	7 [26]	5-1/2 [21]	19	12	25	25
3005179	Rear	7 [26]	5-1/2 [21]	19	12	25	25
3005181	Rear	7 [26]	5-1/2 [21]	19	12	25	25
3005183	Rear	7 [26]	5-1/2 [21]	19	12	25	25

Digitized by Google

Group 8

The cooling system includes the water pump for the engine, the fan hub, thermostat, heat exchange, and sea or raw water pump.

Cooling System

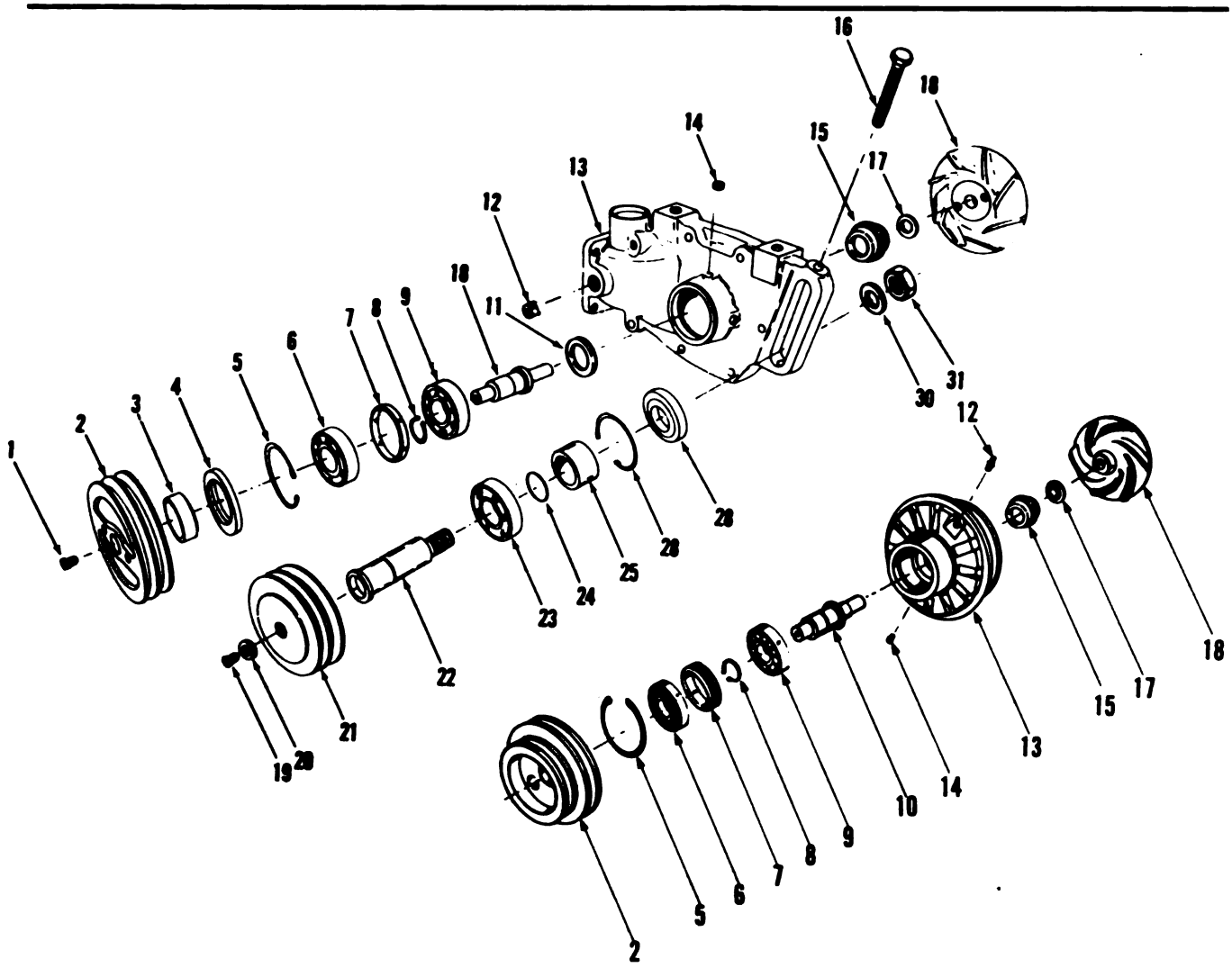

1. Pipe Plug
2. Pulley
3. Wear Sleeve
4. Grease Seal
5. Snap Ring
6. Ball Bearing
7. Spacer
8. Snap Ring
9. Ball Bearing
10. Shaft
11. Grease Seal
12. Pipe Plug
13. Water Pump Housing
14. Pipe Plug
15. Carbon Face Seal
16. Adjusting Screw
17. Seat
18. Impeller
19. Capscrew
20. Washer
21. Idler Pulley
22. Idler Shaft
23. Ball Bearing
24. "O" Ring
25. Spacer
26. Snap Ring
27. Capscrew
28. Grease Seal
29. Lockwasher
30. Spacer
31. Nut

Fig. 8-1 (N10894). FFC And Eccentric Water Pump — Exploded View.

Digitized by Google

Service Tool List

Service Tools (Or Equivalent) Required

Service Tool Number	Tool Name
ST-657	Bearing Mandrel
ST-658	Bearing Mandrel
ST-709	Puller
ST-1114	Bearing Separator
ST-1154	Seal Mandrel
ST-1159	Wear Sleeve Driver
ST-1161	Seal Mandrel
ST-1191	Seal Driver
3375110	Impeller Support Plate (Phenolic impellers only)
3375180	Oil Seal Pilot
3375257	Pulley/Impeller Puller
3375265	Pulley/Impeller Puller
3375318	Bearing Mandrel
3375326	Bearing Separator
3375448	Seal and Seat Mandrel
3376081	Bearing Mandrel

Standard Tools

Arbor Press	Grease Gun
Bearing Packer	Feeler Gauge Set
0-1, 1-2, 2-3 Micrometers	Telescoping Gauges
Snap Ring Pliers (Large and Small)	
5/16-18, 3/8-16, 6/16-14 Taps	

The Eccentric Water Pump

Disassembly

1. Remove the huglock nut (14, Fig. 8-2) and the washer (15). The huglock nut and washer are not used on the water pump with the short shaft. Use the Part No. 3375265 Puller to remove the pulley (1) from the shaft (7). Remove the large retaining ring (2).

2. Use the 3375265 Puller to remove the impeller (13) from the shaft, Fig. 8-3. If the pump has a plastic (phenolic) impeller, the impeller does not have holes for a puller. Use the Part No. 3375110 Support Plate between the impeller and water pump housing. Use a press to push the shaft from the impeller, Fig. 8-4.

3. Support the water pump housing on the pulley side of the housing. Use a press to push the shaft and bearing assembly from the housing. Apply the pressure to the impeller end of the shaft.

4. Remove the cup seat (12, Fig. 8-2), face seal (11), grease fittings (10), and relief fittings (8).

5. Use the Part No. ST-1114 Bearing Disassembly Fixture to support the bearing and spacer. Push

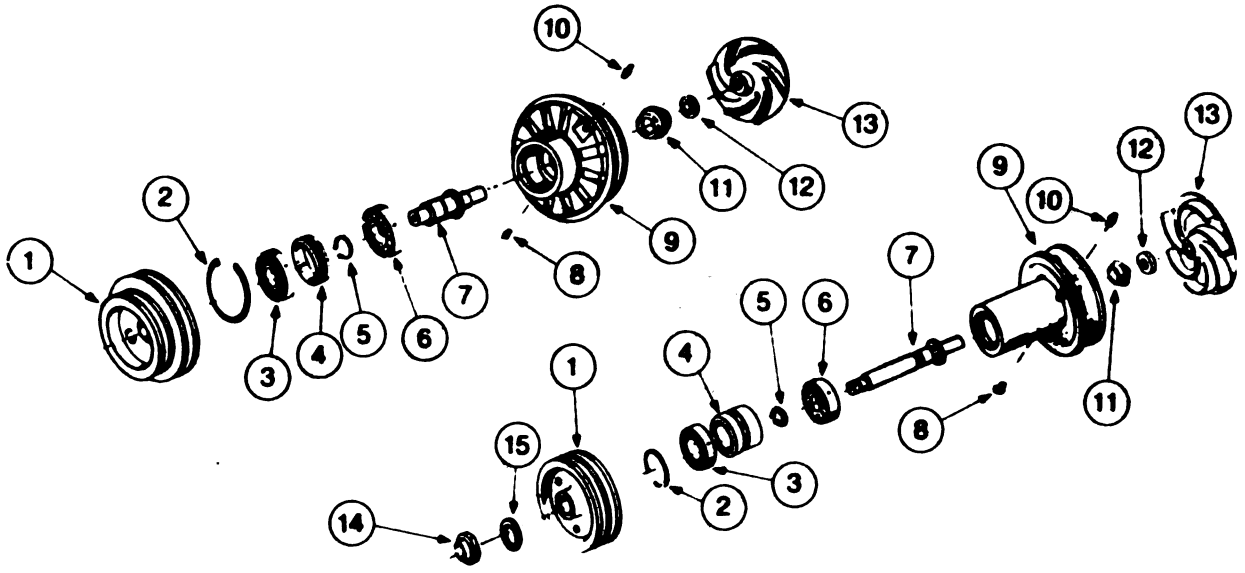

1. Water Pump Pulley
2. Retaining Ring
3. Ball Bearing
4. Spacer
5. Retaining Ring
6. Ball Bearing
7. Shaft
8. Relief Fitting
9. Water Pump Housing
10. Grease Fitting
11. Face Seal
12. Cup Seat
13. Impeller
14. Huglock Nut
15. Washer

Fig. 8-2 (N10845). Eccentric Water Pump With Short Shaft And Eccentric Water Pump With Long Shaft.

Digitized by Google

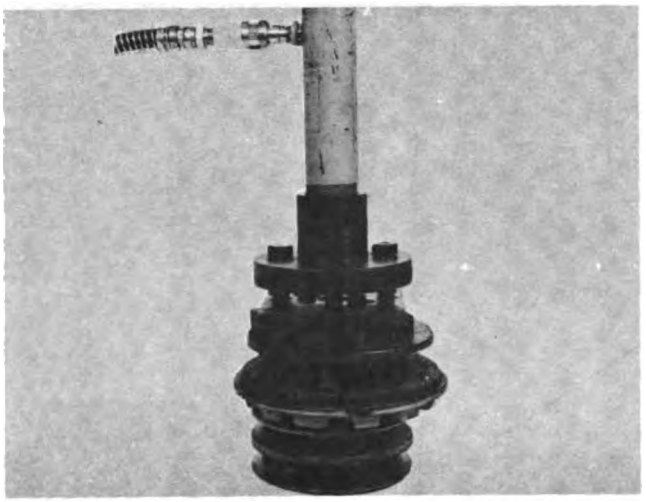

Fig. 8-3 (UW101). Using A Puller To Remove The Impeller.

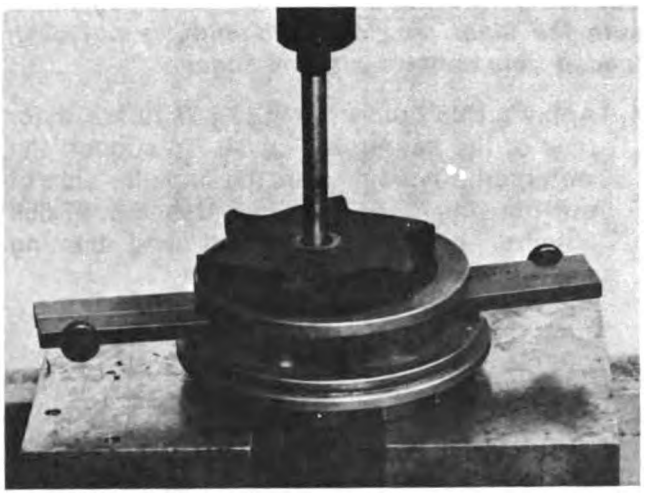

Fig. 8-4 (N10847). Using A Press To Remove The Impeller.

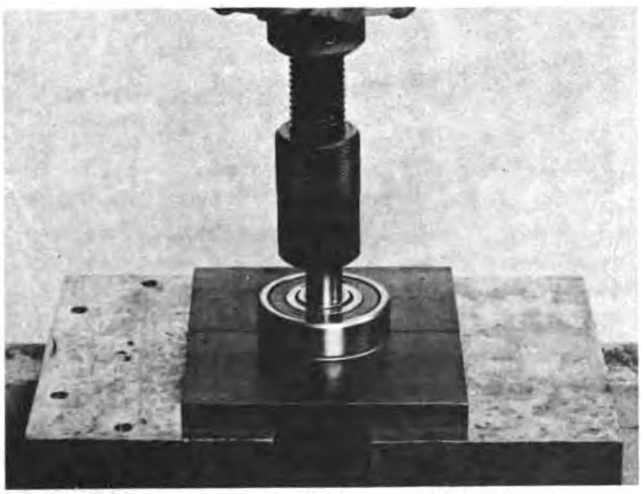

Fig. 8-5 (N10848). Push The Shaft From The Bearing.

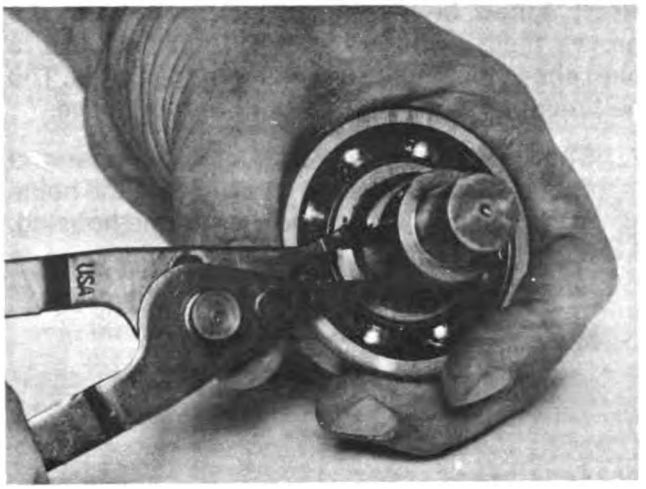

Fig. 8-6 (N10849). Remove The Retaining Ring.

the shaft from the bearing and spacer, Fig. 8-5.

6. Remove the small retaining ring that holds the inner bearing in position, Fig. 8-6.
7. Use the ST-1114 to support the bearing. Push the shaft from the bearing.

Cleaning

1. Clean all parts with cleaning solvent. Dry with compressed air.

Inspection

1. Inspect the bearings. Check for damage or wear to the races of the bearings. If the bearings are damaged or worn, be sure to check the shafts and bore in the housing for damage and wear. Discard the bearings.
2. Inspect the bearing spacer for wear or damage.
3. Check the water pump impeller for cracks or corrosion.
4. Measure the bore of the impeller and the outside diameter of the impeller and of the shaft. The press-fit between the shaft and the impeller bore must be a minimum of 0.001 inch [0.03 mm]. Refer to Table 8-1, in the back of this section, to find the correct dimensions of the parts.
5. Check the shaft for wear and damage.
6. Check the grooves in the pulley for wear and damage.

Digitized by Google

Note: A new belt, when pushed down into the groove, must protrude 1/16 to 1/8 inch [0.06 to 0.13 mm] above the outside diameter of the pulley. The belt must not touch the bottom of the groove.

7. Check the water pump housing for wear and damage. Make sure the weep hole in the housing is open. Measure the bore in the housing, Fig. 8-7. Discard the housing if the bore is larger than 2.4494 inch [62.215 mm].

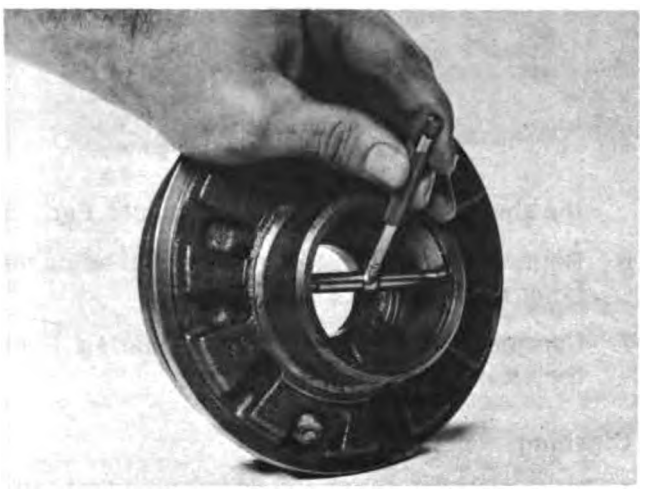

Fig. 8-7 (N10850). Measure The Bore In The Housing.

Replacement

Replace any parts which are damaged or worn beyond the specifications in Table 8-1.

Assembly

1. Apply a coat of clean lubricating oil to the outside diameter of the shaft. Support the new inner bearing with a Part No. ST-658 Mandrel. Use a press to push the shaft into the bearing, Fig. 8-8. Push the shaft into the bearing until the bearing is against the larger diameter (shoulder) of the shaft.

2. Install the small retaining ring on the shaft. Make sure the ring is against the bearing. Install the bearing spacer onto the shaft. The side of the spacer must be against the side of the bearing.

3. Support the new outer bearing with the ST-658. Push the shaft into the bearing until the bearing is against the spacer. Make sure the bearings turn freely.

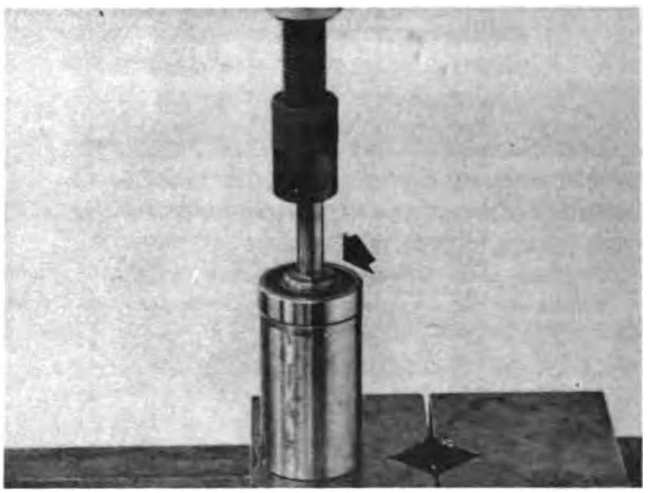

Fig. 8-8 (N10851). Push The Shaft Into The Bearing.

Caution: To prevent damage to the bearing, make sure the inner race of the bearing is not overloaded from contact with the spacer.

4. Apply a thin coat of Loctite 601 to the outer race of the bearings, Fig. 8-9. To support the waterpump housing, put the impeller side of the housing on a mandrel. Use the ST-658 Mandrel to push the shaft and bearing assembly into the housing.

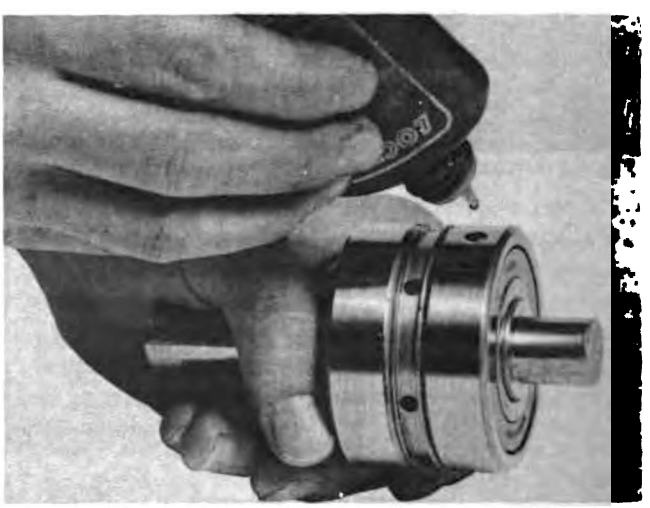

Fig. 8-9 (N10852). Apply Loctite Onto The Bearings.

Caution: Do not support the housing on the thin section of the impeller cavity.

5. Install the larger retaining ring into the water pump housing. The flat side of the ring must be against the bearing.

Digitized by Google

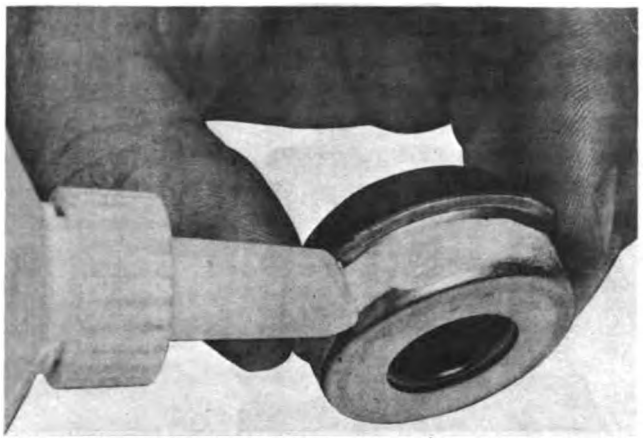

Fig. 8-10 (N10853). Apply Sealant Onto The Seat.

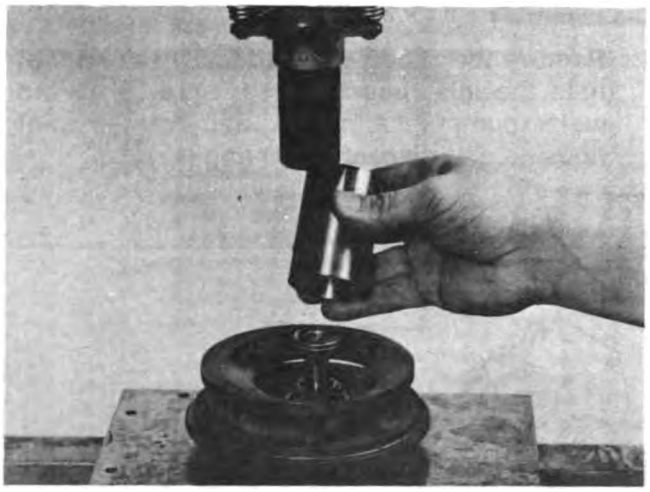

Fig. 8-11 (N10854). Install The Seat Onto The Shaft.

Fig. 8-12 (UW102). Apply Loctite Between The Shaft And The Seat.

6. Turn the water pump housing and support the drive side of the housing. Apply a coat of Part No. 3375066 Loctite to the outside diameter of the brass part of the seal, Fig. 8-10. Push the new seal into the housing until the seal is against the bottom of the bore. Use the Part No. 3375448 Mandrel to push the seal into the housing.
7. Use the 3375448 and push the new cup seat onto the shaft. The 3375448 will put the cup seat into the correct position against the seal, Fig. 8-11.
8. Apply one drop of Loctite 290 to the cup seat. Put the drop of Loctite between the shaft and the cup seat, Fig. 8-12.

Caution: Do not apply more than one drop of the Loctite. More than one drop will cause the seal and seat to become fastened together.

9. Apply a thin coat of Loctite 601 to the inside diameter of the impeller. Support the water pump on the pulley end of the shaft. Push the impeller onto the shaft. The minimum clearance between the vanes of the cast iron impeller and the water pump housing must be 0.020 inch [0.51 mm]. The maximum clearance must not be more than 0.040 inch [1.02 mm], Fig. 8-13.

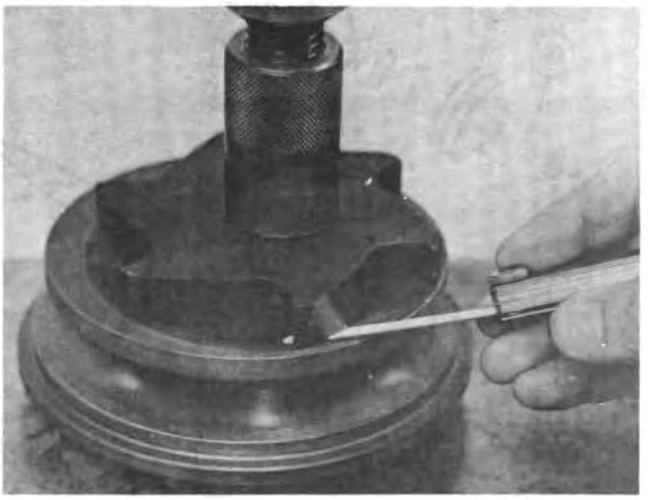

Fig. 8-13 (N10855). Measure The Clearance For The Impeller.

Note: The minimum clearance for a plastic (Phenolic) impeller is 0.030 inch [0.76 mm]. The maximum clearance must not be more than 0.050 inch [1.27 mm].

Digitized by Google

(18, Fig. 8-15). Push the shaft from the bearing.

10. Remove the pipe plug (2, Fig. 8-15) from the idler pulley (4).

11. Remove the retaining ring (3, Fig. 8-15) from the shaft (8).

12. Use the 3375326 to support the idler pulley. Push the shaft and bracket assembly (8, Fig. 8-15) from the pulley, Fig. 8-19.

13. Remove the oil seal (7, Fig 8-15) and retaining ring (6) from the pulley. Use the flat end of a punch to push the bearing (5) from the pulley, Fig. 8-20. Discard the oil seal and bearing.

Fig. 8-20 (N10863). Remove The Bearing From The Pulley.

Cleaning

Clean all of the parts with cleaning solvent. Dry with compressed air.

Inspection

1. Check the impeller for cracks or corrosion.

2. Measure the bore of the impeller and the outside diameter of the impeller end of the shaft. The press-fit between the shaft and the impeller bore must be a minimum of 0.001 inch [0.03 mm]. Refer to Table 8-2, in the back of this section, to find the correct dimensions of the parts.

3. Check the shaft for wear and damage.

4. Check the grooves in the pulleys for wear and damage.

Note: A new belt, when pushed down into the groove, must protrude 1/16 to 1/8 inch [0.06 to 0.13 mm] above the outside diameter of the pulley. The belt must not touch the bottom of the groove.

5. Measure the bore in the drive and idler pulley. Measure the outside diameter (pulley end) of the water pump shaft. Measure the outside diameter (pulley end) of the idler shaft. The press-fit between the shaft diameters and pulley bores must be a minimum of 0.001 inch [0.03 mm].

6. Check the wear sleeve (23, Fig. 8-15) for wear or damage. To remove the sleeve, use a chisel to cut a groove in the sleeve, Fig. 8-21. Be careful and do not damage the pulley. Use a

Fig. 8-21 (N10864). Cut The Wear Sleeve.

Fig. 8-22 (N10865). Push The Wear Sleeve From The Pulley.

Digitized by Google

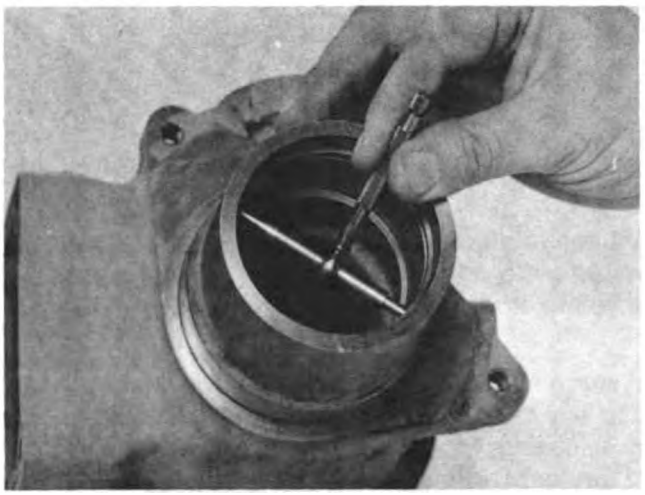

Fig. 8-23 (N10866). Measure The Bore In The Housing.

punch to push the sleeve from the pulley, Fig. 8-22.

7. Check the water pump housing for cracks, damage or corrosion. Make sure the "weep" hole in the housing is open. Measure the bore in the housing, Fig. 8-23. Refer to Table 8-2 to find the correct dimensions.

Assembly

Assemble the Idler Pulley and Bracket

1. Apply grease to the bearings. Make sure the grease meets the specifications of MIL-G-3545.
2. Use the Part No. ST-567 Bearing Mandrel to push the bearing (5, Fig. 8-15) into the pulley (4).

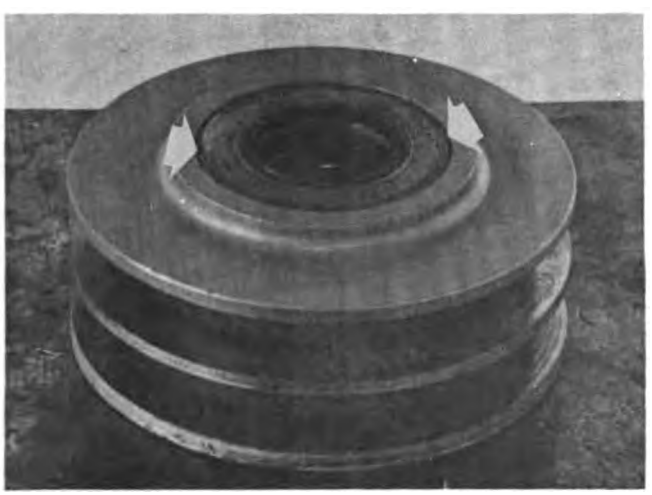

Fig. 8-24 (N10867). The Seal Installed Into The Pulley.

3. Install the retaining ring (6, Fig. 8-15) with the flat side of the retaining ring against the bearing. Install a new seal (7) so that the flat side of the seal is even with the hub of the pulley as shown in Fig. 8-24. Use the Part No. ST-1159 Seal Driver to install the seal.
4. Push the pulley and bearing assembly onto the shaft (8, Fig. 8-15). Install the retaining ring (3).
5. Put grease into the pulley cavity until the cavity is one-half to two-thirds full. Install the pipe plug.

Assemble the Water Pump

1. Apply a thin coat of clean lubricating oil to the shaft (19, Fig. 8-15). Use the Part No. ST-658 Bearing Mandrel to support the smaller bearing (18). Push the impeller end of the shaft into the bearing until the bearing is against the larger diameter (shoulder) of the shaft as shown in Fig. 8-25.
2. Use the Part No. 3375318 Bearing Mandrel to support the outer bearing (20). Push the pulley

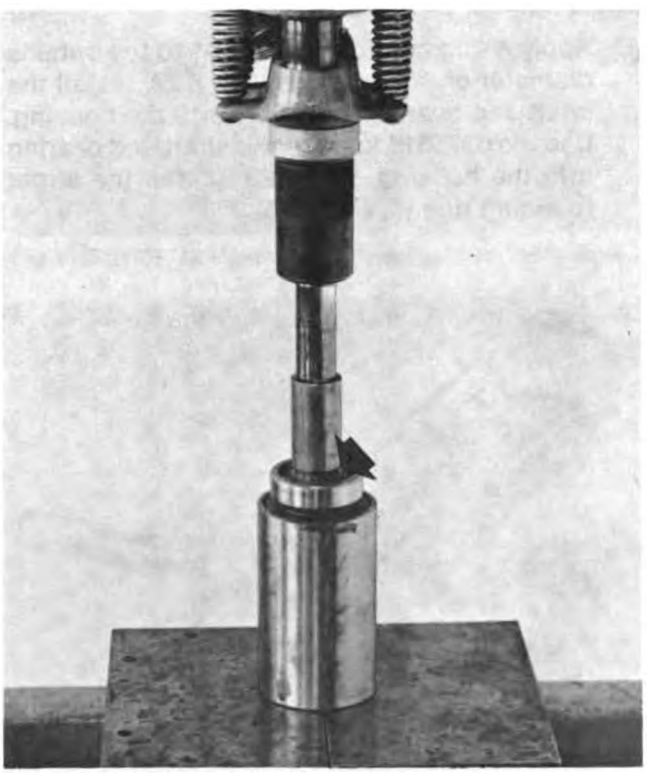

Fig. 8-25 (N10868). Install The Shaft Into The Bearing.

Digitized by Google

end of the shaft through the bearing until the bearing is against the larger diameter of the shaft.

3. Use the Part No. ST-1154 Seal Mandrel to push the small seal (12, Fig. 8-15) into the water pump housing (9). The seal must be even with to 0.015 inch [0.38 mm] below the edge of the bore, Fig. 8-26.

Fig. 8-26 (N10869). Install The Seal Into The Housing.

4. Apply a thin coat of Loctite 601 to the outside diameter of the bearings, Fig. 8-27. Install the shaft and bearing assembly into the housing. Use the 3375318 to push the shaft and bearing into the housing, Fig. 8-28. Install the larger retaining ring (4, Fig. 8-15).

Fig. 8-27 (N10870). Apply Loctite Onto The Bearings.

Fig. 8-28 (N10871). Install The Shaft Assembly Into The Housing.

5. Install the grease fitting. Make sure the grease fitting is clean. Install grease, through the fitting, into the housing until you can see the grease in the opposite pipe plug hole. You must use grease that meets the specifications of MIL-G-3545. Do not use grease that has sodium or soda soap thickeners.

Fig. 8-29 (N10872). Install The Seal Into The Housing.

Digitized by Google

6. Support the water pump housing at the impeller side of the housing. Install the larger grease seal. Use the Part No. ST-1161 Seal Driver to install the seal, Fig. 8-29.
7. Install the idler pulley and bracket assembly to the water pump housing.
8. Support the water pump assembly at the impeller end of the shaft. Push the drive pulley (24, Fig. 8-15) onto the shaft until the pulley is against the bearing.
9. Support drive side of the housing. Apply a coat of Part No. 3375066 Locktite to the outside diameter of the brass part of the seal, Fig. 8-30. Use the Part No. 3375448 Mandrel to push the seal into the housing, Fig. 8-31.

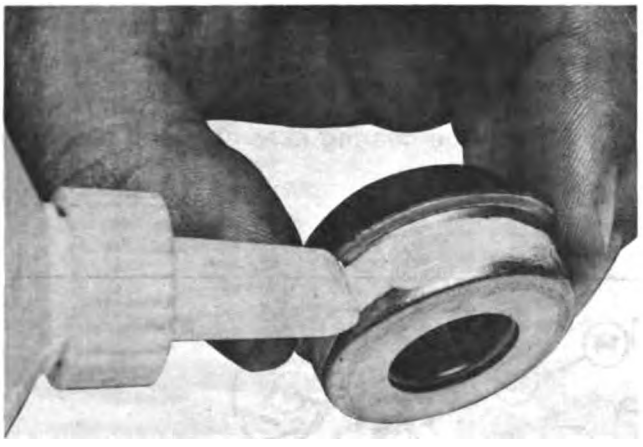

Fig. 8-30 (N10853). Apply Loctite Onto The Seal.

Fig. 8-31 (N10873). Install The Seal Into The Housing.

Fig. 8-32 (UW102). Apply Loctite Between The Shaft And The Cup Seat.

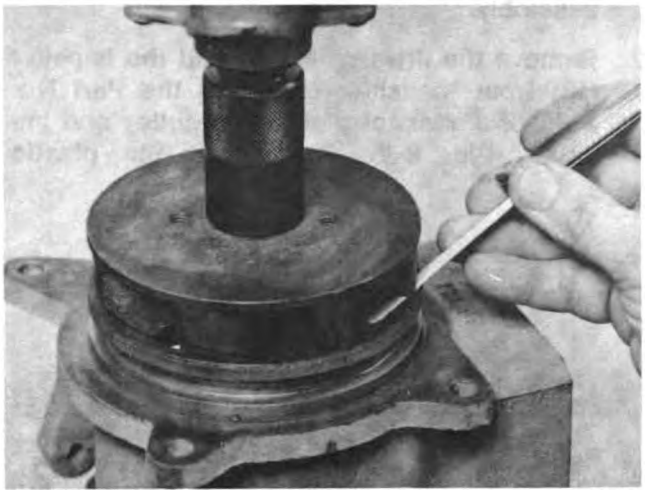

Fig. 8-33 (N10874). Measure The Clearance For The Impeller.

10. Install a new cup seat (14, Fig. 8-15) onto the shaft. Use the 3375448 to push the cup seat onto the shaft.
11. Apply one drop of Loctite 290 to the cup seat. Put the Loctite between the shaft and the cup seat as shown in Fig. 8-32.

Caution: Do not apply more than one drop of the Loctite 290. More than one drop will cause the seal and cup seat to become fastened together.

12. Support the water pump on the pulley end of the shaft. Push the impeller onto the shaft. The minimum clearance between the vanes of the impeller and the housing must not be less than 0.020 inch [0.51 mm]. The maximum

Digitized by Google

clearance must not be more than 0.040 inch [1.02 mm], Fig. 8-33.

Note: The minimum clearance for a plastic (Phenolic) impeller must not be less than 0.030 inch [0.76 mm]. The maximum clearance must not be more than 0.050 inch [1.27 mm].

13. Apply clean lubricating oil to a new O-ring (11, Fig. 8-15). Install the O-ring into the groove in the water pump housing (9). Install the housing (9) to the inlet housing (16). Do not damage the O-ring.

The FFC Water Pump

Disassembly

1. Remove the nut (19, Fig. 8-34) and the adjusting screw (16). Remove the idler pulley assembly.
2. Remove the drive pulley (2) and the impeller (18) from the shaft (10). Use the Part No. 3375265 Puller to remove the pulley and impeller, Fig. 8-35. To remove the plastic (phenolic) impeller that does not have puller holes:
   a. Remove the larger retaining ring that holds the bearing assembly and shaft in the housing.

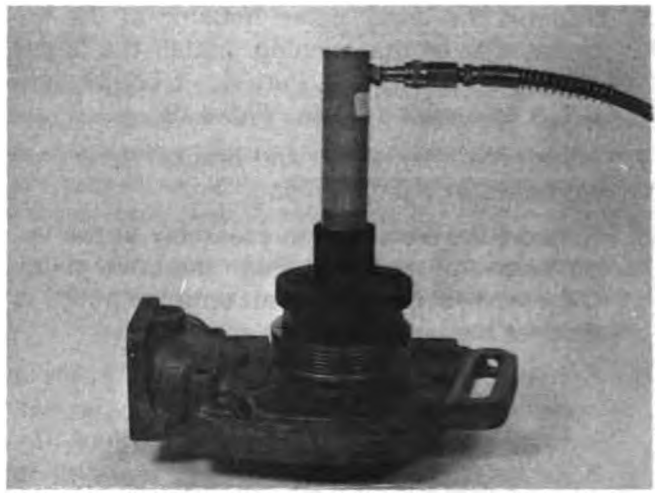

Fig. 8-35 (UW104). Remove The Pulley And Impeller.

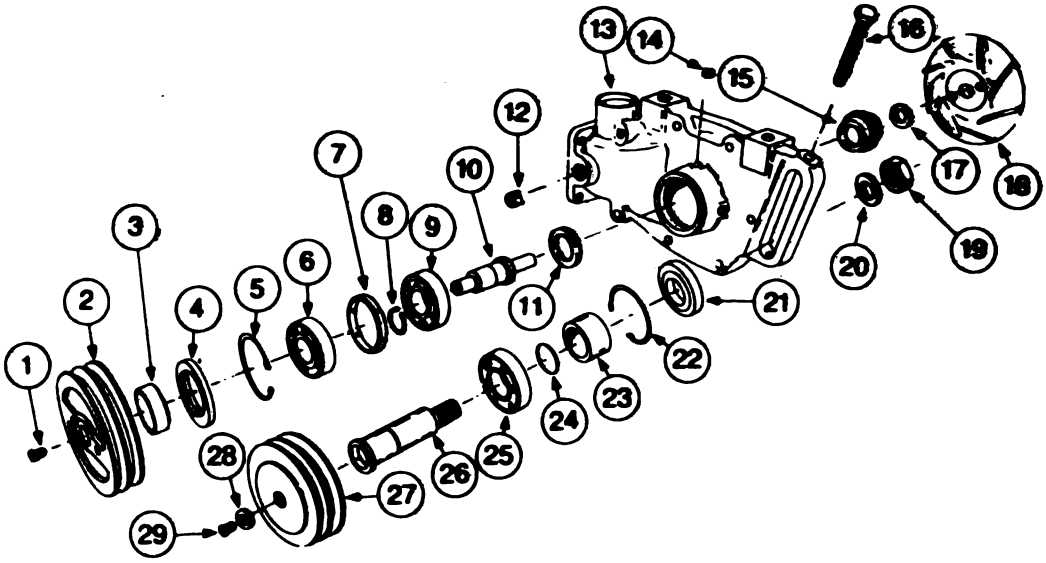

1. Pipe Plug	7. Spacer	13. Water Pump Housing	19. Nut	25. Ball Bearing
2. Pulley	8. Retaining Ring	14. Pipe Plug	20. Spacer	26. Idler Shaft
3. Wear Sleeve	9. Ball Bearing	15. Face Seal	21. Grease Seal	27. Idler Pulley
4. Grease Seal	10. Shaft	16. Adjusting Screw	22. Retaining Ring	28. Washer
5. Retaining Ring	11. Grease Seal	17. Cup Seat	23. Spacer	29. Capscrew
6. Ball Bearing	12. Pipe Plug	18. Impeller	24. O-Ring	

Fig. 8-34 (N10875). (FFC) Water Pump — Exploded View

Digitized by Google

b. Push on the shaft, from the impeller end, to remove the impeller.

3. Remove the grease seal (4, Fig. 8-34) from the housing (13). Use a pry bar to remove the seal, Fig. 8-36. Do not damage the bore.

4. Remove the larger retaining ring (5, Fig. 8-34) that holds the bearing and shaft in the housing.

5. Support the pulley side of the housing. Push on the impeller end of the shaft to remove the bearings and shaft from the housing.

6. Remove the cupseat (17, Fig. 8-34). Use a drift to push the grease seal (11) and face seal (15) from the housing as shown in Fig. 8-37. Discard the cupseat and seals.

7. Use the Part No. ST-1114 Bearing Disassembly Fixture to support the outer bearing (6, Fig. 8-34) and spacer (7). Push the shaft from the bearing and spacer, Fig. 8-38.

8. Remove the retaining ring (8, Fig. 8-34). Use the ST-1114 to support the bearing (9). Push the shaft from the bearing.

9. Hold the spacer of the idler pulley assembly with a vise. The jaws of the vise must have copper plates to prevent damage to the spacer. Lightly hit the shaft with a plastic hammer to push the shaft from the spacer, Fig. 8-39.

10. Remove the oil seal (21, Fig. 8-34) from the

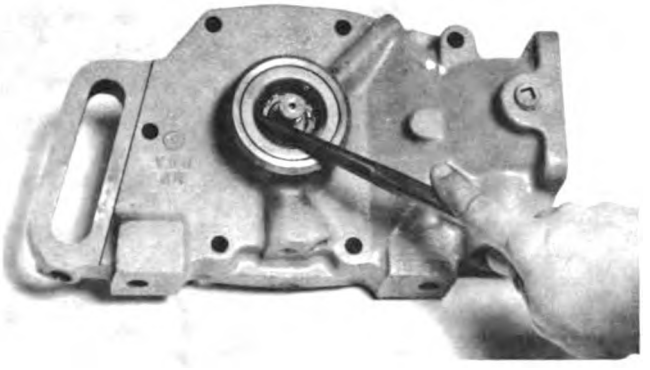

Fig. 8-36 (N10877). Remove The Seal From The Housing.

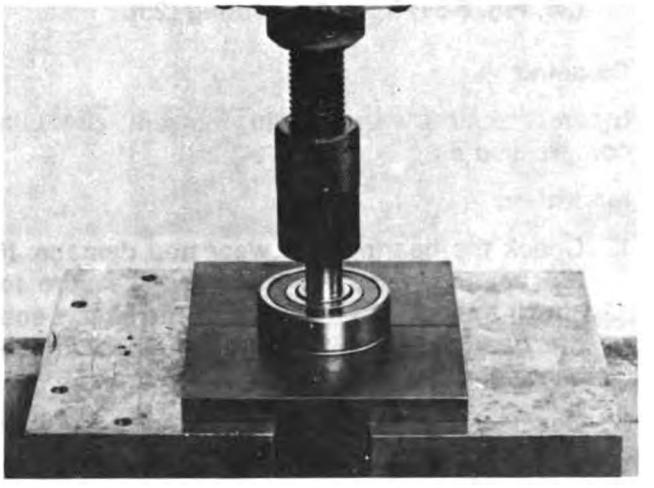

Fig. 8-38 (N10879). Remove The Shaft From The Bearing.

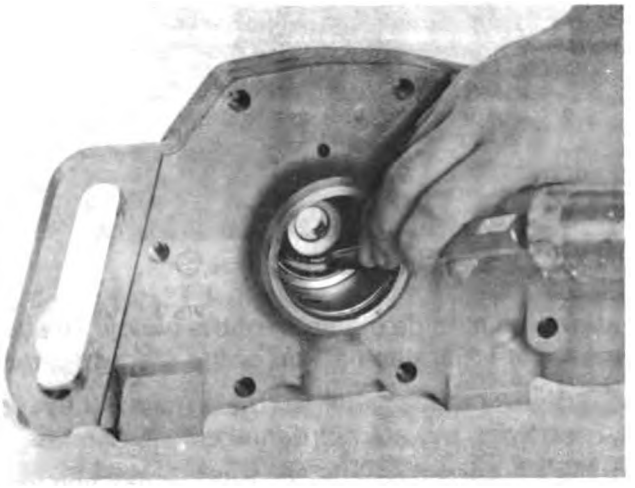

Fig. 8-37 (N10878). Remove The Seal From The Housing.

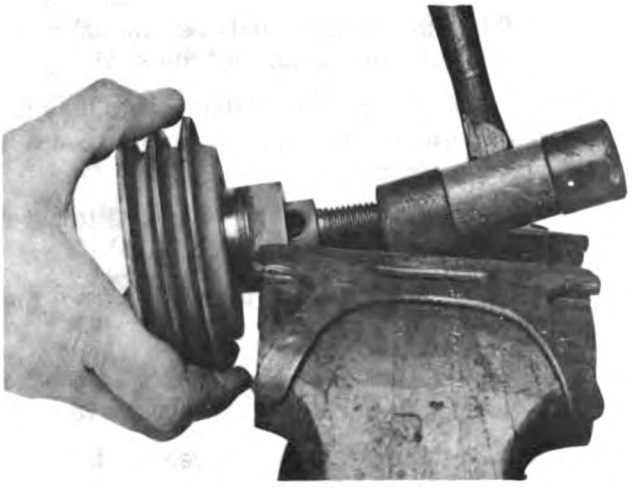

Fig. 8-39 (N10880). Remove The Pulley And Shaft From The Spacer.

Digitized by Google

pulley. Use the round end of a pry bar to remove the seal. Do not damage the bore for the seal.

11. Remove the retaining ring (22).
12. Remove and discard the O-ring (24).
13. Remove the bearing assembly from the pulley.
    a. Remove the plug (29) from the pulley.
    b. Hold the pulley in a vise.
    c. Put the flat end of a punch through the plug hole. Lightly hit the punch with a plastic hammer to push the bearing assembly from the pulley, Fig. 8-40.
14. Use a press and a mandrel to push the shaft (26, Fig. 8-34) from the bearing (25).

Cleaning

Clean the parts with cleaning solvent. Dry with compressed air.

Inspection

1. Check the bearings for wear and damage. If the bearing races are damaged, be sure to check the outside diameter of the shafts and the bearing bores for damage. Discard the bearings after inspection.
2. Check the impeller for cracks, corrosion or damage.
3. Measure the bore in the impeller. Measure the outside diameter of the shaft at the impeller end of the shaft. There must be at least 0.001 inch [0.03 mm] press-fit between the impeller bore and outside diameter of the shaft.
4. Check the wear sleeve of the drive pulley for wear or damage. Remove the wear sleeve if it is worn or damaged.
    a. Use a chisel as shown in Fig. 8-41 to cut a groove into the wear sleeve.
    b. Use a chisel to push the sleeve from the pulley, Fig. 8-42.
    c. Use the Part No. ST-1159 Wear Sleeve Driver to install the new wear sleeve.
5. Check the pulley grooves for wear or damage.

Note: A new belt, pushed down into the groove, must protrude 1/16 to 1/18 inch [0.06 to 0.13 mm] above the outside diameter of the pulley. The belt must not touch the bottom of the groove.

6. Check the shafts to make sure they are straight and are not damaged.
7. Measure the bore in the drive pulley and idler pulley. Measure the outside diameters, at the

Fig. 8-40 (N10881). Remove The Bearing Assembly From The Pulley.

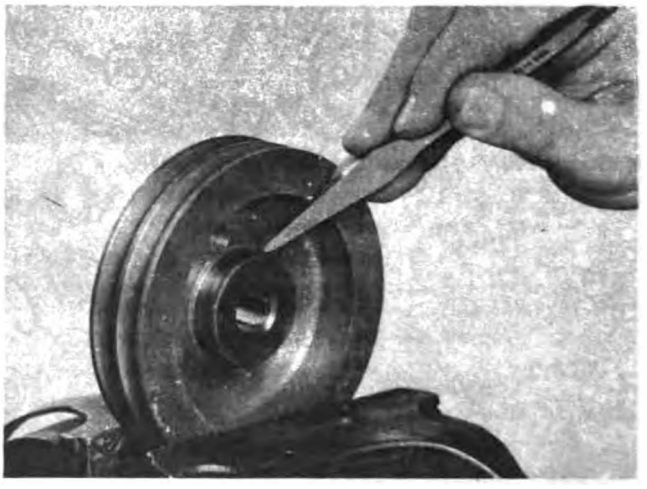

Fig. 8-41 (N10882). Cut The Wear Sleeve.

Digitized by Google

pulley end, of the water pump and idler shafts. There must be at least 0.001 inch [0.03 mm] press fit between the pulley bores and outside diameter of the shafts.

8. Check the water pump housing for damage. Measure the housing bore, Fig. 8-43. Discard the housing if the bearing bore is larger than 2.4494 inches [62.215 mm]. Make sure the weep hole in the housing is open.

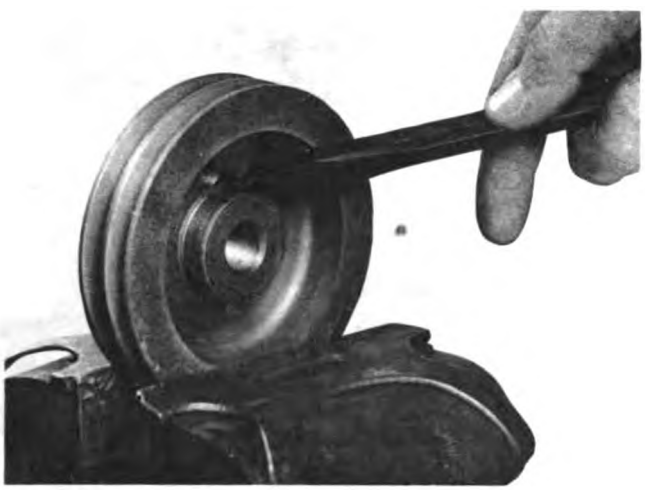

Fig. 8-42 (N10883). Remove The Wear Sleeve From The Pulley.

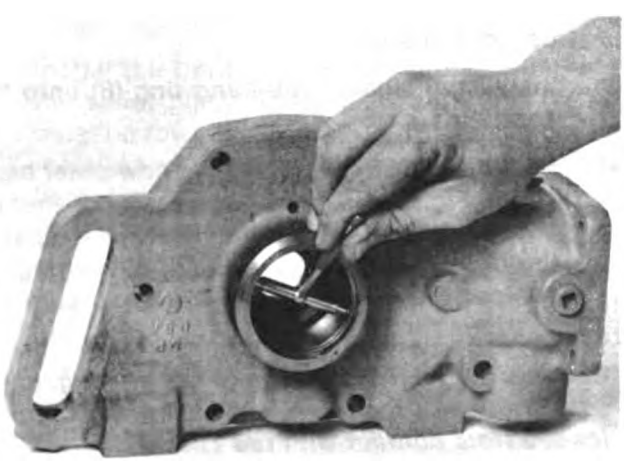

Fig. 8-43 (N10884). Measure The Bore In The Housing.

Assembly

1. Apply a thin coat of clean lubricating oil to the outside diameters of the idler shaft. Install a new bearing onto the shaft. Use the Part No. ST-658 Mandrel to support the bearing, Fig. 8-44.

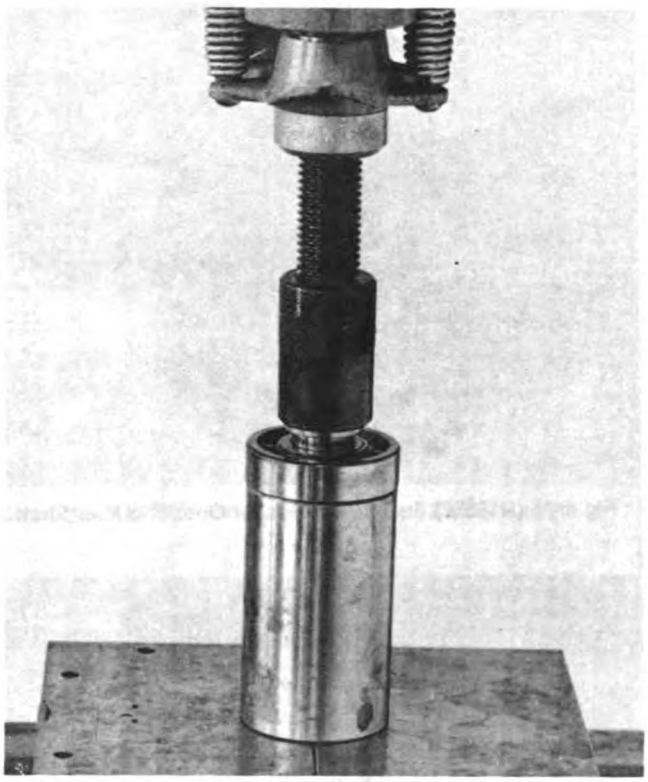

Fig. 8-44 (N10855). Install The Bearing Onto The Shaft.

2. Apply a light coat of Loctite 601 to outside diameter of the bearing. Use a press to push the bearing and shaft into the pulley until the bearing is against the buttom of the bore.
3. Install the retaining ring with the flat side next to the bearing.
4. Install a clean grease fitting into the plug hole in the pulley. Install grease, through the fitting, into the pulley until you can see the grease through the bearing. Remove the fitting and install the plug.
5. Install a new grease seal, with the lip of the seal toward the pulley, into the pulley bore.
6. Apply a light coat of clean lubricating oil to a new O-ring. Install the O-ring into the groove on the shaft.
7. Install the spacer on the shaft. Push the spacer over the O-ring until the spacer is against the bearing, Fig. 8-45.
8. Install the idler pulley assembly to the water pump housing.
9. Support the impeller side of the water pump housing. Put the rear grease seal (11, Fig.

Digitized by Google

Fig. 8-45 (N10886). Install The Spacer Onto The Idler Shaft.

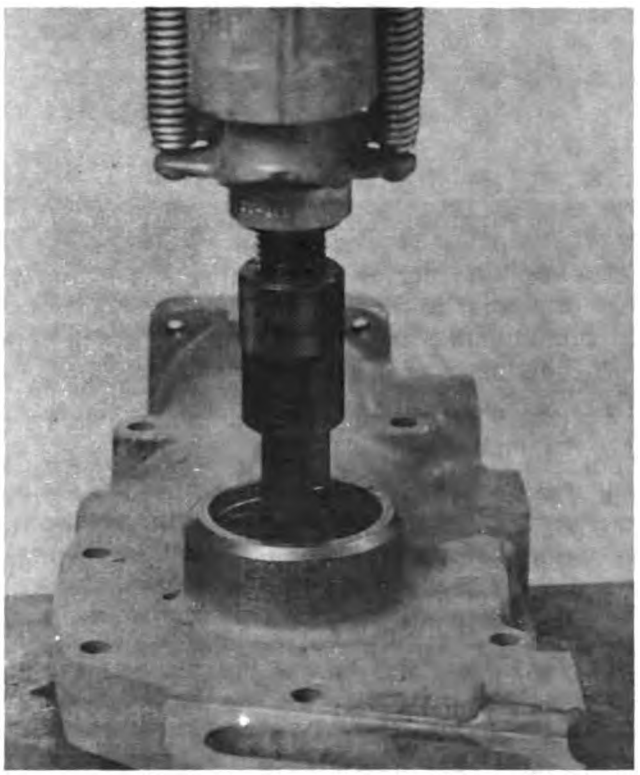

Fig. 8-46 (N10887). Install The Seal Into The Housing.

8-34) onto the Part No. ST-1191 Seal Driver. Make sure the lip of the seal is toward the driver. Push the seal into the bore of the housing until the seal is at the bottom of the bore, Fig. 8-46.

10. Apply a light coat of clean lubricating oil to the shaft (10, Fig. 8-34). Use the ST-658 to support the new inner bearing (9). Push the pulley end of the shaft through the bearing until the bearing is against the larger diameter (shoulder) of the shaft.

Fig. 8-47 (N10888). Install The Bearing Onto The Shaft.

11. Install the smaller retaining ring (8) onto the shaft.

12. Use the ST-658 to support the new outer bearing (6, Fig. 8-34). Install the bearing spacer (7) onto the shaft. Push the shaft and spacer through the bearing until the bearing is against the spacer, Fig. 8-47. Make sure the bearings turn freely.

Caution: To prevent damage to the bearing, make sure the inner race of the bearing is not overloaded from contact with the spacer.

13. Apply a thin coat of Loctite 601 to the outside diameter of the bearings. Install the Part No. 3375180 Oil Seal Pilot to the impeller end of the shaft, Fig. 8-48. Install the bearing and shaft assembly into the bore of the housing. Use the ST-658 to push the bearing and shaft into the housing. Remove the 3375180 pilot.

14. Install the larger retaining ring, with the flat

Digitized by Google

Fig. 8-48 (N10889). Install The Pilot For The Oil Seal Onto The Shaft.

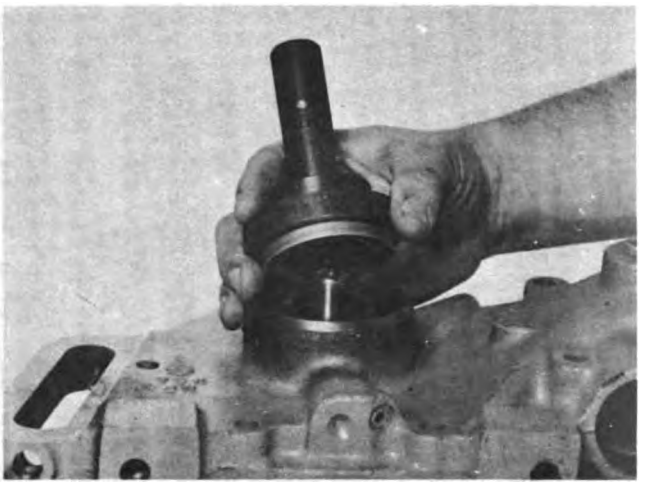

Fig. 8-49 (N10890). Install The Seal Into The Housing.

side toward the bearing, into the groove in the housing.

15. Install a clean grease fitting into the housing. Install grease into the housing, through the fitting, until you can see the grease through the outer bearing (6, Fig. 8-34). You must use grease that meets the specifications of MIL-G-3545. Do not use grease that has thickeners of sodium or soda soap.

Caution: Do not install too much grease. This can cause damage to the bearings.

16. Install the front grease seal (4, Fig. 8-34) into the water pump housing. The lip of the seal must be toward the bearing. The seal must be installed so it is even with the top edge of the bore. Use the Part No. ST-1191 Seal Driver to install the seal, Fig. 8-49.

17. Turn the water pump housing over and support the drive side of the housing. Apply a coat of Part No. 3375066 Loctite to the brass part of the seal outside diameter, Fig. 8-50. Use the Part No. 3375448 Mandrel to install the new seal into the housing.

18. Install the new cup seat (17, Fig. 8-34). Use the 3375448 to install the cupseat, Fig. 8-51.

19. Apply one drop of Loctite 290 to the cup seat. Put the drop of Loctite between the shaft and cup seat, Fig. 8-52.

Caution: Do not apply more than one drop of Loctite. More than one drop will cause the seal and cup seat to become fastened together.

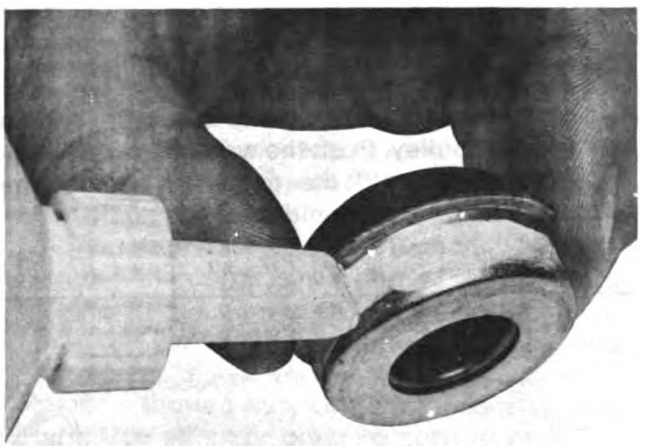

Fig. 8-50 (N10853). Apply Loctite Onto The Seal.

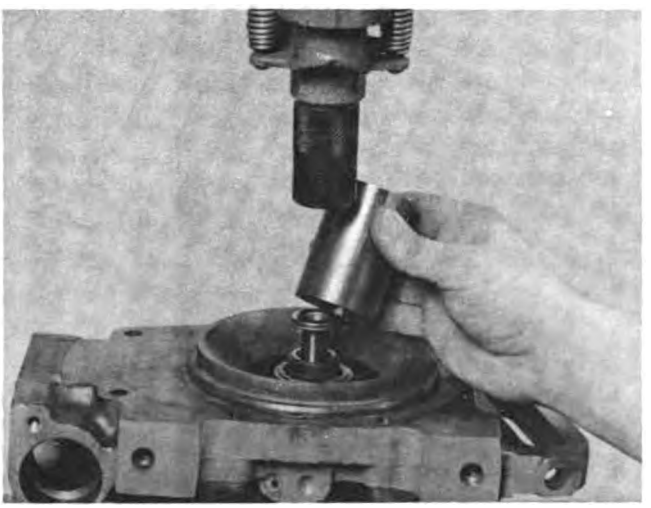

Fig. 8-51 (N10891). Install The Cup Seat.

Digitized by Google

Fig. 8-52 (UW102). Apply Loctite Between The Shaft And The Cup Seat.

20. Remove the grease fitting from the housing. Install the pipe plugs in the housing.

21. Apply a light coat of Loctite 601 to the bore in the drive pulley. Push the water pump shaft into the bore until the pulley is against the larger diameter (shoulder) of the shaft.

22. Apply a light coat of Loctite 601 to the bore in the impeller. Support the pulley end of the shaft. Push the impeller onto the shaft. The clearance between the vanes of the cast iron impeller and the housing must be 0.020 to 0.040 in [0.51 mm to 1.02 mm]. The clearance for the phenolic impeller must be 0.030 to 0.050 inch [0.76 mm to 1.27 mm].

The Fan

Check the fan blades to make sure they are not bent, cracked or have any other damage. Replace the fan if it has any damage.

Warning: Do not try to make any repairs to the fan.

Use steam to clean the fan. Dry with compressed air.

The Fan Hub

Fan Hub with "Step-bore" (without bearing spacer)

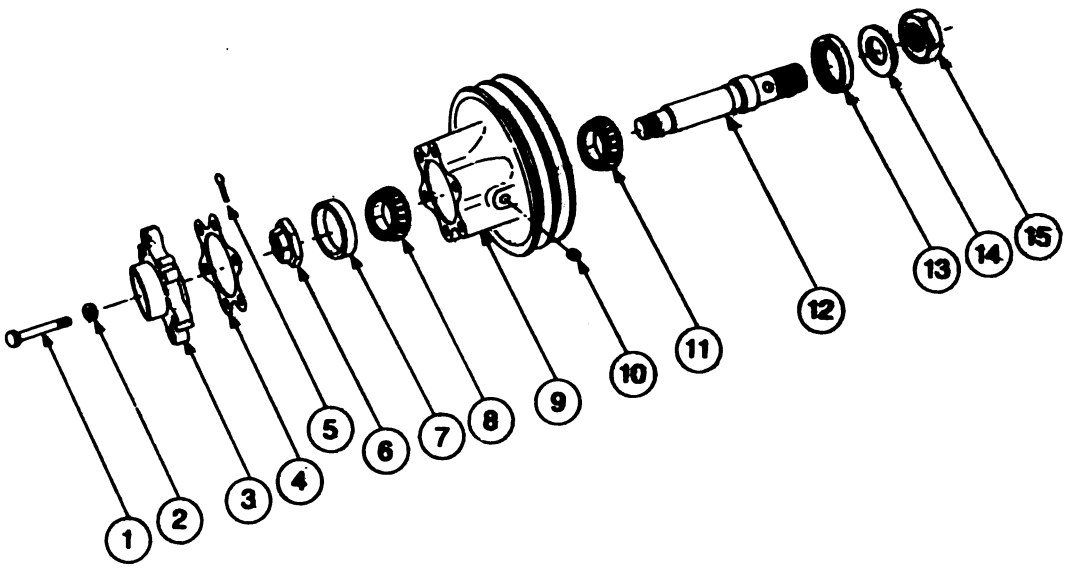

1. Capscrew
2. Lockwasher
3. Spacer
4. Gakset
5. Cotter Pin
6. Slotted Nut
7. Washer
8. Roller Bearing
9. Pulley Hub
10. Pipe Plug
11. Roller Bearing
12. Shaft
13. Seal
14. Washer
15. Nut

Fig. 8-53 (N10895). Fan Hub Assembly — Exploded View

Digitized by Google

Disassembly

1. Remove the pipe plugs, fan spacer (3, Fig. 8-53) and gaskets (4).
2. Remove the cotter pin (5), locknut (6) and washer (7) from the shaft (12).
3. Support the fan hub (9) with smaller end of the shaft up. Push the shaft from the hub.
4. Push the bearings (8 and 11) and oil seal (13) from the shaft.
5. Remove the bearing races from the shaft.

Cleaning

Use cleaning solvent to clean the parts. Dry with compressed air.

Inspection

1. Check the shaft for damage or wear.
2. Check the fan hub and fan spacer for cracks.
3. Check the pulley grooves in the fan hub for wear or damage.

Note: A new belt, when pushed down into the groove, must protrude 1/16 to 1/8 inch [0.06 to 0.13 mm] above the outside diameter of the pulley. The belt must not touch the bottom of the groove.

Replacement

Replace the shaft if it is damaged or worn. Replace the fan hub or fan spacer if cracked or damaged.

Assembly

Note: Apply grease to the bearings, before installation, when they are installed into a fan hub that does not use a grease seal with a lip.

1. Install the outer races for the bearings (8 and 11, Fig. 8-53) into the fan hub (9). Push the outer race, with the cupped side up, into the hub until the race is against the smaller diameter of the bore.
2. Lubricate the rear bearing (11) with grease. Install the bearing into the outer race. Push the seal (13) into the bore. The seal must be installed so it is even with the edge of the pulley bore or, not more than 0.020 inch [0.51 mm] below the edge. Make sure the top of the seal is toward the bearing.
3. Apply a coat of clean lubricating oil to the inside diameter of the seal. Slide the shaft (12) through the seal and bearing.
4. Lubricate the front bearing (8) with grease. Install the bearing into the outer race. Install the washer (7) and locknut (6) to the shaft.
5. Slowly rotate the fan hub while you tighten the locknut. Tighten the locknut until you can feel light fricition against the fan hub.

Note: The hub must be rotated while the nut is being tightened to make sure the bearing is in the correct position.

6. Loosen the locknut only enough to install the cotter pin. Do not bend the cotter pin at this time. If a "huglock" nut is used, loosen the nut approximately 30 degrees.
7. Check the end movement (end clearance of the fan hub. The clearance must be from 0.003 to 0.010 inch [0.08 to 0.25 mm]. If the end movement is more than 0.010 inch [0.25 mm], remove the cotter pin. Tighten the locknut to the next position that will let the cotter pin go through the locknut and shaft. If the end movement is less than 0.003 inch [0.08 mm], support the fan hub. Loosen the locknut one turn. Use an arbor press to push against the locknut end of the shaft. The force against the shaft must not be more than the force required to push a bearing onto a shaft. Repeat steps 5 and 6. Check the end movement of the hub. Bend the cotter pin so it will stay in position.
8. Install a clean grease fitting into the fan hub. Install grease through the fitting until the fan hub cavity is 60 to 70 percent full. Use grease that meets the specifications of MIL-G-3545. Do not use grease that has sodium or soda soap thickeners.
9. Remove the grease fitting. Install the pipe plugs. Tighten the pipe plugs to 5 to 7 ft.-lbs. [7 to 9 N•m] torque.
10. Apply 0.2 to 0.3 oz. [6 to 9 g] of grease to the outer bearing (8, Fig. 8-53]. Install a new gasket (4) and the fan spacer (3).

Digitized by Google

Fan Hub with "Through-bore" (with bearing spacer)

Disassembly

1. Remove the grease fitting (6, Fig. 8-54) and relief fitting (7) from the fan hub (8).
2. Remove the fan spacer (1) and locknut (2).
3. Remove the fan hub from the shaft (12).
4. Remove the front bearing (3) and spacers (4 and 5).
5. Remove the grease seal (11) and the rear bearing (10).
6. To remove the outer races for the bearings (3 and 10), hold a flat punch against the back side of the race. Hit the punch with a hammer until the race is loosened from the bore. Remove the races. Remove the retaining ring (9) from the bore.

Cleaning

Clean the parts with cleaning solvent. Dry with compressed air.

Inspection

1. Check the shaft for damage or wear. Replace the shaft if it is damaged or worn.
2. Check the fan hub and fan spacer for damage.
3. Check the pulley grooves in the fan hub for wear or damage.

Note: A new belt, when pushed down into the groove, must protrude 1/16 to 1/8 inch [0.06 to 0.13 mm] above the outside diameter of the pulley. The belt must not touch the bottom of the groove.

Replacement

Replace the fan hub or fan spacer if cracked or damaged.

Assembly

1. Install the new retaining ring (9, Fig. 8-54) into the groove in the fan hub bore.
2. Install the outer race of the bearing (10) into the fan bracket end of the fan hub. Push the race into the bore until the race is against the retaining ring.

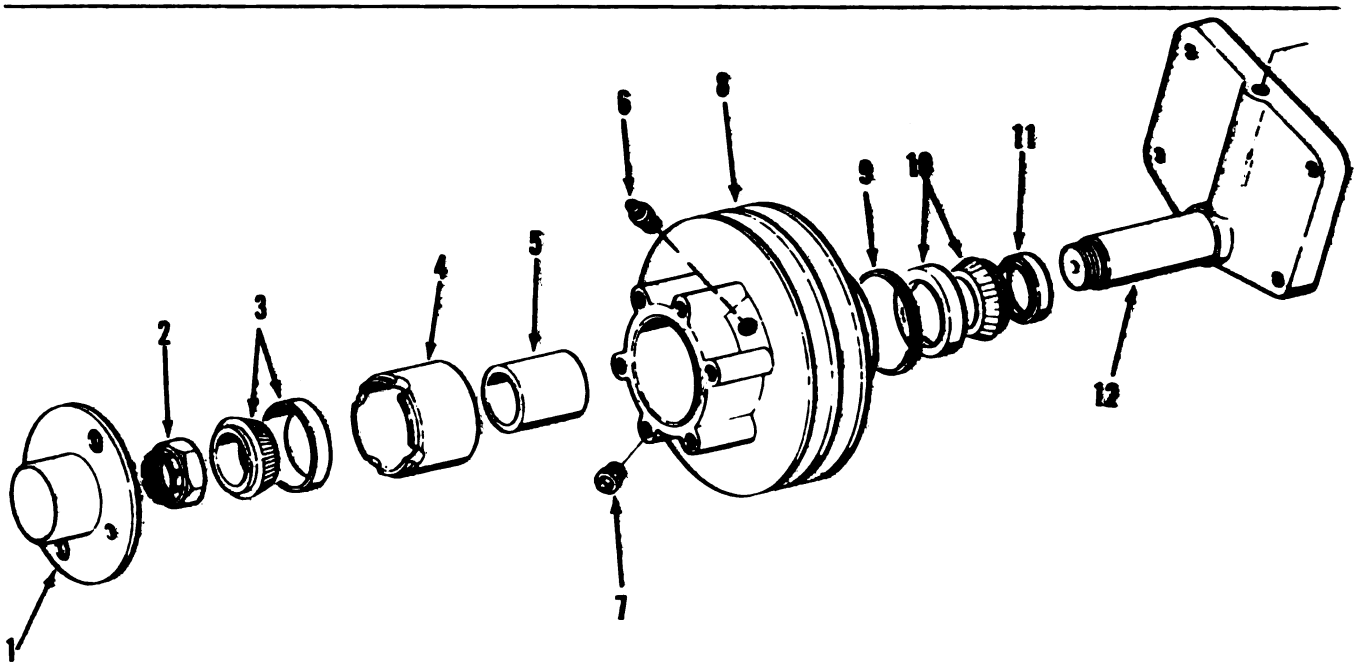

1. Cover
2. Locknut
3. Bearing
4. Bearing Spacer
5. Inner Spacer
6. Grease Fitting
7. Relief Fitting
8. Fan Hub Pulley
9. Snap Ring
10. Bearing
11. Seal
12. Fan Hub Shaft

Fig. 8-54. Fan Hub Assembly With Bearing Spacer.

Digitized by Google

3. Install the bearing spacer (4) into the fan hub. Install the spacer from the fan spacer end of the hub. Make sure the holes in the spacer are in alignment with the grease holes in the hub.

4. Install the outer race of the bearing (3) into the fan spacer end of the fan hub. Push the race into the bore until the race is against the bearing spacer. Do not damage the retaining ring when you push the race against the spacer.

5. Lubricate the rear bearing (10) with grease. Install the bearing into the outer race. Push the seal (11) into the bore. The seal must be installed so it is even with the edge of the bore or, not more than 0.020 inch [0.51 mm] below the edge. Make sure the lip of the seal is toward the bearing.

6. Apply a coat of clean lubricating oil to the inside diameter of the seal. Slide the shaft (12) through the seal and bearing.

7. Install the inner spacer (5) into the fan spacer end of the fan hub. Slide the spacer over the shaft and into the outer spacer (4).

8. Lubricate the front bearing (3) with grease. Install the bearing into the outer race.

9. Install the washer and locknut (2) to the shaft. Tighten the locknut to 145 to 155 ft.-lbs. [196 to 210 N•m] torque. Rotate the fan hub while tightening the locknut.

10. Check the end movement (end clearance) of the fan hub. The fan hub must rotate freely and the end clearance must not be less than 0.003 inch [0.08 mm] or more than 0.016 inch [0.41 mm].

    a. If the end clearance is not correct, check the width of the bearings (3 and 10). The bearing width can be from 0.710 to 0.714 inch [18 to 18.1 mm]. If the bearing width is more than 0.714 inch [18 mm], remove material from the end of the bearing spacer (4) to adjust the end clearance. Remove material from the end of the spacer that does not have grease holes.

11. Fill the fan hub with grease until it is 60 to 70 percent full.

12. Install the pipe plugs. Tighten to 5 to 7 ft.-lbs. [7 to 10 N•m] torque.

The Thermostat and Housing

Never operate the engine without the thermostat. The thermostat helps control the temperature of the combustion chamber in the engine.

Disassembly

1. Remove the connection for the water outlet (7, Fig. 8-55) and the gasket (6).

2. Remove the front water manifold (1) and gasket (2).

3. Remove the thermostat (3) and seal (4) from the housing (5).

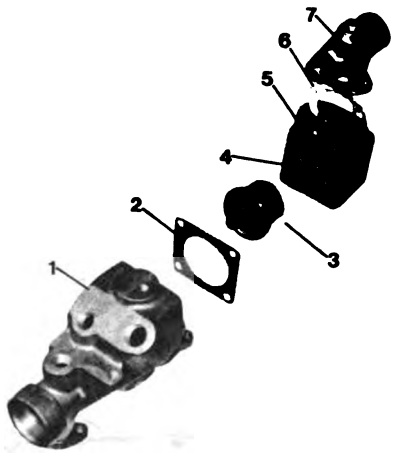

Fig. 8-55 (N10814). The Thermostat Housing And Seal.

Inspection

1. Check the connection, manifold and housing for corrosion, cracks or other damage.

2. Check the operation of the thermostat.

    a. Check the body of the thermostat to find at what temperature the thermostat is in the open position.

    b. Put the thermostat and a thermometer into a container of water. Use a device to hold the thermostat and thermometer so that they will not touch the container.

    c. Heat the water. The thermostat must begin to open when the temperature of the water is at the same temperature marked on the body of the thermostat.

    d. Continue to heat the water until the temperature is 15° to 20°F [8.3° to 11.1°C]

Digitized by Google

more than the value marked on the thermostat. At this temperature, the thermostat must be fully opened. The thermostat is fully opened when there is at least a 0.375 in. [9.5 mm] space between the seal sleeve and the brass part of the thermostat.

Replacement

Replace the thermostat if it does not operate in the correct temperature range.

Assembly

1. Install the new seal (4, Fig. 8-55) into the thermostat housing (5). Use the Part No. ST-1225 Seal Mandrel to install the seal. Make sure the part number or metal side of the seal is against the mandrel when you install the seal.

Note: Make sure the seal is correctly installed. If the seal is not correctly installed, engine coolant can leak past the seal when the thermostat is in the closed position. This can cause the engine temperature to be colder than normal.

2. Install the thermostat into the housing. Slide the sleeve of the thermostat through the seal.
3. Install the front water manifold (1) and a new gasket (2) to the thermostat housing.
4. Install the water outlet connection (7) and a new gasket (6) to the thermostat housing.

The Raw Water or Sea Water Pump

Disassembly

1. Remove the pump drive gear or pulley. Use the Part No. 3375257 Puller to remove the gear or pulley. Remove the key (10, Fig. 8-56) from the shaft (9).
2. Remove the retaining ring (13). If the pump is driven by a belt, you must remove the rubber seal (14) before you can remove the retaining ring.
3. Remove the cover (1) and gasket (2). Remove the rubber plug (3) and the impeller (4).

Note: If the pump is to be installed in the original position. Take notice of the direction of the impeller blades. This will help you to correctly assemble the pump.

4. Push the shaft (9) from the pump housing (7).

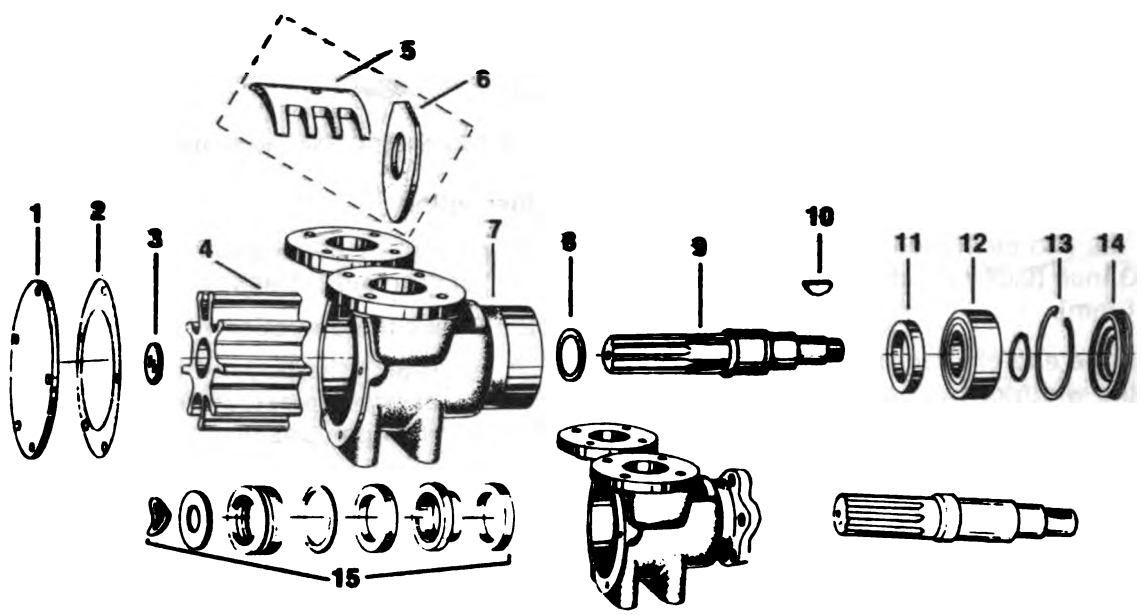

1. Cover
2. Gasket
3. Plug
4. Impeller
5. Cam
6. Wear
7. Housing
8. Slinger
9. Shaft
10. Key
11. Oil Seal
12. Bearing
13. Snap Ring
14. Rubber Seal
15. Seal Assembly

8-56 (N10806). Raw (Sea) Water Pump — Exploded View.

Digitized by Google

Remove the slinger (8).

5. Remove the cam (5) and wear plate (6).
6. Remove the seal assembly (15).

Cleaning

Clean all parts with cleaning solvent. Dry with compressed air.

Inspection

1. Check the impeller for scratches, cracks or other damage.
2. Check the surfaces of the cam and wear plate. The surfaces must be smooth.
3. Check the shaft for wear and damage.
4. Check the housing for cracks or other damage.

Replacement

Replace any damaged parts.

Assembly

1. Apply lubricant to the shaft (9, Fig. 8-56). Push the bearing (12), with the part number up, onto the shaft. Push the bearing until it is against the larger diameter (shoulder) of the shaft.
2. Install the key (10) into the shaft.
3. Push the oil seal (11) into the drive side of the housing as shown in Fig. 8-57.

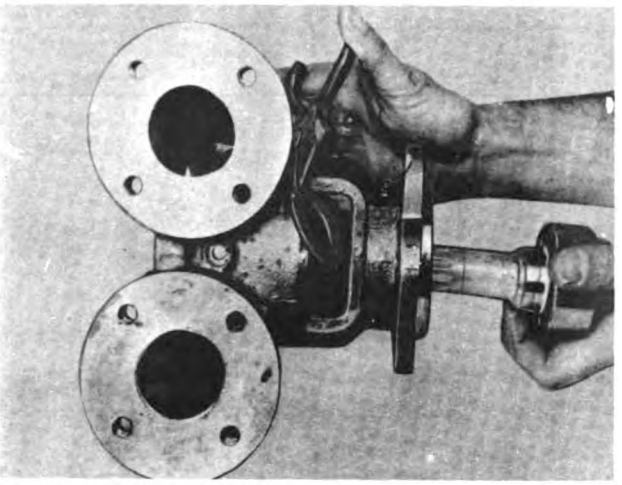

Fig. 8-58 (N20806). Install The Shaft Into The Housing.

4. Hold the rubber slinger (8) in the correct position in the housing. Install the shaft into the housing and through the slinger as shown in Fig. 8-58.
5. Push the bearing and shaft assembly into the bore in the housing. Make sure you push against the outer race of the bearing.
6. Install the retaining ring (13, Fig. 8-56).
7. Install the seal gasket, seat, carbon seal, O-ring, ferrule, washer and marcel washer (The Seal Assembly, 15, Fig. 8-56) onto the shaft and then into the housing bore.
8. Push the new oil seal into the housing bore. The lip of the seal must be toward the impeller.

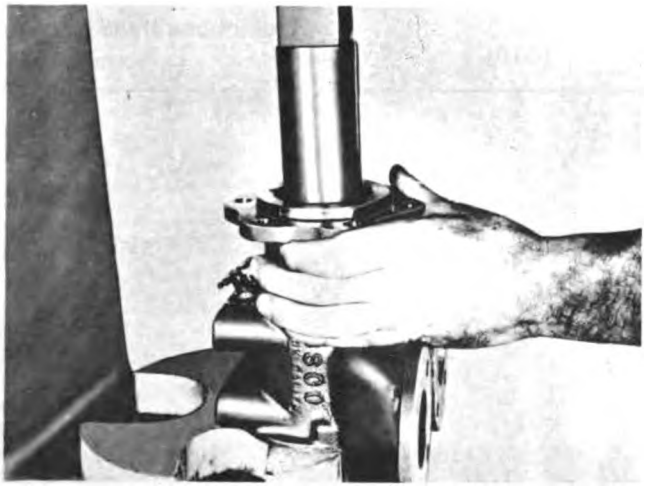

Fig. 8-57 (N20809). Install The Oil Seal Into The Housing.

Fig. 8-59 (N20807). Install The Cam And Wear Plate.

Digitized by Google

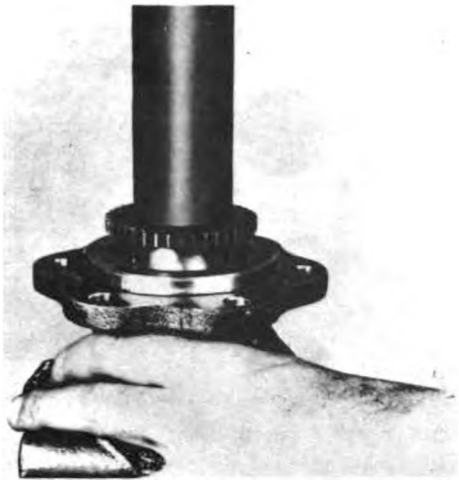

Fig. 8-60 (N20808). Install The Drive Gear Onto The Shaft.

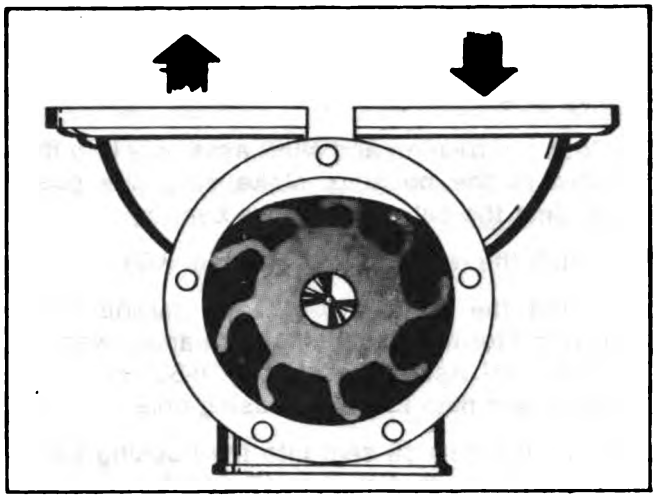

Fig. 8-61 (N20810). The Impeller Installed For Right Hand Rotation.

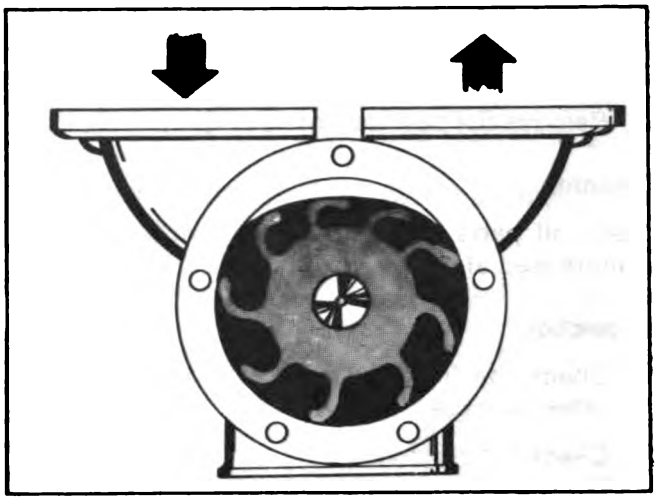

Fig. 8-62 (N20810). The Impeller Installed For Left Hand Rotation.

9. Install the cam (5) and wear plate (6) as shown in Fig. 8-59.

10. Use an oven to heat the drive gear to 200°F [93°C]. Support the impeller end of the shaft. Push the drive gear onto the shaft, Fig. 8-60.

11. Apply glycerine or soap to the edges of the impeller blades. Install the impeller. Install the rubber plug (3, Fig. 8-56).

Note: The direction of the water flow through the pump is controlled by the direction of the impeller blades. Make sure the impeller is installed correctly. Fig. 8-61 and Fig. 8-62 shows the direction of the water flow through the pump.

12. Install a new gasket (2, Fig. 8-56) and the cover (1).

Digitized by Google

Table 8-1: Specifications — Inch [mm] Eccentric and FFC Water Pump

Ref. No.	Dimension Locations	New Minimum	New Maximum	Worn Limit
	Housing Bearing Bores	2.4408 [61.996]	2.4414 [62.012]	2.4494 [62.215]
	Housing Bore Carbon Face Seal	1.5000 [38.100]	1.5200 [38.608]	
1.	**Shaft Diameter** Impeller End	0.6262 [15.905]	0.6267 [15.918]	
2.	**Shaft Diameter** Seat Location	0.6262 [15.905]	0.6267 [15.918]	
3.	**Shaft Diameter** Inner Bearing	0.9843 [25.001]	0.9847 [25.011]	
4.	**Shaft Diameter** Outer Bearing	0.9843 [25.001]	0.9847 [25.011]	
5.	**Shaft Diameter** Pulley End	0.6693 [17.000]	0.6696 [17.008]	
6.	**Impeller Bore**	0.624 [15.85]	0.625 [15.88]	
	Impeller Vane to Body Clearance			
	(Cast Iron)	0.020 [0.51]	0.040 [1.02]	
	(Phenolic)	0.030 [0.76]	0.050 [1.27]	
	Pulley Bore Diameter	0.6663 [16.924]	0.6673 [16.949]	
	Minimum Press-Fit Between:			
	Shaft and Impeller	0.001 [0.03]		
	Shaft and Pulley	0.001 [0.03]		

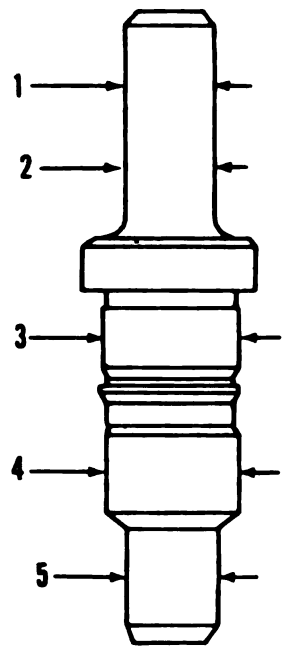

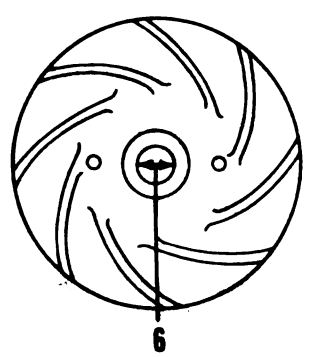

Digitized by Google

Table 8-1: Specifications — Inch [mm] Eccentric and FFC Water Pump (Cont'd.)

Ref. No.	Dimension Locations	New Minimum	New Maximum	Worn Limit
	Housing Bore Outer Bearing	2.8345 [71.996]	2.8351 [72.012]	2.8431 [72.215]
	Housing Bore Inner Bearing	2.0471 [51.996]	2.0477 [52.012]	2.0557 [52.215]
	Housing Bore Carbon Face Seal	1.435 [36.45]	1.436 [36.47]	
	Housing Bore Outer Seal	2.9985 [76.162]	3.0015 [76.238]	
	Housing Bore Inner Seal	1.374 [34.90]	1.376 [34.95]	
1.	**Shaft Diameter** Impeller End	0.6262 [15.905]	0.6267 [15.918]	
2.	**Shaft Diameter** Seat Location	0.6262 [15.905]	0.6267 [15.918]	
3.	**Shaft Diameter** Inner Seal	0.872 [22.15]	0.878 [22.30]	
4.	**Shaft Diameter** Inner Bearing Surface	0.9842 [24.999]	0.9846 [25.009]	
5.	**Shaft Diameter** Outer Bearing Surface	1.1810 [29.997]	1.1814 [30.008]	
6.	**Shaft Diameter** Pulley End	1.1810 [29.997]	1.1814 [30.008]	
7.	**Impeller Bore**	0.624 [15.85]	0.625 [15.88]	
	Impeller Vane to Body Clearance	0.020 [0.51]	0.040 [1.02]	
	Pulley Bore	1.1787 [29.939]	1.1798 [29.967]	
	Wear Sleeve O.D. Outer Seal Surface	2.2540 [57.252]	2.2560 [57.302]	
	Minimum Press-Fit Between:			
	Shaft and Impeller	0.001 [0.03]		
	Shaft and Pulley	0.001 [0.03]		

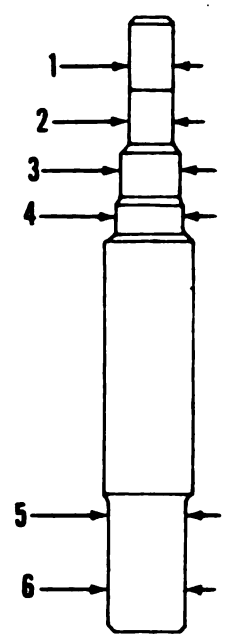

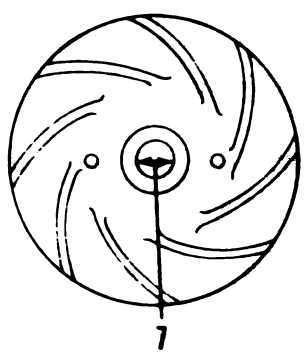

Digitized by Google

Group 9

The drive unit takes power from the crankshaft, through the camshaft gear, to actuate the fuel pump, air compressor and other assemblies.

Drive Units

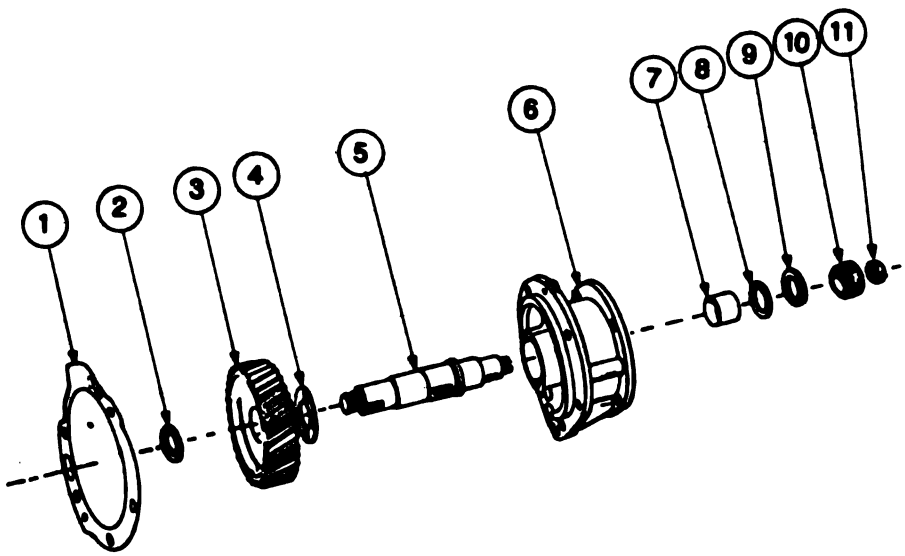

1. Gasket
2. Oil Slinger
3. Drive Gear
4. Thrust Washer
5. Shaft
6. Housing
7. Bushing
8. Thrust Washer
9. Clamping Washer
10. Coupling
11. Locknut

Fig. 9-1 (N10910). Fuel Pump Drive — Exploded View.

Service Tools (Or Equivalent) Required	
Service Tool Number	Tool Name
ST-1249	Puller

Standard Tools Required	
Arbor Press	Feeler Gauge Set
Grease Gun	0-1, 1-2, 2-3 Micrometers
Bearing Packer	Telescoping Gauges

General Information

Oil Seals

The surface of the seal must be free of damage. Before installing a new seal, always check the surface of the hub sleeve for wear and replace the sleeve if necessary.

Digitized by Google

The Bores In The Housing

The bearings or bushings must not turn in the housing retaining bore. If the old bearing has turned and ruined the housing, the housing must be discarded. The bore of the housing must be clean before you press the bearing in position.

Caution: LDL (Laydown Lip) TFE oil seals must be clean and dry when they are installed. Do not apply lubricating oil to the seal or shaft.

Thrust Washers

On accessory drive units the grooved side of the washer is installed away from housing. The steel backing against the cast iron housing will keep the thrust washers from turning. Incorrect installation of these washers will result in excessive wear and increased end play, which causes early failure of the accessory drive assembly.

Accessory Drive

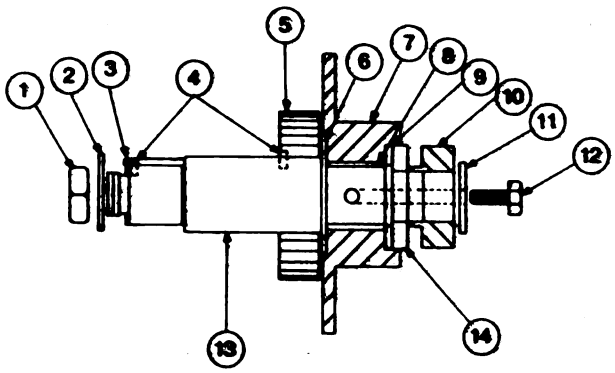

1. Nut
2. Washer
3. Seal
4. Dowels
5. Gear
6. Thrust Washer
7. Housing
8. Bushing
9. Thrust Washer
10. Coupling
11. Washer
12. Capscrews
13. Shaft
14. Washer

Fig. 9-2 (N10911). Cross Section Of The Accessory Drive.

Disassembly

1. Remove the capscrew (12, Fig. 9-2) and washer (11) from the shaft. Install the capscrew (12) into the shaft after you have removed the washer.
2. Install the Part No. ST-1249 Coupling Puller onto the coupling (10). Remove the coupling.
3. Remove the washer (14).
4. Remove the thrust washers (6 and 9).
5. Remove the shaft and gear assembly (13 and 5) from the housing (7).
6. Remove the gear (5) from the shaft (13). Put the housing side of the gear onto a support and use a press to push the shaft from the gear. Remove the pulley key or pin from the shaft before you push the shaft from the gear.

Cleaning

Clean all the parts in an approved cleaning solvent and dry with compressed air.

Inspection

1. Check the bushing in the drive housing. If the bushing is worn larger than 1.321 remove and discard the bushing.
2. Check the shaft for wear distortion or damage. The outside diameter of shaft must not be worn less than 1.310 inch [33.27 mm].

Replacement

Replace the thrust washers if they are worn or damaged.

Assembly

1. Install the dowel or key into the shaft (13, Fig. 9-2).
2. Install the gear (5) onto the shaft. Use a press to push the gear onto the shaft. Push the gear onto the shaft until the gear is against the shoulder on the shaft.
3. Apply a coat of lubricating oil to the thrust washer (6) and the bushing (8) in the housing.
4. Install the gear and shaft assembly through the thrust washer and into the bushing in the housing. The grooved side of the thrust washer must be away from the housing.
5. Turn the assembly over so that the gear on the shaft is down. Make sure that the thrust washer (6) remains in position.

Digitized by Google

6. Apply a coat of lubricating oil to the rear thrust washer (9). Install the thrust washer. The grooved side of the thrust washer must be away from the housing.
7. Install the clamping washer (14).
8. Install the coupling (10). Use a press to push the coupling onto the shaft. Do not damage the threads on the shaft.
9. Install the washer (11) and capscrew (12). Tighten the capscrew to 30 to 35 ft.-lbs. [41 to 47 N•m] torque.

Note: Check end clearance with unit assembled. It must be as listed in Table 9-1. The dowel pin shaft can be used to replace the 121940 and 199969 Accessory Drive Shafts.

Hydraulic Governor Drive

Disassembly

1. Remove the governor drive assembly, snap ring (11, Fig. 9-3), ball key and collar (13).
2. Press the shaft (12) opposite gear end to remove all units from housing (14), separate drive gear (2) and support assembly from reservoir (21); then remove drain plug, dipstick, vent plug and elbow.
3. Remove the shaft locknut (22) and washer (23) from the drive shaft (31). Use the ST-1249 Puller to remove the coupling (24). Lift the key out (30). Remove the spacer (25) and governor drive gear (26).
4. Press the small end of the shaft to remove the shaft from the support (3) and the large end of the shaft to remove the drive gear (2). Remove keys (32) from the shaft keyway and snap ring (27) from the support. Invert support and press out rear bearing (28) and oil seal (29).

Inspection

1. Check bearing for worn race or rough action, gears for chipped or broken teeth or uneven wear and governor shaft housing oil holes to make certain they are open.
2. Inspect support and reservoir for cracks, breaks or rough mating surfaces.

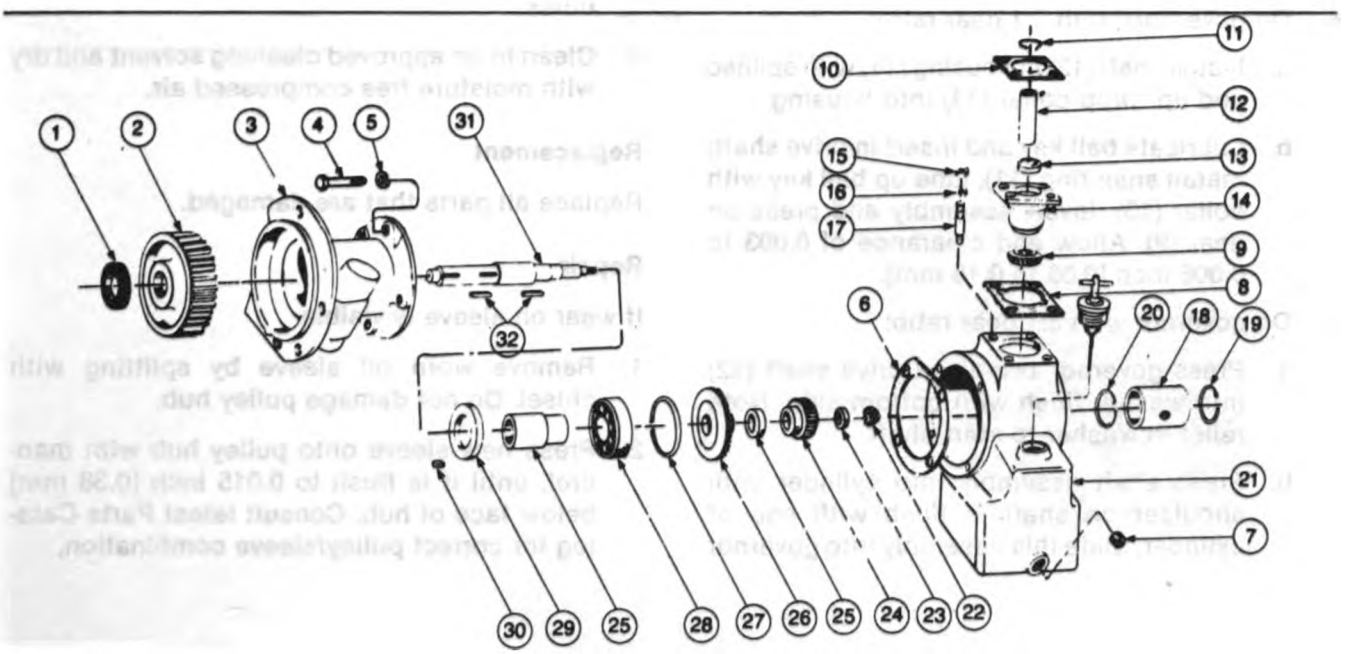

1. Slinger
2. Drive Gear
3. Support
4. Capscrew
5. Lockwashers
6. Gasket
7. Pipe Plug
8. Gasket
9. Gear
10. Gasket
11. Snap Ring
12. Shaft
13. Collar
14. Housing
15. Nuts
16. Lockwashers
17. Studs
18. Coupling
19. Snap Ring
20. Snap Ring
21. Reservoir
22. Locknut
23. Flatwasher
24. Coupling Gear
25. Spacer
26. Drive Gear
27. Snap Ring
28. Bearing
29. Oil Seal
30. Key
31. Shaft
32. Keys

Fig. 9-3 (N10912). Fuel Pump, Hydraulic Governor Drive (Woodward Governor).

Digitized by Google

Replacement

Replace all damaged parts.

Assembly

1. Lubricate outside of oil seal (29, Fig. 9-3) and press into support from large end. Open end of seal must be down. Lubricate rear bearing (28) and press into support. Insert snap ring (27), flat side down.
2. Lubricate shaft (31) and place key (32) in shaft. Press shaft into flat side of gear (2) until shoulder seats on gear face.
3. Press small end of shaft assembly into large end of support. Press governor drive gear (26) onto shaft until it bottoms on bearing.
4. Insert key (30) and press on coupling (24). Shoulder of coupling goes against gear unless a spacer (25) is used. Install flatwasher (23) and shaft locknut (22).
5. Position reservoir (21) in vise with governor drive studs (17) up. Install dipstick, vent plug, weatherhead fitting and drain plug.
6. On governors with 2:1 gear ratio:
   a. Install shaft (12) in housing (14) with splined end up. Drop collar (13) into housing.
   b. Lubricate ball key and insert in drive shaft: Install snap ring (11). Line up ball key with collar (13). Invert assembly and press on gear (9). Allow end clearance of 0.003 to 0.006 inch [0.08 to 0.15 mm].
7. On governor with 3:1 gear ratio:
   a. Press governor two-piece drive shaft (12) into washer flush with bottom side. Note relief in washer to start shaft.
   b. Press shaft assembly into cylinder until shoulder on shaft is flush with end of cylinder. Slide this assembly into governor drive housing so flatwasher rests on bronze bushing.
   c. Invert assembly and install ball key, collared washer (13) and snap ring (11). Press on end of cylinder until flatwasher is against bronze bushing.
   d. Press gear into position allowing end clearance of 0.003 to 0.006 inch [0.08 to 0.15 mm].
8. Place gaskets (8) and install drive gear and housing assembly to serial number side of reservoir. Large oil hole in housing must be at top. Install slinger (1) over gear end of shaft.

Drive Pulleys

Inspection

1. Check for cracks and ships in hub, web and groove areas.
2. Check for wear in grooves and oil seal sleeve.
3. On two-piece pulleys, check for stripped or distorted threads on sheave and in capscrew holes.
4. Clean in an approved cleaning solvent and dry with moisture free compressed air.

Replacement

Replace all parts that are damaged.

Repair

If wear on sleeve is visible:

1. Remove worn oil sleeve by splitting with chisel. Do not damage pulley hub.
2. Press new sleeve onto pulley hub with mandrel, until it is flush to 0.015 inch [0.38 mm] below face of hub. Consult latest Parts Catalog for correct pulley/sleeve combination.

Digitized by Google

Table 9-1: Drive Unit Specifications — Inch [mm]

Ref. No.	Measurement	Worn Limit	New Minimum	New Maximum
1.	**Shaft**			
	Outside Diameter (Bushing Location)	1.310 [33.27]	1.3115 [33.312]	1.312 [33.32]
	Bushing			
	Inside Diameter	1.321 [33.55]	1.316 [33.43]	1.319 [33.50]
	Outside Diameter		1.449 [36.80]	1.450 [36.83]
	Out-of-Round	0.002 [0.05]		
	Press-Fit Between Housing and Bushing		0.002 [0.05]	0.0045 [0.11]
	Accessory Drive			
	End Clearance NH/NT		0.002 [0.05]	0.012 [0.26]
	End Clearance NTA		0.004 [0.10]	0.024 [0.61]
	Hydraulic Governor Drive			
	End Clearance		0.003 [0.08]	0.006 [0.15]

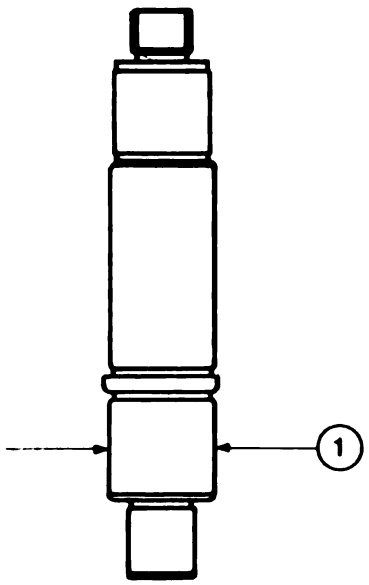

Digitized by Google

Digitized by Google

Group 10

The air intake section includes intake manifolds, connections and aftercoolers. The information about cold starting and air cleaners is found in the Operation and Maintenance Manuals. The information about the turbochargers is found in the Turbocharger Component Shop Manual.

Air Intake System

The Intake Manifold and Connection

Cleaning

Clean the intake manifold and the connection with steam.

Inspection

Check for cracks, distortions and damaged threads.

Repair

Threads which are damaged can be repaired by installing Heli-coils.

The Aftercooler

Disassembly

1. Remove the water inlet and water outlet connections. Discard the gaskets.
2. Remove the element cover and the element from the housing. Discard the gaskets.
3. Remove and discard the O-rings from the element.

Cleaning

1. Clean the element cover and housing with steam.
2. Use a solvent that will not damage copper to clean the element. Dry with compressed air.

Note: The aftercooler elements generally are taken to a qualified radiator repair shop to be cleaned, tested and repaired.

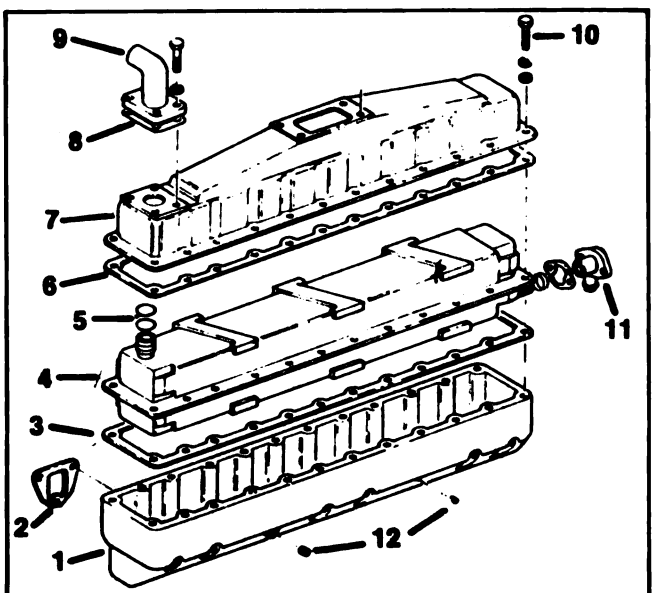

1. Housing
2. Intake Manifold Gasket
3. Gasket
4. Element
5. O-rings
6. Cover Gasket
7. Cover
8. Gasket
9. Water Outlet Connection
10. Capscrews
11. Water Inlet Connection
12. Plugs

Fig. 10-1 (N10898). Aftercooler — Exploded View.

Assembly

1. Put the aftercooler housing (1, Fig. 10-1) on a workbench. Hold the housing so that it will be in the same position as it is on the engine.
2. Put the gasket (3) on the housing. Apply clean lubricating oil to the new O-rings. Install the O-rings onto the water inlet and outlet fittings of the element (4). Fit the element into the housing.
3. Install the water inlet connection (11) and new

Digitized by Google

gasket onto the inlet fitting of the element. Do not damage the O-rings. Use your fingers to tighten the capscrews that hold the connection to the housing.

4. Install the gasket (6) into the mounting flange of the element. Make sure the capscrew holes in the gaskets, element and housing are in alignment. Install the cover (7) but do not tighten the capscrews to the correct torque at this time.

5. Install the water outlet connection (9) and new gasket to the cover. Install the capscrews and copper washers. Use your fingers to tighten the capscrews.

Caution: Make sure the O-rings are in the correct position and are not damaged.

6. Tighten the capscrews that fasten the cover (7) to the element (4) and housing (1). Do not tighten the capscrews to the correct torque value at this time.

7. Tighten the capscrews that fasten the water inlet connection (11) to the housing. Tighten the capscrews to 27 to 32 ft.-lbs. [37 to 43 N•m] torque.

8. Tighten the capscrews that fasten the cover to the housing, to 25 ft.-lbs. [34 N•m] torque. Tighten the center capscrews first. Then, tighten the capscrews, moving from one side of the cover to the other side. Work from the center toward each end of the cover.

9. Tighten the capscrews for the water outlet connection (9) to 15 to 20 ft.-lbs. [21 to 27 N•m] torque.

Assembly (Cross-bolt Design Aftercooler)

1. Put the aftercooler housing (10, Fig. 10-2) on a workbench. Hold the housing so that it will be in the same position as it is on the engine.

2. Apply clean lubricating oil to the new O-rings (2). Install the O-rings to the inlet and outlet fittings of the element (1). Install the element into the housing.

Note: The element has a precision fit in the housing. Move the element carefully as you install it into the housing. Check the clearance between the element and housing. Hold the element against one side of the housing to check the clearance. The clearance must not be less than 0.003 inch [0.07 mm] or more than 0.013 inch [0.33 mm].

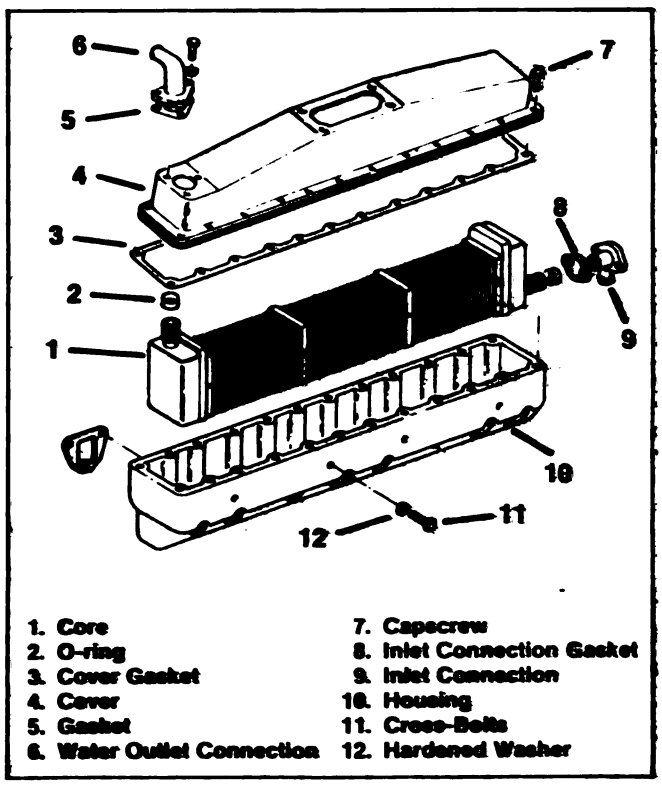

Fig. 10-2 (N10899). Cross-Bolt Design Aftercooler — Exploded View.

Caution: Make sure the O-rings are in the correct position and are not damaged.

3. Align the holes in the housing and element for the cross-bolts. Install the cross-bolts (11) and hardened washers. Tighten the cross-bolts in the center of the housing first, then tighten the cross-bolts at each end. Tighten the cross-bolts to 15 ft.-lbs. [21 N•m] torque. Starting at the center, tighten the cross-bolts again to 25 ft.-lbs. [35 N•m] torque.

4. Install the water inlet connection (9) and new gasket (8) onto the inlet fitting of the element. Do not damage the O-rings. Use your fingers to tighten the capscrews.

5. Install a new gasket (3) and the aftercooler cover (4) to the housing. Make sure the holes in the gasket are aligned with the cover and housing. Use your fingers to tighten the capscrews (7).

Digitized by Google

6. Install the water outlet connection (7) and new gasket (5). Install the copper washers and capscrews. Use your fingers to tighten the capscrews.
7. Tighten the capscrews that fasten the water inlet connection (9) to 27 to 32 ft.-lbs. [37 to 43 N•m] torque.
8. Tighten the capscrews, that fasten the cover to the housing, to 25 ft.-lbs. [34 N•m] torque. Tighten the center capscrews first. Tighten the capscrews, moving from one side of the cover to the other side. Work from the center toward each end of the cover.
9. Tighten the capscrews, that fasten the water outlet connection (6), to 15 to 20 ft.-lbs. [21 to 27 N•m] torque.

Digitized by Google

Digitized by Google

Group 11

The exhaust system group includes the exhaust manifolds.

Exhaust System

Exhaust Manifolds

Dry Type

Inspection

Inspect the exhaust manifold for cracks and distortions.

When ordering replacement parts, order same part as presently used.

Wet Type

Inspection

1. The exhaust manifold is a combination water header and water-cooled exhaust manifold. Clean as outlined in Group 0, Disassembly and Cleaning. Water test at 30 to 80 psi [207 to 552 kPa]
2. Remove the inspection plate from the exhaust manifold. Inspect for cracks and distortions. Replace the manifold if it is damaged.
3. Install the inspection plate and gasket to the exhaust manifold.

Caution: Do not run the engine without coolant in a water-cooled exhaust manifold.

Digitized by Google

Digitized by Google

Group 12

The air equipment group consists of Cummins air compressors, check valve, vacuum pump and piping; it also includes the air-actuated cranking motors, which are sometimes used on Cummins engines.

Air Equipment

Air Compressor

Cummins air compressors are used on all models of Cummins Engines and are covered from a servicing standpoint in Bulletin No. 3379056.

Optional Units, such as Bendix-Westinghouse, Wagner and others are covered by publications available from the manufacturer or authorized service station.

Vacuum Pump

Cummins vacuum pump is an adaptation of the compact Cummins air compressor and is covered in Bulletin No. 3379056.

Air Cranking Motor

Air cranking motor servicing is covered by the manufacturer or authorized service station.

Digitized by Google

Digitized by Google

Group 13

The principal function of the Electrical System on Cummins Diesel Engines is that of cranking or starting and operating electrical accessories as required by the unit being powered.

Electrical Equipment

Wiring Diagram

A complete collection of wiring diagrams, as applied to all Cummins Engines, is contained in Bulletin No. 3379099. The diagrams are all in the single manual because the same diagram may apply to more than one engine model or series. This bulletin may be obtained from a local Cummins Distributor.

Electrical Components

Complete instructions for testing, repairing and adjusting alternators, generators, voltage regulators, cranking motors, batteries, electric cables and connections are available from the local electrical equipment service distributor.

If this service is not available, further specific information can be obtained as follows:

Delco-Remy Equipment

Electrical Equipment Operation and Maintenance Handbook DR-324-1 or -2, -3, -4 and Test Specifications DR-324-S-1 may be purchased from the nearest United Motor Service Station, or the Service Department, Delco-Remy Division, General Motors Corp., Anderson, Indiana.

Leece-Neville Equipment

Operation and adjustment information may be obtained from the nearest Leece-Neville distributor or the Service Department of the Leece-Neville Co., 5109 Hamilton Avenue, Cleveland 14, Ohio.

Digitized by Google

Digitized by Google

Group 14

The engine assembly section includes the assembly of all the units and subassemblies to the cylinder block. This section also includes assembly specifications, adjustments, engine testing and storage.

Engine Assembly and Testing

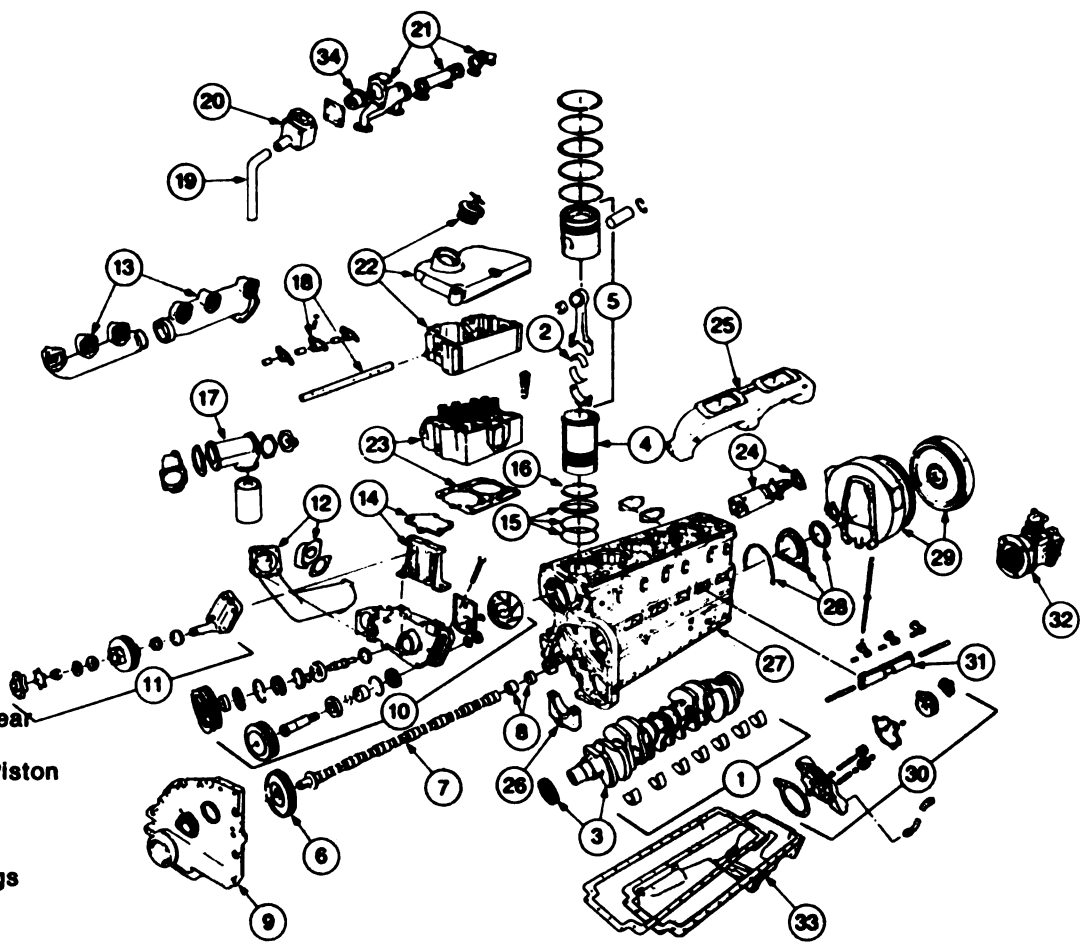

1. Main Bearings
2. Connecting Rod Bearings
3. Crankshaft and Gear
4. Cylinder Liner
5. Connecting Rod/Piston Assembly
6. Camshaft Gear
7. Camshaft
8. Camshaft Bushings
9. Gear Cover
10. Water Pump/Idler Assembly
11. Fan Hub Assembly
12. Water Inlet Connections
13. Exhaust Manifolds
14. Fan Hub Mounting Bracket/Support
15. Cylinder Liner Packing Rings
16. Cylinder Liner Shim
17. Lube Oil Cooler/Filter
18. Rocker Levers/Shaft
19. Water By-Pass Tube
20. Thermostat Housing
21. Water Manifold Assembly
22. Rocker Lever Housing Cover/Cap
23. Cylinder Head and Gasket
24. Cranking Motor/Spacer
25. Intake Manifold
26. Main Bearing Cap
27. Cylinder Block
28. Rear Cover Assembly
29. Flywheel and Housing
30. Lubricating Oil Pump
31. Cam Follower/Push Tubes
32. Fuel Pump
33. Oil Pan and Gasket
34. Thermostat

Fig. 14-0 (N114235). Engine — Exploded View

Digitized by Google

Service Tool List

To assemble and make adjustment to the engine, according to the instructions given in this section, the following service tools or tools of equal quality are required.

Service Tools (Or Equivalent) Required

Service Tool Number	Tool Name
ST-163	Engine Support Stand
3376326	Pulley Assembly Tool
ST-547	Gauge Block
ST-593 or 3375522	Timing Fixture
ST-669	Torque Wrench Adapter
ST-754	Torque Wrench Kit (0-600 ft.-lbs.)
ST-763	Piston Ring Expander
ST-835	O-Ring Assembly Tool
ST-997	Seal and Sleeve Driver
ST-1135	Lube Oil Sampling Filter
ST-1138	Belt Gauge
ST-1172	Seal Mandrel
ST-1173	Seal Mandrel
ST-1182	Valve Spring Spray Nozzle Locator (80 degree Tilt Engine)

Service Tools (Or Equivalent) Required

Service Tool Number	Tool Name
ST-1184	Cylinder Liner Hold-Down Tool
ST-1190	Fuel Consumption Measuring Device
ST-1229	Liner Driver
ST-1232	Drill and Reaming Fixture
ST-1258	Engine Lifting Fixture
ST-1259	Seal Mandrel (Teflon Seal)
ST-1263	Seal Pilot (Teflon Seal) (Rear)
ST-1273	Pressure Gauge (in. hg.)
ST-1274	Belt Gauge
ST-1325	Dial Gauge Attachment
3375013	Block Mounting Plate
3375044	Torque Wrench Kit (0-150 in.-lbs.)
3375045	Torque Wrench Kit (0-175 ft.-lbs.)
3375046	Torque Wrench Kit (0-350 ft.-lbs.)
3375047	Torque Wrench Kit (50-400 ft.-lbs.)
3375049	Oil Filter Wrench (Spin-On)
3375066	Loctite Pipe Sealant
3375096	Inj./Valve Adjust Kit with Jacobs Brake
3375150	Blow-By Checking Tool
3375151	Seal Pilot (Teflon Seal) (Front)
3375159	Air Compressor Wrench
3375162	Piston Ring Compressor
3375193	Engine Rebuild Stand
3375601	Connecting Rod Guide Pins
3375958	Nylon Lifting Sling

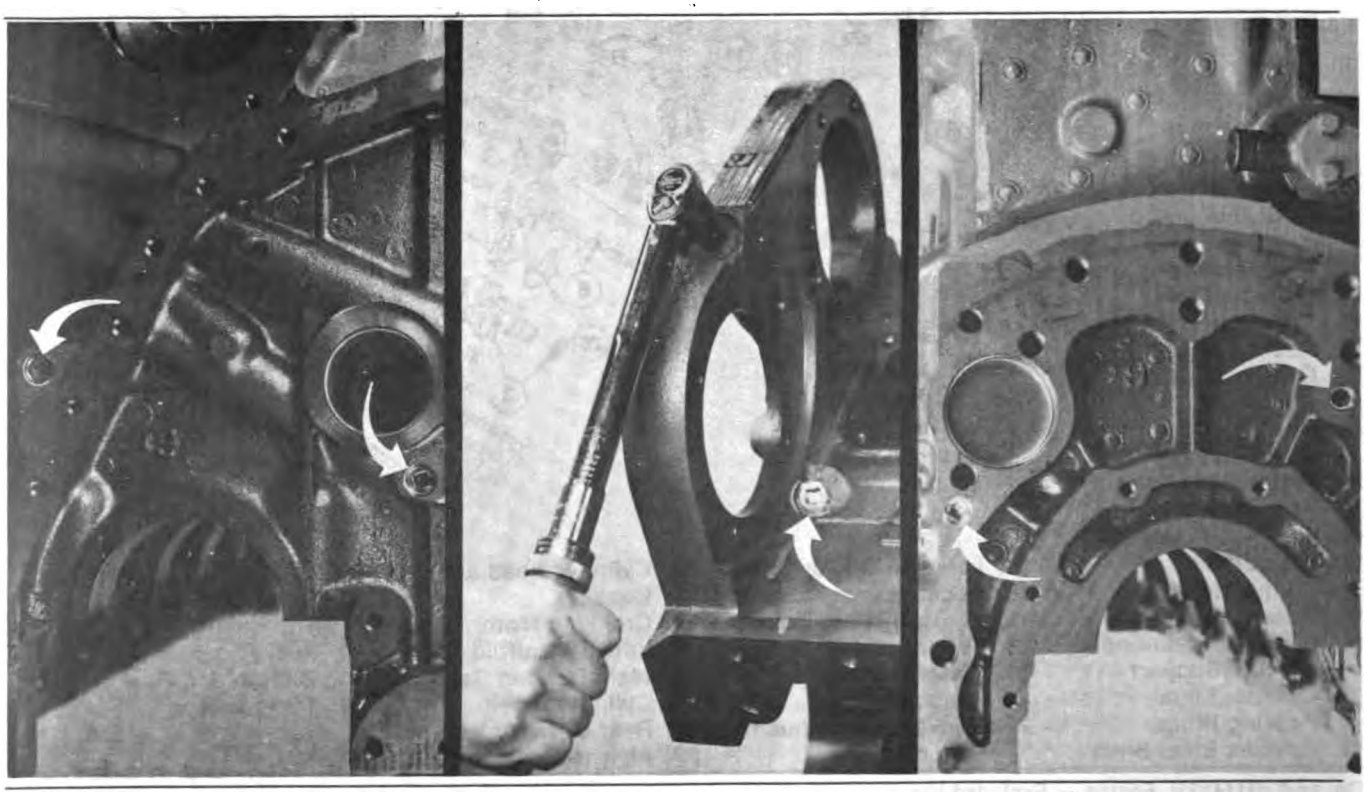

Fig. 14-1 (N114239). Install The Pipe Plugs.

Digitized by Google

Service Tools (Or Equivalent) Required	
Service Tool Number	**Tool Name**
3376021	Actuator Retainer Adjustment Tool
3376028	Variable Timing Fixture
3376029	Bracket and Studs
3376050	Dial Indicator and Sleeve
3801048	Cylinder Liner Sealant
Standard Tools — Obtain Locally	
Dial Indicator (Starret No. 196A)	
Dial Indicator Sleeve (Starret No. 196-L)	
Manometer (Mercury or Water)	
0-1 Micrometer	
Impact Wrench	
Engine and/or Chassis Dynamometer	
Hoist (Power or Chain)	
Straight Edge	
Feeler Gauge	

Engine Assembly

Install The Cylinder Block To The Engine Stand

1. Install the water header adapter plate to the cylinder block. Tighten the capscrews to 6 to 8 ft.-lbs. [8.1 to 11 N•m] torque.
2. Install the Part No. 3375013 Block Mounting Plate to the Part No. 3375193 Engine Rebuild Stand. Make sure that the top of the stand and the plate are aligned correctly.
3. Put the cylinder block in the correct position on the rebuild stand. Install the lockwashers, spacers and capscrews to hold the cylinder block to the rebuild stand. Tighten the capscrews to 75 ft.-lbs. [102 N•m] torque.

Install The Pipe Plugs

Table 1: Pipe Plug Torque Value

Pipe Plug Size	Torque Ft.-Lbs. [N•m] Minimum	Maximum
1/8	10 [13.5]	15 [20]
3/8	20 [27]	25 [34]
1/2	35 [47]	40 [54]
3/4	50 [68]	55 [74.5]
7/8*	60 [81]	70 [95]

*7/8-18 Straight Plug

1. Apply teflon tape or an equivalent to the pipe plugs.

Note: Apply a coat of 30W lubricating oil to the 1/8 pipe plugs to be installed for the oil galley. Do not use teflon tape with these plugs.

2. Install the pipe plugs into the cylinder block, Fig. 14-1. Tighten the pipe plugs to the torque valves listed in Table 1.

Install The Crankshaft And Main Bearings

1. Make sure the main bearing bores are clean. Use a clean cloth to clean the bores. Make sure the cloth does not leave any particles (lint) in the bores. Make sure the capscrew holes are clean and dry.
2. Install the upper main bearing shells, Fig. 14-2.

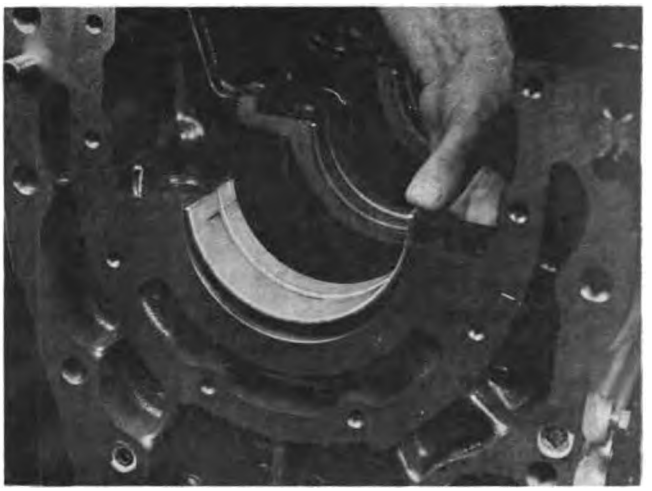

Fig. 14-2 (N114242). Install The Upper Main Bearing Shells.

Note: The upper main bearing shells have a groove and oil hole to permit lubrication of the crankshaft. The upper shells for the No's 2, 4 and 6 are the same. The groove in the shell for No. 7 is not in the center of the shell. Install the No. 7 shell so the wider part of the shell, from the groove, is toward the flywheel end of the cylinder block. Also, each shell has a groove for the dowel ring. Install the shell so the groove will be next to the counterbore in the cylinder block.

3. Apply a heavy coat of clean lubricating oil to the upper shells.
4. Install the main bearing dowel rings, Fig. 14-3.
5. Install the crankshaft. Use a hoist and the Part No. 3375958 Nylon Lifting Sling to lift the

Digitized by Google

crankshaft. Check the marks on the rear counterweight of the crankshaft to find the size of the thrust rings.

6. Install the upper thrust ring. Make sure the grooved side of the thrust ring is against the crankshaft flange, Fig. 14-4.
7. Apply a coat of clean lubricating oil to the bearing surfaces of the crankshaft and to the lower bearing shells. Align the bearing shells with the dowel rings. Then, push on the side of the shell opposite the dowel ring to install the shell, Fig. 14-5.
8. Install the lower thrust ring onto the No. 7 main bearing cap. The grooved side of the thrust ring must be toward the crankshaft flange.

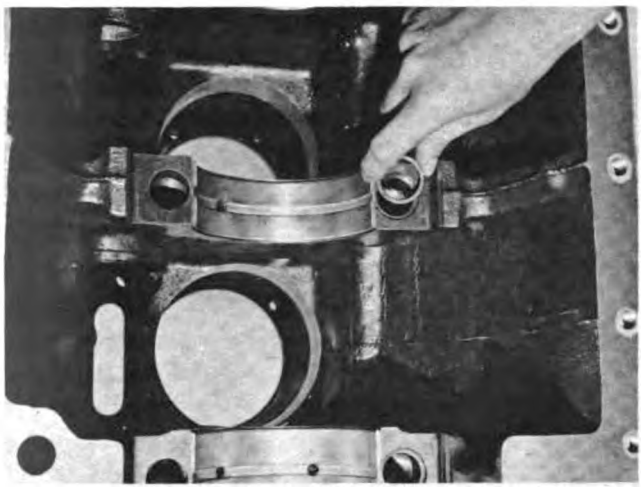

Fig. 14-3 (N11402). Install The Dowel Ring.

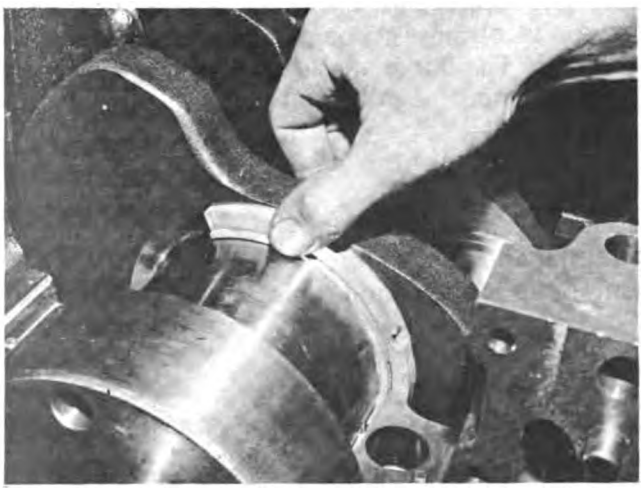

Fig. 14-4 (N11404). Install The Thrust Ring.

Fig. 14-5 (N114244). Install The Lower Bearing Shells.

9. Install the main bearing caps.
   a. Put the caps into the correct location on the cylinder block. Make sure that the number on each cap is the same as the number marked on the cylinder block.
   b. Align the capscrew holes in the caps with the holes in the cylinder block.
   c. Install new lockplates onto the capscrews.
   d. Lubricate the capscrew threads and the lockplates. Use SAE 30W oil to lubricate the capscrews. Use SAE 140W oil to lubricate the lockplates. Drain the excess oil from the capscrews before you install them into the cylinder block.
   e. Install the capscrews and lockplates through the caps and into the cylinder block. Use your hand to tighten the capscrews two to three threads.
   f. Hit the caps with a rubber mallet to push them into the correct position. Make sure that the dowel pins and dowel holes for the No. 7 main bearing are correctly aligned.

Caution: When you hit the cap with the mallet, make sure the bearing shell does not move.

10. Tighten all of the capscrews for the main bearing caps. Use the sequence shown in Fig. 14-6 when you tighten the capscrews. Follow these instructions.
    a. Tighten the 3/4 inch capscrews, Part No. 208346, in steps of 85 ft.-lbs. [115 N•m] torque until the capscrews are tightened

Digitized by Google

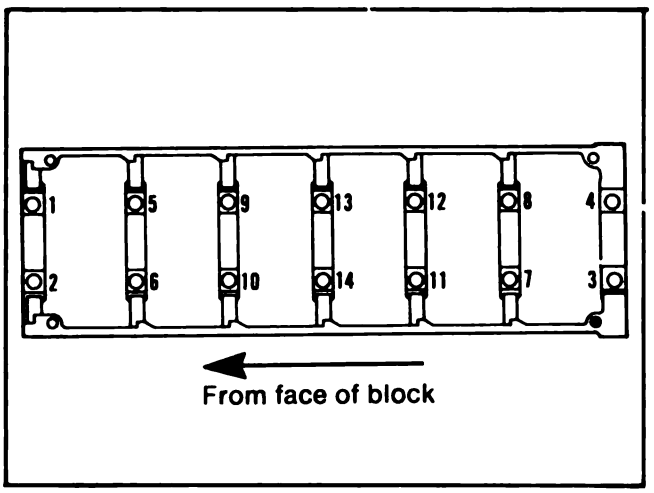

Fig. 14-6. Tightening Sequence For The Main Bearing Capscrews.

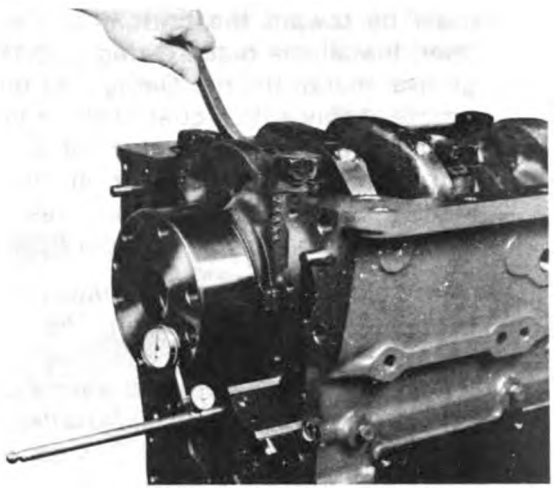

Fig. 14-7 (N114245). Measure The End Clearance Of The Crankshaft.

to 250 to 260 ft.-lbs. [339 to 352.5 N•m] torque. See page 18-5 for exceptions.

b. Tighten the 1 inch capscrews, Part No. 105953, in steps of 100 ft.-lbs. [135.6 N•m] torque until the capscrews are tightened to 300 to 310 ft. lbs. [407 to 420 N•m] torque.

c. Loosen all of the capscrews 3 to 5 threads.

d. Repeat Step a. or b.

11. Check the crankshaft to make sure it rotates freely. Use your hands to rotate the crankshaft.

12. Check the end clearance of the crankshaft. The end clearance must be between 0.007 inch [0.18 mm] and 0.018 inch [0.45 mm] for new crankshafts and thrust rings.

    a. Install a dial indicator gauge to the rear face of the cylinder block. Put the contact tip of the gauge against the end of the crankshaft.

    b. Push the crankshaft toward the front of the cylinder block.

    c. Adjust the indicator to read "0" (zero).

    d. Push the crankshaft toward the rear of the cylinder block, Fig. 14-7. Read the indicator to find the amount of end clearance.

13. If the end clearance is less than 0.007 inch [0.18 mm]:

    a. Loosen the capscrews one turn.

    b. Push the crankshaft toward the front and then toward the rear of the cylinder block.

    c. Follow the instructions in Step 10 to tighten the capscrews.

    d. Check the end clearance.

14. Make sure the end clearance for a used crankshaft is not more than the worn limit of 0.022 inch [0.56 mm]. If the clearance is more than 0.022 inch [0.56 mm], you must repair the crankshaft and use oversize thrust rings as described in Section 1.

15. Bend the tang of the lockplates against the head of the capscrews.

Install the Cylinder Liners

1. Check the bore for the cylinder liner.

    a. The bore must not have any sharp edges that would cut or damage the cylinder liner O-rings.

    b. The counterbore in the cylinder block and the cylinder liner flange must be clean and free from oil. Use a hydrocarbon solvent to clean oil from the parts. You can use a solvent such as Naptha, Methyl Ethyl Ketone (MEK) or Trichlorethane 1,1,1 (Methyl Chloroform).

Caution: Naptha and Methyl Ethyl Ketone (MEK) are flammable materials and must be used with care. Do not use starting fluid as a cleaning agent.

2. Install new O-rings and a crevice seal onto the cylinder liner. Install the crevice seal into the top groove. The chamfer on the crevice seal

Digitized by Google

must be toward the bottom of the cylinder liner. Install the black O-ring into the center groove. Install the red O-ring into the bottom groove. Apply a light coat of clean lubricating oil to the crevice seal and O-rings just before you install the cylinder liner into the cylinder block. Make sure that the oil does not touch the counterbore or the cylinder liner flange.

Caution: Do not lubricate the O-rings until you are ready to install the cylinder liner. The O-rings will increase in size when they are in contact with lubricating oil for an extended period of time. If the cylinder liners are not to be installed within 15 minutes after lubricating the O-rings, use vegetable oil to lubricate the O-rings.

3. Apply a bead of Cummins Sealant, Part No. 3801048, onto the counterbore or the cylinder liner flange as shown in Fig. 14-8. The diameter of the bead must be at least 3/64 inch and not more than 1/16 inch. The liner must be installed within five minutes after the sealant has been applied.

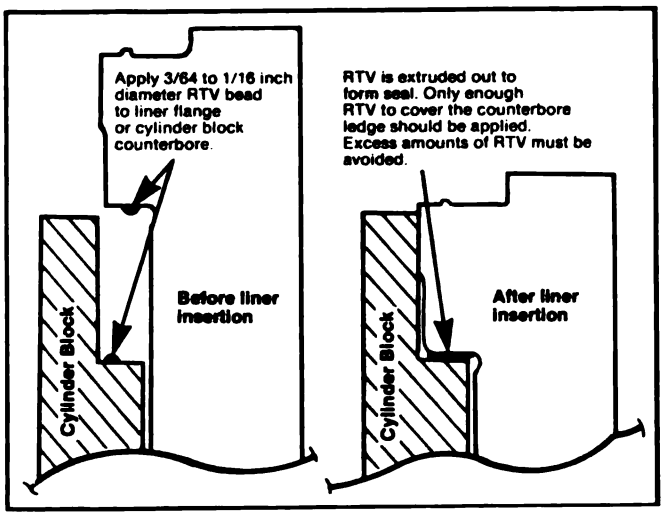

Fig. 14-8. Apply The Sealant To These Locations.

Note: Do not use an excessive amount of sealant. Excessive sealant can cause problems in the cooling system.

4. Put the cylinder liner into the bore in the cylinder block. Make sure the O-rings and crevice seal do not move from the grooves on the cylinder liner. Install the cylinder liner into the bore with a quick push as shown in Fig. 14-9.

Fig. 14-9 (N114106). Use A Quick Push To Put The Liner Into The Bore.

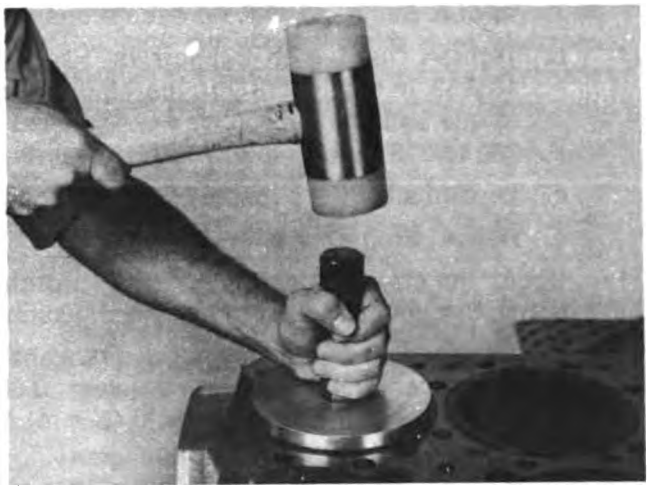

Fig. 14-10 (N114240). Install The Liner.

5. Use the Part No. ST-1229 Liner Driver and a mallet to push the flange of the cylinder liner against the counterbore ledge, Fig. 14-10.
6. Check the protrusion of the cylinder liner.
   a. Install the Part No. ST-1184 Cylinder Liner Hold-down Tool. Make sure the tool is spaced evenly around the cylinder liner so that the tool will apply equal amounts of pressure. Make sure the tool does not damage the bead of the cylinder liner.
   b. Tighten the capscrews to 50 ft. lbs. [68 N•m] torque.
   c. Use the Part No. ST-547 Gauge Block to check the protrusion of the cylinder liner,

Digitized by Google

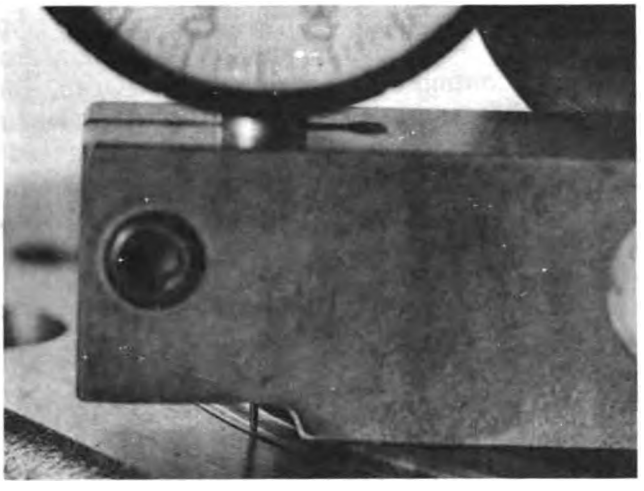

Fig. 14-11 (V514150). Check The Protrusion Of The Liner

Fig. 14-12. Measure The Bore Of The Liner.

Fig. 14-11. The amount of protrusion must be from 0.003 inch [0.08 mm] to 0.006 inch [0.15 mm].

7. Check the inside diameter of the bore in the cylinder liner for an out-of-round condition. Follow the instructions given on pages 1-5 and 1-6. Use a dial bore gauge to measure the bore, Fig. 14-12. Measure the bore at several points within the range of the piston travel. The bore must not be out-of-round more than 0.003 inch [0.08 mm] in the top 1 inch [25.4 mm] of the piston travel area, and not more than 0.002 inch [0.05 mm] in the crevice seal and O-ring area.

Install The Pistons And Connecting Rods

1. Install the rings onto the piston. One side of the ring has a mark or the word "Top." Install the ring so that this side is toward the top of the piston. Install the oil control ring first. Use the Part No. ST-763 Piston Ring Expander to install the rings, Fig. 14-13.

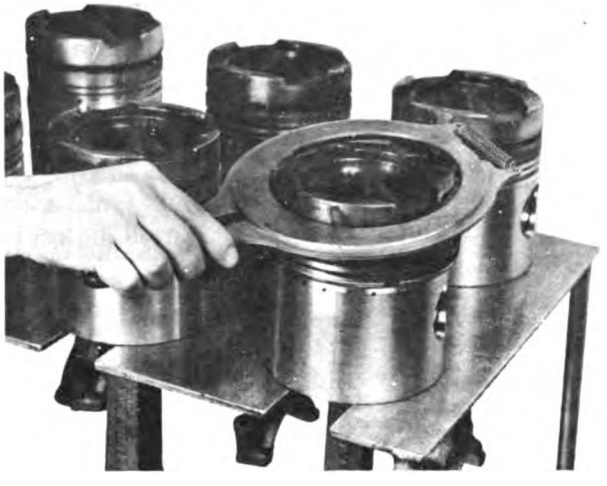

Fig. 14-13 (N114246). Install The Piston Rings.

Caution: Do not damage the rings when you install them onto the piston. Expand the ring just enough to allow it to fit over the piston.

2. Make sure the ring gap of each ring is not in alignment with the piston pin or with any other ring, Fig. 14-14. Install the two-piece oil control ring so that the gap of the expander is 180 degrees from the gap of the ring.
3. Install the upper bearing shell into the con-

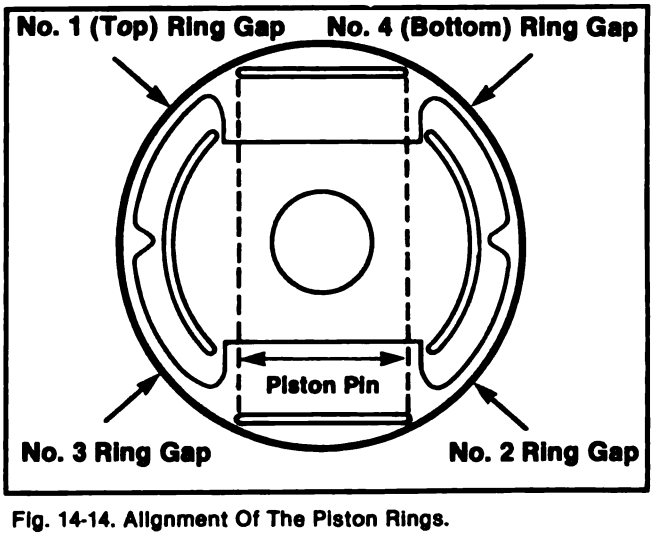

Fig. 14-14. Alignment Of The Piston Rings.

Digitized by Google

necting rod. The tang of the bearing shell must be into the slot in the connecting rod, Fig. 14-15. Make sure the oil hole in the shell is aligned with the oil hole in the connecting rod.

4. Follow the instructions in Step 3 to install the lower bearing shell into the connecting rod cap. The connecting rod caps do not have oil holes.
5. Install the Part No. 3375601 Nylon Guide Screws into the connecting rod, Fig. 14-16.
6. Apply a coat of clean 30W lubricating oil to the bearing shells in the connecting rod and cap.
7. Put the piston and ring assembly into a container of clean 30W lubricating oil in order to apply a coat of oil to the piston and rings. Remove the piston and ring assembly from the container. Use the Part No. 3375162 Ring Compressor to compress the rings. Make sure that the piston rings are correctly located in the grooves in the piston.
8. Install the piston and rod assembly into the cylinder block.
   a. Rotate the crankshaft so that the journal for the connecting rod being installed is at bottom dead center.
   b. Use the ring compressor to hold the piston and rod assembly.
   c. Push the piston through the ring compressor and into the cylinder liner, Fig. 14-17. Do not use a metal device to push against the piston. **Make sure the tang of the connecting rod is toward the camshaft side of the cylinder block.**
   d. Push the piston until the top ring is into the cylinder liner. The piston must move freely from the ring compressor and into the cylinder liner. If the piston does not move freely, remove the piston and check for broken or damaged rings.
   e. Use the nylon guide screws to pull the connecting rode into position against the crankshaft, Fig. 14-18.

Note: Guide the connecting rod onto the crankshaft as you push the piston into the cylinder liner in order to prevent damage to the crankshaft.

Fig. 14-15 (N114246). Install The Upper Bearing Shell Into The Connecting Rod.

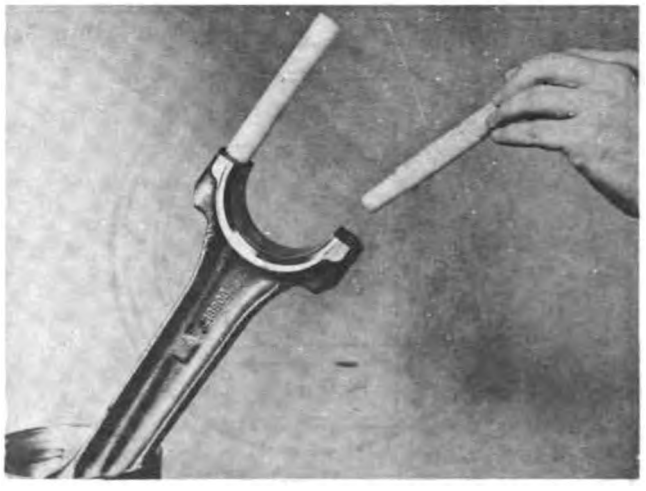

Fig. 14-16 (N114249). Install The Guide Screws Into The Connecting Rod.

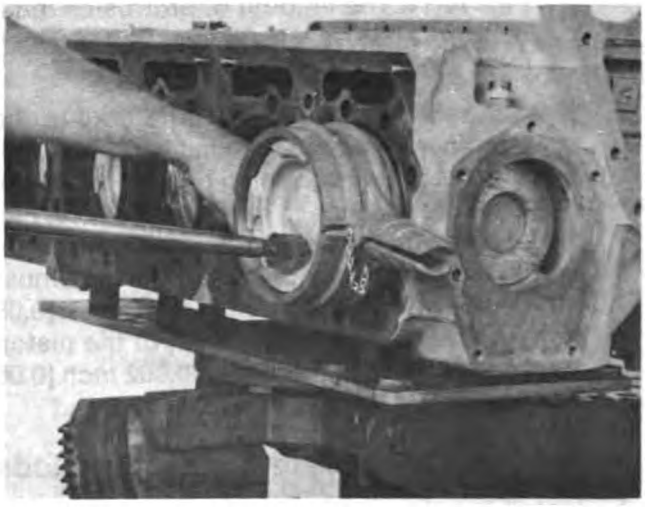

Fig. 14-17. Install The Piston And Connecting Rod Assembly.

Digitized by Google

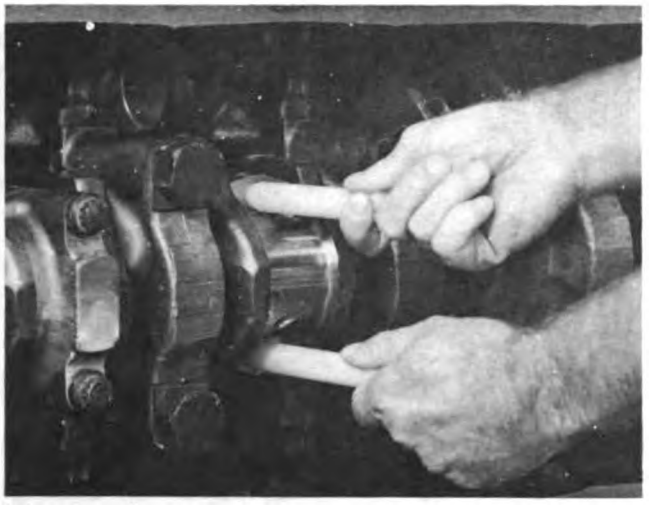

Fig. 14-18. Position The Connecting Rod Against The Crankshaft Journal.

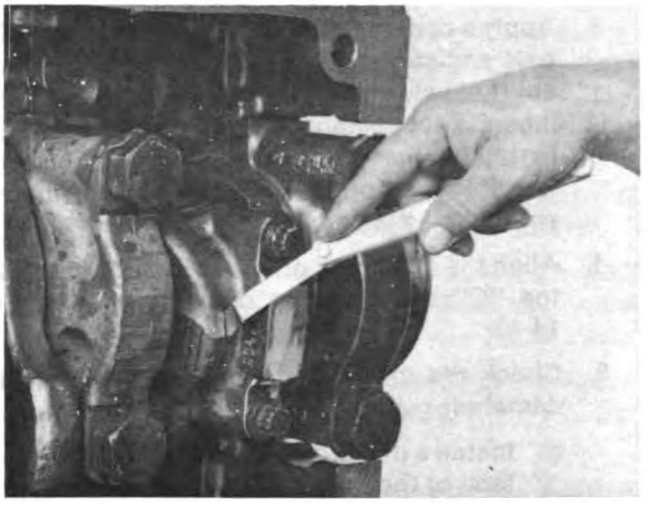

Fig. 14-19. Measure The Side Clearance.

9. Install the connecting rod cap.
   a. Remove the nylon guide screws.
   b. Install the connecting rod cap so that the tang side of the cap is against the tang side of the rod. Make sure that you install the correct cap for the connecting rod.
   c. Apply a coat of clean 30W lubricating oil to the threads of the capscrews or bolts. If the connecting rod has bolts, apply a coat of 140W Lubricant to the washers.
   d. Tighten the capscrews or bolts evenly to push the cap onto the connecting rod. Table 2 gives the correct torque values and the correct sequence to follow.

Table 2: Connecting Rod Torque Specifications

Step No.	Minimum ft.-lbs. [N•m]	Maximum ft.-lbs. [N•m]
1. Tighten To	70 [95]	75 [102]
2. Tighten To	140 [190]	150 [203]
3. Loosen Completely		
4. Tighten To	25 [34]	30 [41]
5. Tighten To	70 [95]	75 [102]
6. Tighten To	140 [190]	150 [203]

10. Check the side-to-side (side clearance) movement of the connecting rod, Fig. 14-19. The connecting rod must move freely. The side clearance must be between 0.0045 inch [0.114 mm] and 0.013 inch [0.33 mm]. If the connecting rod does not move freely, remove the cap. Make sure the bearing shells are the correct size. Check for dirt or damage.

Install the Camshaft

1. Install the cup plug into the camshaft bore at the rear face of the cylinder block. If the bore measures 2.6245 to 2.6255 in. [66.662 to 66.688 mm], use the Part No. 3375153 Cup Plug Driver to install the plug. If the bore measures 2.6885 to 2.6875 in. [68.237 to 68.262 mm], use the Part No. 3375708 Cup Plug Driver.
2. Apply a coat of lubriplate to both sides of the thrust ring. Install the thrust ring onto the camshaft. Make sure that the oil grooves on the thrust ring are toward the camshaft gear, Fig. 14-20.

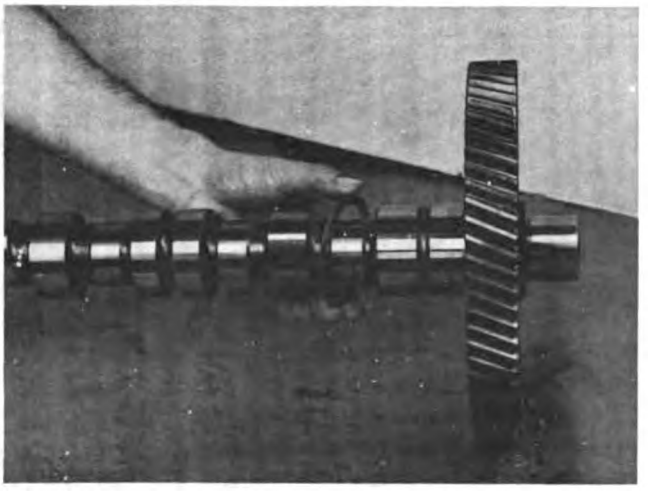

Fig. 14-20 (N114253). Install The Thrust Ring Onto The Camshaft.

Digitized by Google

3. Apply a coat of lubriplate to the camshaft journals and camshaft bushings. Rotate the camshaft slowly as you push it through the bushings. Do not damage the camshaft or bushings. Install the Part No. 3375268 Camshaft Installation Pilots onto the 2½ inch camshaft before you install the camshaft, Fig. 14-21.
4. Align the "O" mark on the camshaft gear with the "O" mark on the crankshaft gear, Fig. 14-22.
5. Check the amount of backlash between the camshaft gear and crankshaft gear.
   a. Install a dial indicator gauge onto the front face of the cylinder block. Position the tip of the gauge against a tooth of the camshaft gear, Fig. 14-23.
   b. Rotate the camshaft gear as far as it will freely move. Make sure that the crankshaft gear does not move. Turn the dial of the gauge to zero.
   c. Rotate the camshaft gear in the opposite direction. The reading on the gauge shows the amount of backlash between the gears.
   d. The normal amount of backlash between a new camshaft gear and a new crankshaft gear is 0.004 to 0.016 inch [0.10 to 0.40 mm]. The backlash must measure at least 0.002 inch [0.05 mm].
   e. The backlash between gears that have been used must measure no more than 0.020 inch [9.51 mm].

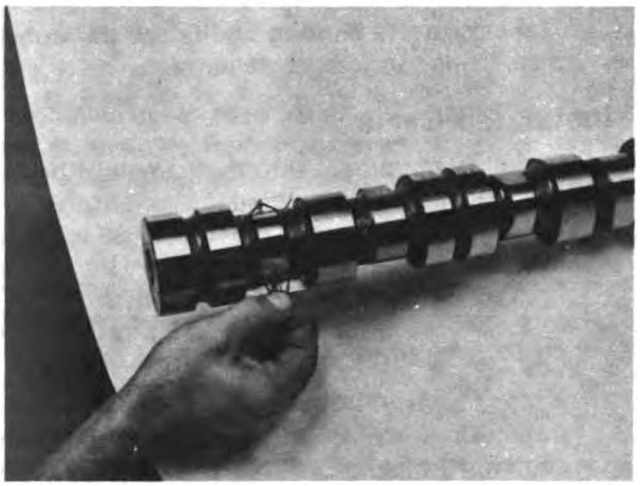

Fig. 14-21 (N114254). Install The Pilots Onto The 2½ Inch Camshaft.

Fig. 14-22. Align The Timing Marks On The Camshaft Gear And Crankshaft Gear.

Fig. 14-23. Check The Gear Backlash.

Install The Cylinder Heads

1. Make sure that the surfaces for the gaskets are clean.
2. Install the new gasket onto the dowel pins in the cylinder block. Make sure the side of the gasket with the word "Top" is up, Fig. 14-24.

Note: Two types of head gaskets can be used. One type has red silicone sealing beads. This gasket does not require any additional parts. The other type does not have the red silicone sealing beads and you must install water grommets into the gasket.

Digitized by Google

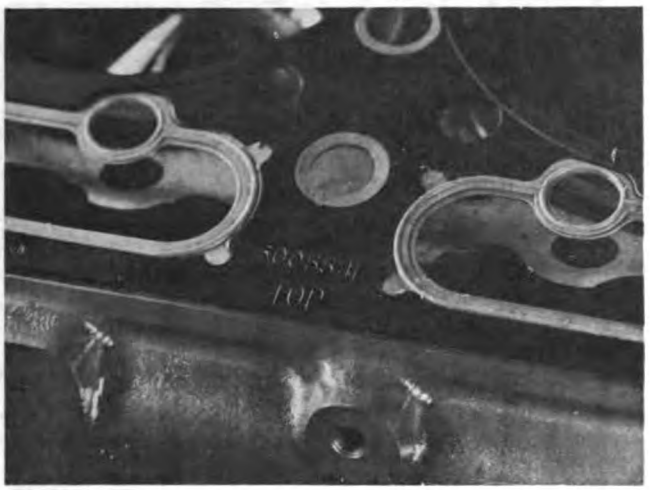

Fig. 14-24 (N114257). Install The Cylinder Head Gasket.

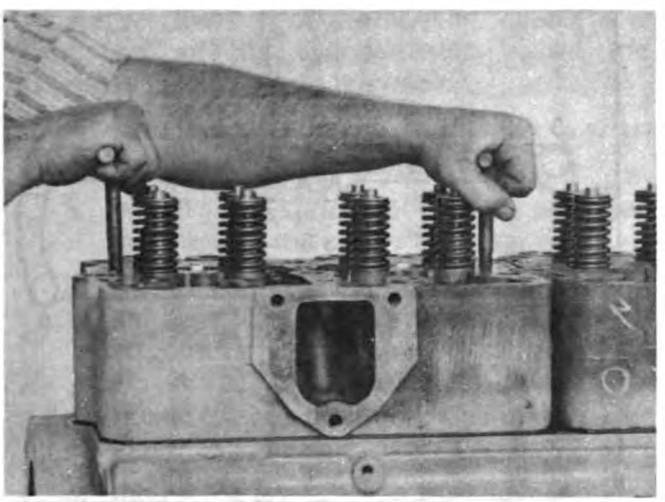

Fig. 14-25. Install The Cylinder Heads.

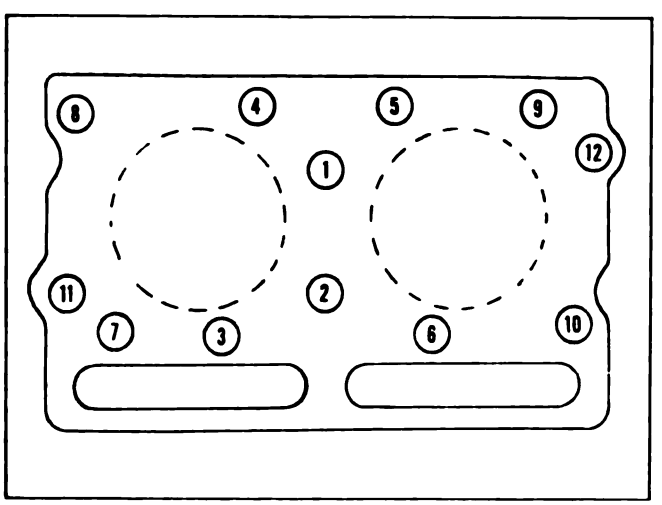

Fig. 14-26 (N11427). The Tightening Sequence For The Cylinder Head Capscrews.

3. Install two guide studs into the cylinder block. Use the guide pins to help you to install the cylinder head in the correct position on the cylinder block. Install T-handles into the cylinder head. Put the cylinder head over the guide pins and into position on the cylinder block. Use the T-handles to lift the cylinder head, Fig. 14-25.
4. Lubricate the cylinder head capscrews with preservative oil. Drain the excess preservative oil from the capscrews before you install them.

Note: The cylinder head capscrews for the turbocharged engine must have the letters "NT" on the head of the capscrew.

5. Install the washers and capscrews. Tighten the capscrews in the sequence shown in Fig. 14-26. Tighten the capscrews to the torque values given in Table 3.

Table 3: Cylinder Head Capscrew Torque Value

Step No.	Minimum ft.-lbs. [N•m]	Maximum ft.-lbs. [N•m]
1. Tighten To	20 [27]	25 [34]
2. Tighten To	80 [108]	100 [136]
3. Tighten To	265 [359]	305 [413.5]

Install The Fuel Crossover

1. Install new O-rings into the counterbores in the cylinder heads.
2. Install the fuel crossover connections over the O-rings and onto the cylinder loads.

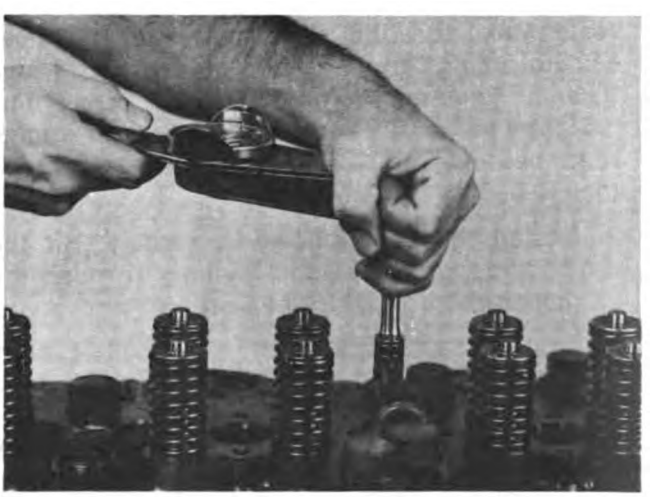

Fig. 14-27 (N114258). Tighten The Screws For The Fuel Crossover.

Digitized by Google

3. Install the screws. Tighten the screws to 34 to 38 in.-lbs. [3.8 to 4.3 N•m] torque, Fig. 14-27.

Install The Fuel Fittings And Tubing

1. Apply teflon tape or an equivalent to the fittings.
2. Install the fuel inlet and drain fittings into the cylinder heads. Install the fittings into the same locations as when they were removed.
3. Tighten the 1/8 inch angle fittings to 150 in.-lbs. [16.9 N•m] torque. If the fitting is not in alignment with the fuel tubing, turn the fitting in the tightening direction to align the fitting. Do not turn the fitting in the loosening direction.
4. Install the fuel tubing into the fitting. Tighten the tubing nuts to the torque value given in Table 4.

Table 4: Tubing Nut Torque Value

Nut Size	Minimum in.-lbs. [N•m]	Maximum in.-lbs. [N•m]
1/4 inch	120 [13.5]	145 [16.4]
5/16 inch	180 [20.3]	200 [22.6]
1/2 inch	275 [31]	335 [37.8]

Install The Cam Followers And Push Rods

1. Install the cam follower gaskets to the cylinder block. Use new gaskets with the same thickness as the gaskets that were removed.
2. The Big Cam engine must have at least one "print-o-seal" gasket with a silicone sealing bead for each cam follower housing. Install the "print-o-seal" gasket so that it is against the cylinder block and the sealing bead is toward the cam follower housing, Fig. 14-28.

Note: Make sure that the total gasket thickness for the Small Cam engine is at least 0.014 inch [0.36 mm] and not more than 0.125 inch [3.2 mm]. The total gasket thickness for the Big Cam engine must be between 0.014 inch [0.36 mm] and 0.080 inch [2.0 mm].

3. Install the cam follower assembly. Hit the housing with a plastic hammer to push the housing onto the dowel pins.
4. Install the capscrews and lockwashers. Tighten the capscrews to 15 ft.-lbs. [20 N•m] torque. Then, tighten the capscrews to 30 to 35 ft.-lbs. [41 to 47 N•m] torque. Follow the sequence in Fig. 14-29 to tighten the capscrews.

   Lubricate the ball end of the push rods with 140W lubricating oil. Install the ball end of the push rod into the socket of the cam follower. The outside diameter of the injector push rod is larger than the outside diameter of the valve push rod. The push rods for the intake and exhaust valves are the same. Install the injector push rod into the middle cam follower.

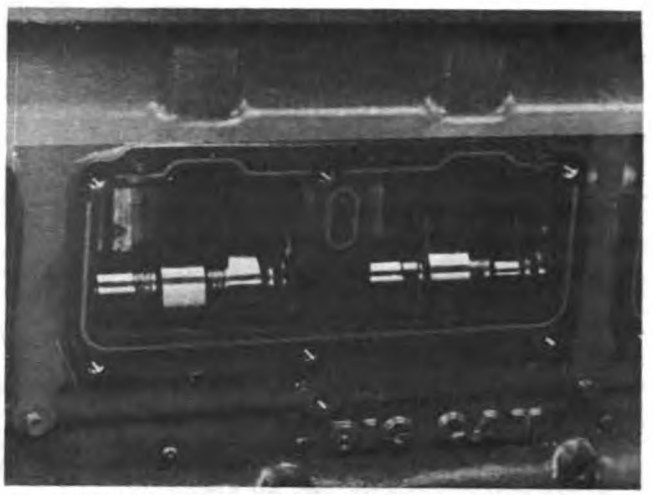

Fig. 14-28 (N114259). Install The "Print-O-Seal" Cam Follower Gasket.

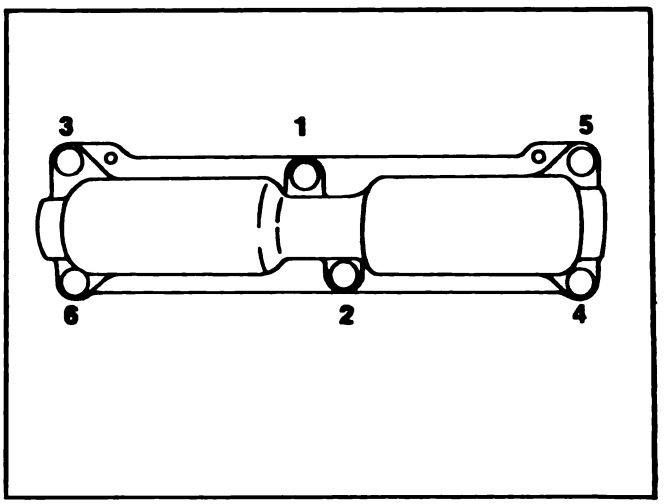

Fig. 14-29 (N114236). Tightening Sequence For The Cam Follower Housing.

Note: The outside diameter of the injector push rod will be either 0.750 inch [19.05 mm] or 0.656 inch [16.67 mm]. The outside diameter of the valve push rod is 0.625 inch [15.88 mm]. (0.656 in. [16.66 mm] for the Big Cam NTC-400 only) The valve push rod is 0.007 inch [1.78 mm] longer than the injector push rod. See Table 5 to find the difference in length between the push rods for the Big Cam engine and the push rods for the Small Cam engine.

Digitized by Google

Table 5: Push Rod Length — Inch [mm]

	2 Inch Camshaft		2½ Inch Camshaft	
Push Rod	Minimum	Maximum	Minimum	Maximum
Injector	18.290 [464.56]	18.320 [465.32]	17.775 [451.48]	17.805 [452.24]
Valve	18.360 [466.34]	18.390 [467.11]	17.880 [464.15]	17.910 [454.91]

To Install the MVT Cam Follower

The three housings of the MVT cam followers must be installed to the engine as an assembly.

1. Assemble the front and rear housing assemblies to the center housing assembly.

Note: When the instructions refer to the front housing or the front of the housing, that is the housing or the end of the housing nearest the front face of the cylinder block when the assembly is installed to the engine.

   a. Install the spline coupling onto the shaft in the front of the center housing.

   b. Install a new O-ring (rectangular seal) into each end of the center housing.

   c. Align the splines on the shafts in the front and rear housing with the splines on the shaft in the center housing. Use the Part No. 3376027 Cam Follower Shaft Positioner to turn the shaft so that you can align the splines.

   d. Install the shaft of the front housing into the spline coupling. Align the dowel in the center housing with the slot in the front housing. Push the shaft into the coupling until the housing is against the rectangular seal.

   e. Install the shaft of the rear housing into the actuator gear in the center housing. Align the dowel in the center housing with the slot in the rear housing. Push the shaft into the gear until the housing is against the rectangular seal.

2. Install the Part Nos. 3376028 Variable Timing Fixture and 3379029 Bracket to the Cam follower Assembly. The 3376028 holds the housings in alignment. The 3376029 holds the cam follower levers in an upward position to prevent damage to the camshaft and rollers when the assembly is installed to the engine.

3. Make sure that the rectangular seals are in the correct position.

4. Install the guide pins into three of the capscrew holes in the cylinder block. Install the guide pins so that they will align with the top right hand capscrew hole of each housing.

5. Install the cam follower housing gasket onto the dowels and guide pins.

Note: The MVT has only one gasket and only one gasket thickness.

6. Apply a coat of clean 30W lubricating oil to the lobes of the camshaft.

7. Install the cam follower assembly onto the guide pins and dowel pins, Fig. 14-30.

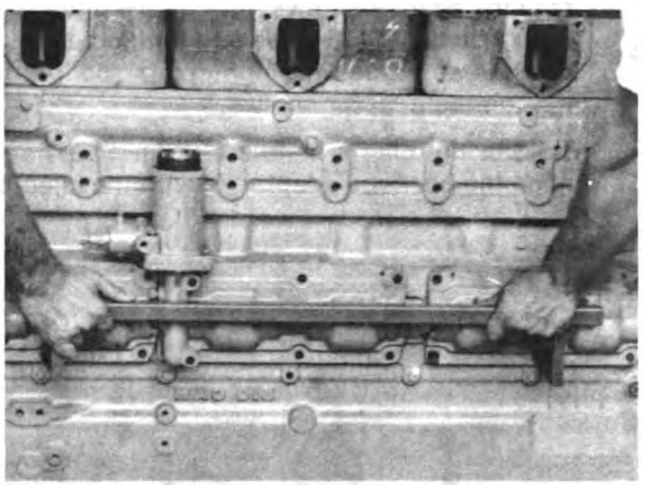

Fig. 14-30. Install The Cam Follower Assembly.

Caution: The cam follower assembly is heavy. Use another person to help lift the assembly.

8. Remove the 3376028 and the 3376029 from the assembly.

9. Hit the housings with a plastic hammer to push them onto the dowel pins.

10. Remove the guide pins.

11. Install the capscrews and lockwashers. Tighten the capscrews for the center housing first. Tighten the capscrews in the same sequence used for the small cam and Big Cam engines. Tighten the capscrews to 15 ft.-lbs. [20 N•m] torque. Then, tighten the capscrews to 30 to 35 ft.-lbs. [41 to 47 N•m] torque.

Digitized by Google

Injection Timing

For Small Cam and Big Cam Engines

Use the cylinders No. 1, 3 and 5 to check the injection timing of the Small Cam and Big Cam Engines. Use the Part No. 3375522 Injection Timing Tool to check the timing. The timing tool is ued to check the timing of all Cummins engines and can be used with the rocker levers installed on the engine.

Follow these instructions to check the timing.

1. Install the support bracket for the push rod adapter (5, Fig. 14-31) into the slot nearest the clamp handle (4).
2. Install the piston plunger rod (1, Fig. 14-31) into the injector sleeve of the No. 1 cylinder. To fasten the timing tool to the cylinder head, install the adapter screws through the mounting foot (2) and into the holes for the injector hold-down plate. Use the tightening rod (3) to tighten the adapter screws.
3. Loosen the clamp handle (4, Fig. 14-31) and align the push rod adapter (6) with the injector push rod. Tighten the clamp handle. Loosen the support bracket (5). Slide the bracket down until the adapter (6) engages the push rod. Then, compress the tension spring for the adapter approximately 0.50 inch [12.7 mm]. Tighten the support bracket. Make sure the support bracket is aligned with the vertical line on the clamp handle bracket.
4. Rotate the crankshaft in the direction of engine rotation to the Top Dead Center (TDC) position of the compression stroke for the No. 1 cylinder, (1) Fig. 14-32. Loosen the thumbscrew for the piston travel gauge. Move the gauge so that the stem of the gauge is in the center of the piston plunger rod. Lower the gauge against the piston plunger rod until the stem is fully compressed, then raise the gauge approximately 0.025 inch. Tighten the thumbscrew to hold the gauge in position. Rotate the crankshaft 2 or 3 degrees clockwise and counterclockwise to make sure the piston is at TDC. Loosen the setscrew for the gauge dial and turn the dial so that the indicator is at zero. Tighten the setscrew.

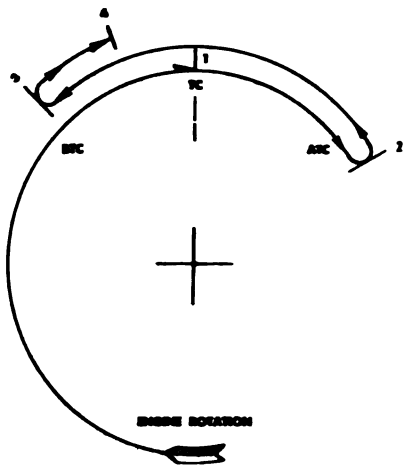

Fig. 14-32 (V31435). Injection Timing Procedure Diagram.

Note: Each gauge for the Timing Tool has a total travel of 1.0 inch. One revolution of the indicator needle equals 0.100 inch travel of the indicator stem. When the stem of the gauge is compressed, the indicator turns clockwise and the revolution counter turns counterclockwise. Be sure to note the reading on the revolution colunter at TDC. This will help you find 0.2032 inch Before Top Dead Center (BTDC).

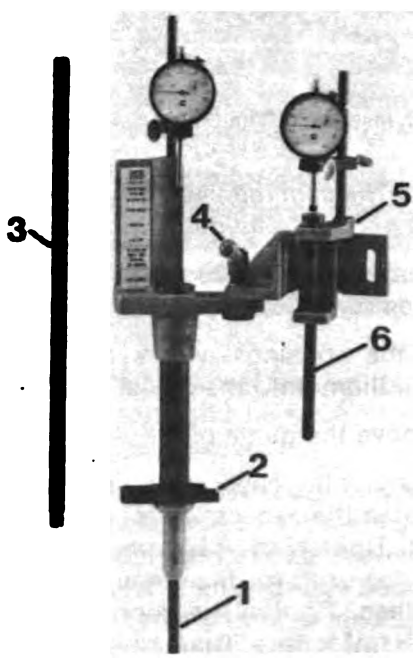

Fig. 14-31. The Part No. 3375522 Injection Timing Tool.

Digitized by Google

5. Rotate the crankshaft in the direction of engine rotation to 90 degrees After Top Dead Center (ATDC), (2) Fig. 14-32. Loosen the thumbscrew for the push rod travel gauge. Move the gauge so that the stem of the gauge is in the center of the push rod adapter. Lower the gauge against the adapter until the stem is fully compressed. Then raise the gauge approximately 0.025 inch. Tighten the thumbscrew to hold the gauge in position. Loosen the setscrew for the gauge dial. Turn the dial so that the indicator is at zero. Tighten the setscrew.

6. Rotate the crankshaft in the opposite direction of engine rotation, until you reach TDC.

   a. Always rotate the crankshaft slowly.

   b. Watch the piston travel indicator as you rotate the crankshaft.

   c. Continue to rotate the crankshaft past TDC until the indicator shows 0.225 inch (two and one-fourth revolutions of the indicator needle past TDC, (3) Fig. 14-32). This step is necessary to take up the gear lash in the engine.

7. Rotate the crankshaft in the direction of engine rotation until the piston travel gauge is at 0.2032 inch BTDC (4) Fig. 14-32.

Note: The engine must be on the compression stroke. When the crankshaft is rotated to TDC on the compression stroke, the indicators on both gauges will move in the same direction. If they do not, rotate the crankshaft one complete revolution and repeat Step 5.

8. Read the push rod travel gauge. The push rod travel must be within the limits given in Table 6.

Note: Never change the cam follower gaskets to correct the injection timing until you check the following:

   a. That the Timing Tool is correctly installed.

   b. That the gauges are correctly adjusted.

   c. That the crankshaft has been rotated in the correct direction.

   d. That the capscrews for the cam follower housings are tightened to 30 to 35 ft.-lbs. [41 to 47 N•m] torque.

Table 6: Injection Timing Codes and Push Rod Travel

Timing (1) Code	Push Rod Travel (2) (Inches) Fast	Slow	Advanced Timing MVT Only
A	−0.0395	−0.0435	
C	−0.0315	−0.0355	
D	−0.034	−0.038	
E	−0.028	−0.030	
Z	−0.024	−0.028	
AA	−0.030	−0.032	
AC	−0.027	−0.029	
AF	−0.044	−0.046	
AH	−0.034	−0.036	
AK	−0.040	−0.042	
AN	−0.045	−0.047	
AQ	−0.041	−0.043	
AS	−0.035	−0.037	
AU	−0.048	−0.050	
AV	−0.049	−0.051	
AW	−0.059	−0.061	
AX	−0.054	−0.056	
AY	−0.039	−0.041	
AZ	−0.058	−0.060	
BA	−0.027	−0.029	
BC	−0.023	−0.025	
BH	−0.051	−0.053	
BM	−0.052	−0.054	
BS	−0.071	−0.073	
BT	−0.080	−0.082	
BU	−0.064	−0.066	
BV	−0.061	−0.063	
BW	−0.066	−0.068	
BY	−0.069	−0.071	
CB (3)	−0.104	−0.106	−0.065 ± 0.005
CC (3)	−0.114	−0.116	−0.062 ± 0.005
CD	−0.073	−0.075	
CE	−0.025	−0.027	
CF	−0.037	−0.039	
CH	−0.051	−0.053	
CM (3)	−0.099	−0.101	−0.060 ± 0.005
CN (3)	−0.104	−0.106	−0.065 ± 0.005
CO	−0.0625	−0.0645	
CP (3)	−0.119	−0.121	−0.060 ± 0.005
CR (3)	−0.109	−0.111	−0.067 ± 0.005

(1) Check the engine dataplate to find the Timing Code.
(2) Measure the push rod travel when the piston is at 0.2032 inch Before Top Dead Center.
(3) Timing Code for Mechanical Variable Timing (MVT).

9. Follow Steps 4 through 8 to check the injection Timing of cylinders No. 3 and 5.

10. If the reading on the push rod travel gauge is not within the limits given in Table 6, increase or decrease the thickness of the cam follower gaskets to correct the injection timing.

   a. Increase the thickness of the gaskets to *Advance* the injection timing of *Right Hand* rotation engines.

Digitized by Google

b. Decrease the thickness of the gaskets to *Retard* the injection timing of *Right Hand* rotation engines.

c. Increase the thickness of the gaskets to *Retard* the injection timing of *Left Hand* rotation engines.

d. Decrease the thickness of the gaskets to *Advance* the injection timing of *Left Hand* rotation engines.

11. See Table 7 to find the thickness of the cam follower gaskets and the amount of change in the push rod travel for each gasket.

Note: Do not increase the total gasket thickness to more than 0.125 inch [3.2 mm] for the Small Cam engine or more than 0.080 inch [2.0 mm] for the Big Cam engine. The Small Cam and Big Cam engines must have at least 0.014 inch [0.3 mm] total gasket thickness.

12. If you cannot correct the injection timing by increasing or decreasing the thickness of the gaskets, install an offset camshaft key. See Table 8 to find the correct key. Follow the instructions in Group 1 to remove and install a camshaft key.

The MVT Injection Timing

1. The MVT system must be completely retarded when you check the timing.

   a. Remove the actuator cap and check the actuator plunger to make sure it is all of the way down in the housing.

   b. If the plunger is not in the down position, rotate the crankshaft two complete revolutions. This will cause the plunger to move down in the housing.

2. Install the Part No. 3375522 Injection Timing Tool into the injector sleeve of the No. 3 cylinder. Follow the instructions given for the Small Cam and Big Cam engines to install the Timing Tool.

3. Check the retard injection timing. Follow the instructions given for the Small Cam and Big Cam engines to check the timing.

4. The push rod travel must be within the limits given in Table 6.

5. Follow these instructions to adjust the injection timing:

   a. Loosen the spring retainer locknut.

   b. Rotate the spring retainer to adjust the injection timing. Use the Part No. 3376021 Retainer Adjusting Tool to rotate the spring retainer, Fig. 14-33. Rotate the retainer counterclockwise to advance the timing. Rotate the retainer clockwise to

Table 7: Cam Follower Gasket Specifications

Gasket Part No.	Thickness Inch [mm]	Change in Push Rod Travel Inch [mm]	Application
3020001	0.006 to 0.008 [0.15 to 0.20]	0.0015 to 0.002 [0.04 to 0.05]	Big Cam
3020002	0.014 to 0.020 [0.36 to 0.51]	0.0035 to 0.005 [0.09 to 0.13]	Big Cam
3020003	0.020 to 0.024 [0.51 to 0.61]	0.005 to 0.006 [0.13 to 0.15]	Big Cam
3020004	0.027 to 0.033 [0.69 to 0.84]	0.007 to 0.008 [0.18 to 0.20]	Big Cam
9266-A*	0.006 to 0.008 [0.15 to 0.20]	0.0015 to 0.002 [0.04 to 0.05]	Small Cam
9266	0.014 to 0.020 [0.36 to 0.51]	0.035 to 0.005 [0.09 to 0.13]	Small Cam
3011272	0.020 to 0.024 [0.51 to 0.61]	0.005 to 0.006 [0.13 to 0.15]	Small Cam
120619	0.027 to 0.033 [0.69 to 0.84]	0.007 to 0.008 [0.18 to 0.20]	Small Cam
3011273	0.037 to 0.041 [0.94 to 1.04]	0.009 to 0.010 [0.23 to 0.25]	Small Cam

*Must not be used alone.

Table 8: Timing Key Information

(With Arrow Toward Camshaft Plug)				
¾ Inch Key Part No.	1 Inch Key Part No.	Offset Inch [mm]	Timing Change	Equivalent Gasket Stack Thickness Change Inch [mm]
3021601	69550	None	None	None
3021595	200722	0.0060 [0.15]	Retard	0.012 [0.30]
3021593	200712	0.0075 [0.19]	Retard	0.015 [0.38]
3021592	200707	0.0115 [0.29]	Retard	0.023 [0.58]
3021594	200713	0.0185 [0.47]	Retard	0.037 [0.94]
3021596	200723	0.0255 [0.65]	Retard	0.051 [1.30]
3021598	208746	0.0310 [0.79]	Retard	0.062 [1.57]
3021597	202600	0.0390 [0.99]	Retard	0.078 [1.98]
3021600	3012307	0.0510 [1.30]	Retard	0.102 [2.59]
3021599	3012328	0.0115 [0.29]	Advance	0.023 [0.58]
3022352*	—	0.0185 [0.47]	Advance	—
3022353*	—	0.0310 [0.79]	Advance	—

*For Mechanical Variable Timing (MVT) Engines)

Digitized by Google

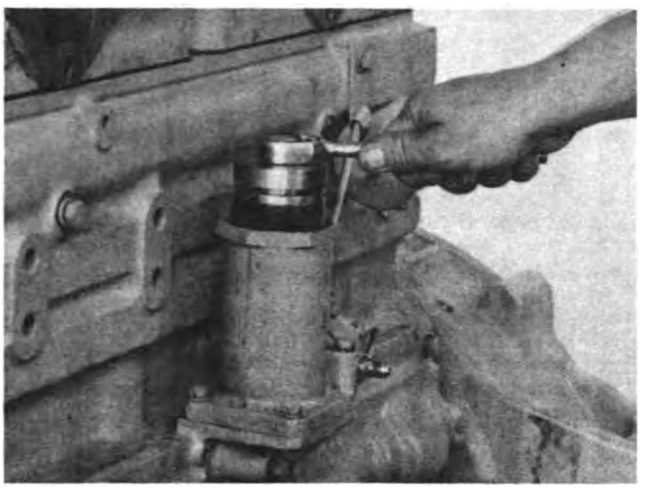

Fig. 14-33. Use The 3376021 Adjusting Tool To Rotate The Spring Retainer.

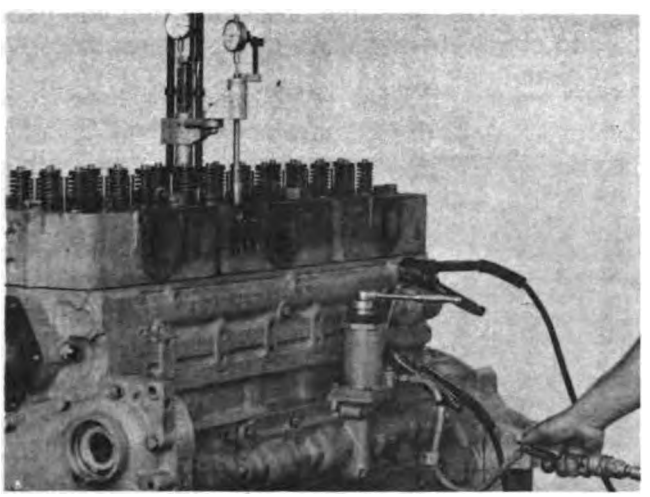

Fig. 14-34. Apply Air Pressure To The Actuator Housing.

retard the timing. One complete turn of the retainer will change the push rod travel approximately 0.004 inch [0.10 mm].

c. Hold the spring retainer in position and tighten the locknut to 30 to 35 ft.-lbs. [40 to 47 N•m] torque.

6. Check the advance timing of the No. 3 cylinder.

   a. Install an air supply line into the air inlet of the actuator housing. The air supply must have more than 80 psi [551 Kpa] air pressure.

   b. Apply 12 volts of DC current to the MVT solenoid. You can use a battery charger to supply the electric current.

   c. Apply air pressure to move the actuator plunger to the advance position, Fig. 14-34. The actuator plunger must move freely to the advance position.

   d. Check the advance timing. See Table 6 to find the correct specification for the advance timing.

   e. Remove the air supply line and the electric current after you check the advance timing.

7. Install the 3375522 Timing Tool into the injector sleeve of the next cylinder to be checked. Follow the engine firing order. See Table 9 to find the engine firing order.

Table 9: Engine Firing Order
Cylinder Number: 1 - 5 - 3 - 6 - 2 - 4

8. Check the retard injection timing. Follow the instructions given to check the timing for the No. 3 cylinder.

9. Install the actuator cap. Tighten the cap to 25 to 30 ft.-lbs. [34 to 40 N•m] torque.

Note: The difference in timing from one cylinder to another can be ±0.004 inch. The MVT engine uses a one-piece cam follower gasket. You cannot change the thickness of the gasket to adjust the timing for each cylinder.

Install the Accessory Drive Assembly

1. Rotate the crankshaft in the direction of engine rotation until the No. 1 cylinder is at Top Dead Center of the compression stroke.

2. Rotate the crankshaft in the direction of engine rotation to 90 degrees after Top Dead Center.

3. Install the accessory drive assembly. Make sure that the timing marks on the accessory drive gear align with the timing marks on the camshaft, Fig. 14-35.

Note: The timing marks on the accessory drive gear and camshaft gear must be aligned so that the valve and injector adjustment marks on the accessory drive pulley will be correctly aligned.

4. Tighten the capscrews to 40 to 45 ft.-lbs. [54 to 61 n•m] torque.

Digitized by Google

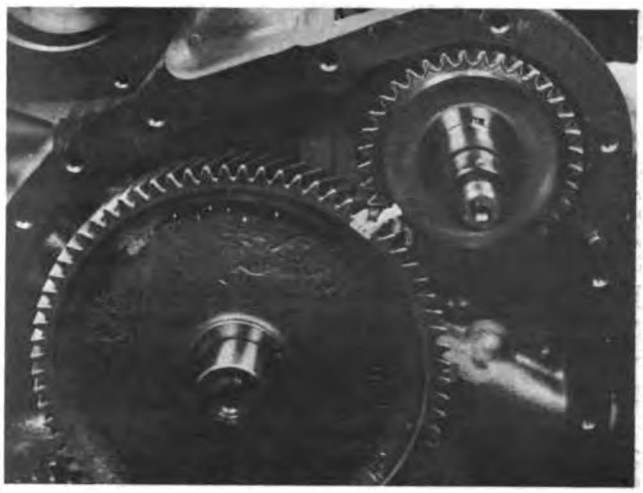

Fig. 14-35 (N114262). Align The Timing Marks.

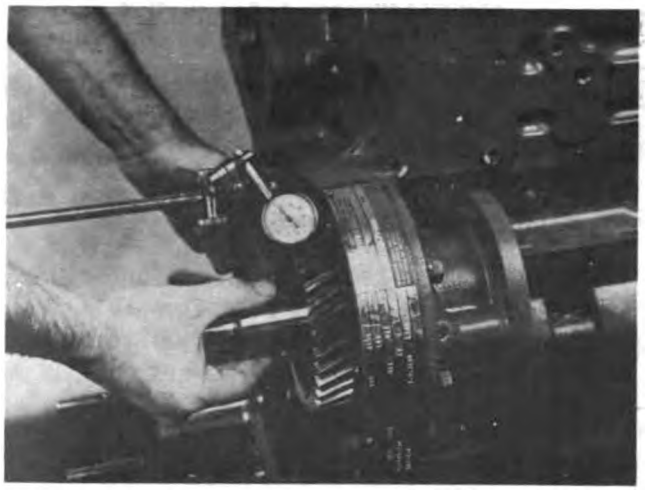

Fig. 14-36 (N114263). Check The Gear Backlash.

5. Check the accessory drive gear to camshaft gear backlash.
   a. Install a dial indicator gauge onto the cylinder block. Position the gauge so that the stem is against a tooth on the accessory drive gear, Fig. 14-36.
   b. Rotate the accessory drive gear as far as it will freely move. Turn the dial of the gauge to zero.
   c. Rotate the accessory drive gear in the opposite direction. The reading and the gauge shows the amount of backlash between the gears.
   d. The normal amount of backlash between a new accessory drive gear and a new camshaft gear is 0.004 to 0.016 inch [0.10 to 0.40 mm]. The backlash must be at least 0.002 inch [0.05 mm].

Install the Lubricating Oil Pump

1. Install a new gasket onto the mounting flange of the oil pump.
2. Position the pump into the mounting hole in the cylinder block. Make sure that the gear teeth of the pump align with the camshaft gear teeth.
3. Install the capscrews and lockwashers to fasten the pump to the cylinder block. Tighten the capscrews to 35 to 45 ft.-lbs. [47 to 61 N•m] torque.
4. Check the backlash of the pump gear, Fig. 14-37. Use the same procedure that you used to check the backlash of the accessory drive gear.

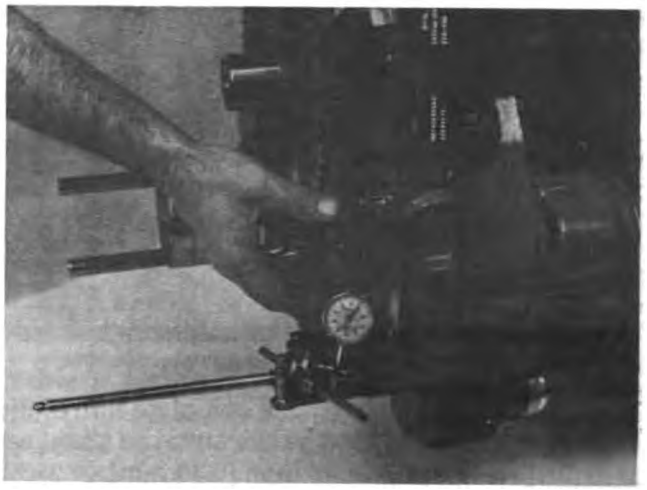

Fig. 14-37 (N114264). Check The Backlash Of The Pump Gear.

5. Install the power steering pump to the oil pump, if the engine is so equipped.
6. Install the oil filter assembly to the oil pump, if the engine is so equipped. Make sure that you install a new O-ring and filter element. Tighten the center bolt to 25 to 35 ft.-lbs. [34 to 47 N•m] torque.

Install the Gear Case Cover

1. Put the new gear cover gasket onto the gear case cover. Use Lubriplate or an equivalent to

Digitized by Google

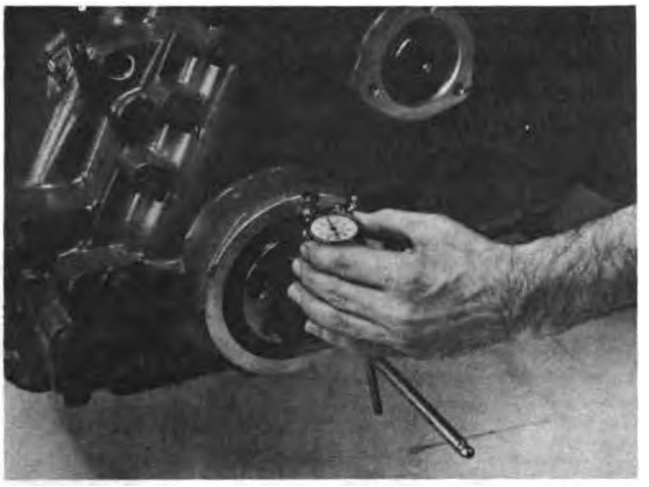

Fig. 14-38 (N114265). Check The Concentricity Of The Oil Seal Bore.

hold the gasket on the gear case cover. See the parts catalog to find the correct gasket part number.

2. Install the gear cover onto the dowel pins. Tighten the capscrews to 45 to 55 ft.-lbs. [61 to 74 N•m] torque.
3. Cut off the ends of the gear cover gasket so that the gasket is even with the mounting flange for the oil pan.
4. Check the alignment of the oil pan mounting flange of the gear cover with the oil pan mounting flange of the cylinder block. The gear cover flange must be even with the cylinder block flange within ±0.004 inch [0.10 mm].
5. The oil seal bore in the gear cover must have a common center with the crankshaft. Use a dial indicator gauge to check the concentricity, Fig. 14-38. The total indicator reading must not exceed 0.010 inch [0.25 mm]. If the reading exceeds 0.010 inch [0.25 mm], do the following:
   a. Remove the gear cover.
   b. Remove the gasket from the gear cover.
   c. Make sure that the gear cover and cylinder block are clean. Make sure that the dowel pins in the cylinder block are not damaged.
   d. Install a new gasket to the gear cover.
   e. Install the gear cover to the cylinder block. Make sure that the gear cover is correctly installed on the dowel pins.
   f. Check the concentricity.
6. Install a new oil seal into the gear cover. Use the Part No. ST-1259 Mandrel and the Part No. 3375151 Pilot to install the seal, Fig. 14-39. Use the Part No. ST-1172 Mandrel to install the seal when the end of the crankshaft is tapered.
7. Install a new accessory drive oil seal into the gear cover. Use the Part No. ST-1173 Mandrel to install the seal, Fig. 14-40.

Caution: Do not use any lubricants when you install LDL (lay down lip) TFE oil seals. The lip of the seal and the outside diameter of the shaft must be clean and dry.

8. Install the support bearing or thrust plate into the gear cover. Make sure that the clearance between the support bearing or the thrust plate and the end of the camshaft is correct.

Fig. 14-39 (N114266). Install The Oil Seal.

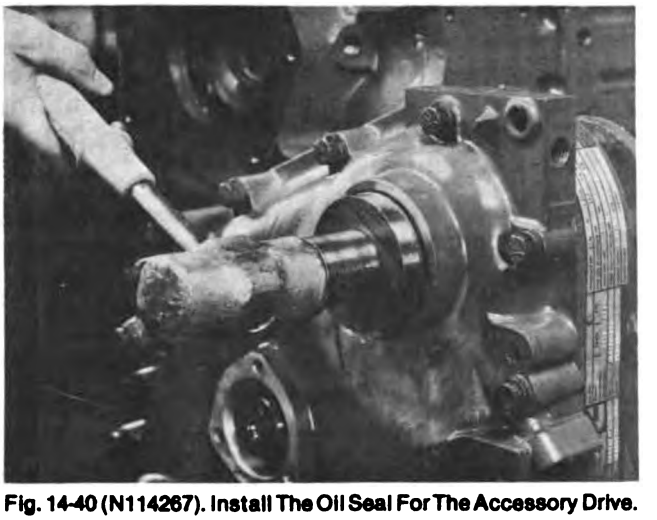

Fig. 14-40 (N114267). Install The Oil Seal For The Accessory Drive.

Digitized by Google

Fig. 14-41 (N11440). The Camshaft Thrust Plate.

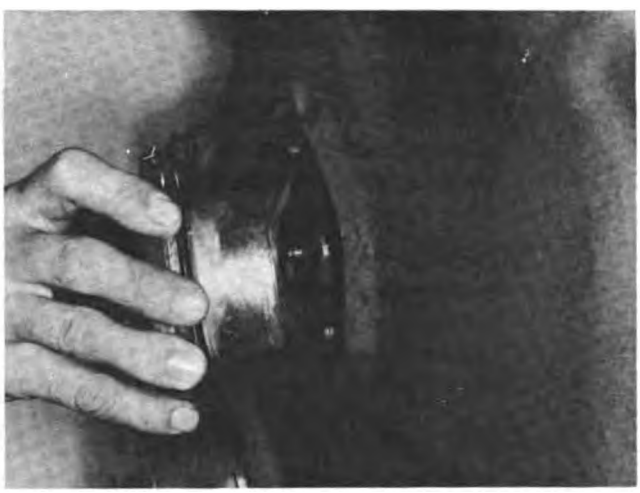

Fig. 14-42 (N114187). The Camshaft Bearing Support.

Note: Some engines use a support bearing in the gear cover and some use a thrust plate, Fig. 14-41 and Fig. 14-42. The support bearing clearance must be 0.008 to 0.013 inch [0.20 to 0.33 mm]. The thrust plate clearance must be 0.001 to 0.005 inch [0.03 to 0.13 mm].

a. Remove the O-ring and spacers from the support bearing or thrust plate.

b. Put the support bearing or thrust plate into the bore in the gear cover. Hold the bearing or plate so that it will be against the end of the camshaft.

c. Use a feeler gauge to measure the space between the mounting flange of the support bearing or thrust plate and gear cover, Fig. 14-43. Use this measurement to find the thickness of the spacers needed to provide the correct clearance.

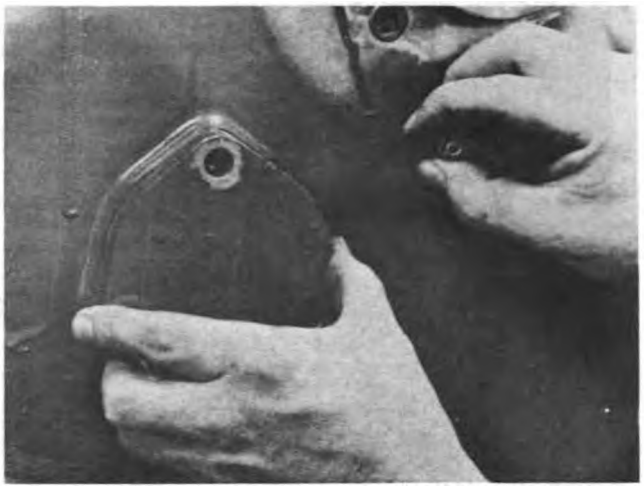

Fig. 14-43 (N114268). Measure The Clearance For The Bearing Support.

d. Use a micrometer to measure the thickness of the spacers. Add or remove the spacers as needed to make the clearance correct.

e. Install a new O-ring and the spacers to the support bearing or thrust plate. Install the bearing or plate into the gear cover. Tighten the capscrews to 15 to 20 ft.-lbs. [20 to 27 N•m] torque.

Install the Accessory Drive Pulley

1. Install the tapered end of the pin into the accessory drive shaft, Fig. 14-44.

Note: The pipe plug in the gear cover can be removed so that you can see the timing marks on the gears. Make sure that the timing marks are aligned, Fig. 14-45. If the pipe plug has been removed, install the plug. Tighten the pipe plug to 35 to 45 ft.-lbs. [47 to 61 N•m] torque.

2. Apply a coat of lubriplate or an equivalent to the drive shaft.

3. Align the keyway of the pulley with the roll pin in the shaft. Push the pulley over the roll pin and onto the shaft. Use your hands to start the pulley onto the shaft.

4. Install the Part No. 3376326 Pulley Assembly Tool to the drive shaft. Use the 3376326 to install the pulley onto the shaft, Fig. 14-46.

Digitized by Google

Fig. 14-44 (N114269). Install The Pin Into The Accessory Drive Shaft.

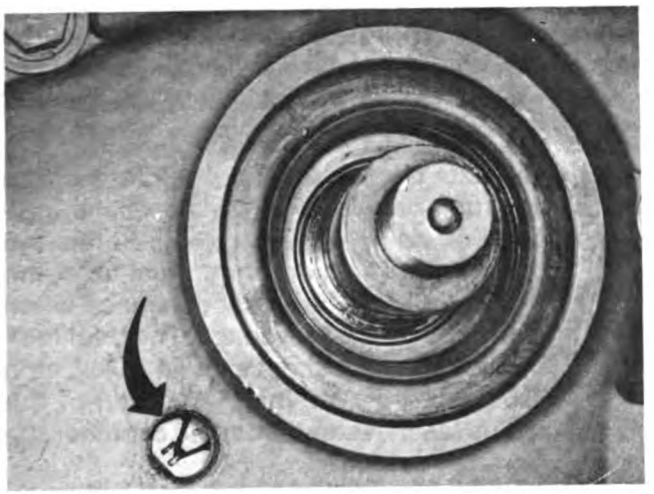

Fig. 14-45 (N114143). The Timing Marks For The Accessory Drive.

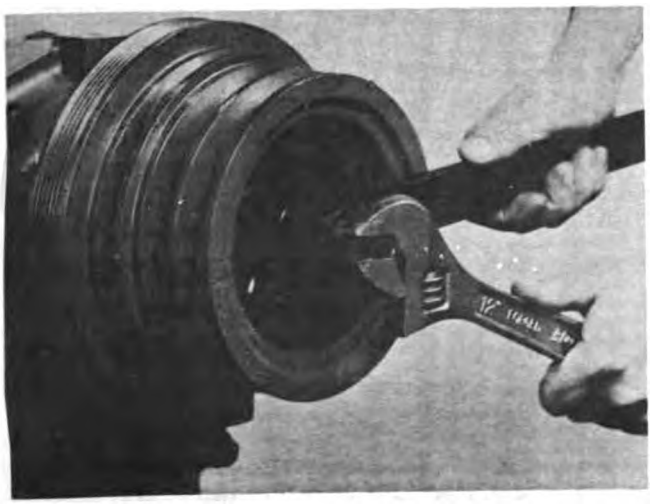

Fig. 14-46 (N114270). Install The Accessory Drive.

5. Remove the ST-386.
6. Install the rubber keyway seal into the pulley keyway. Make sure that one leg of the seal is toward the drive shaft.
7. Install the flat washer and pulley retaining nut.
   a. Tighten the flanged retaining nut to 300 to 310 ft.-lbs. [407 to 420 N•m] torque.
   b. Tighten the retaining nut that does not have a flange to 90 to 110 ft.-lbs. [122 to 149 N•m] torque.

Note: The flanged retaining nut can be used to rotate the crankshaft.

Install the Air Compressor

The coupling driven single cylinder air compressor must be timed to the engine firing order. Follow these instructions to install and time the single cylinder air compressor.

1. Rotate the engine crankshaft until the "A" valve set mark on the accessory drive pulley is aligned with the pointer on the gear cover.
2. Hold the air compressor so that you are looking at the coupling end of its crankshaft. Rotate the air compressor crankshaft until the keyway or timing mark is positioned half-way between 9 o'clock and 10 o'clock.
3. Install the splined coupling to the air compressor crankshaft.
4. Install the air compressor and a new gasket to the accessory drive. Tighten the capscrews to 40 to 45 ft.-lbs. [54 to 61 N•m] torque.
5. Install the support bracket to the air compressor and the cylinder block. Tighten the capscrews to 30 to 35 ft.-lbs. [40.6 to 47 N•m] torque.

Install the Vibration Damper

The Vibration Damper Mounting Flange *(Tapered End Crankshaft)*

Make sure that the mounting flange fits correctly onto the crankshaft.

1. Apply an even coat of blue compound (Prussian Blue) to the tapered end of the crankshaft.
2. Put the flange onto the crankshaft.

Digitized by Google

3. Rotate the flange approximately 1/8 of a turn. Remove the flange.
4. Check the pattern of blue compound on the inside diameter of the flange. The pattern must show, at the larger diameter of the crankshaft, the flange has 100 percent contact with the crankshaft. The 100 percent contact must extend at least 1/2 inch [12.7 mm] toward the end of the crankshaft. The remainder of the flange must have at least 70 percent contact with the crankshaft.
5. Clean the blue compound from the flange and the crankshaft.
6. Use Magnaglo inspection to check the flange for cracks.
7. If the flange does not fit onto the crankshaft correctly:
   a. Make sure that the inside diameter of the flange and the outside diameter of the crankshaft are free of damage or rough surfaces.
   b. Apply a coat of Grade A (280 grit) lapping compound to the inside diameter of the flange.
   c. Put the flange onto the crankshaft. Rotate the flange one-half turn in each direction until the flange fits onto the crankshaft correctly.
   d. Clean the lapping compound from the flange and the crankshaft.

Caution: Make sure that none of the lapping compound gets onto the crankshaft seal or into the engine.

   e. Follow Steps 1 through 5 to make sure that the flange fits correctly onto the crankshaft.

Install the Mounting Flange and Vibration Damper

1. Apply lubricant to the area of the crankshaft on which the flange will be installed. Use SAE 30 preservative oil.

Caution: Make sure that the lubricant does not touch the crankshaft seal. Do not apply lubricant when you install any of the cast iron flanges, Part No. 115562, 115563, 175183 or 175185.

2. Install the mounting flange onto the crankshaft. Use your hands to push the flange onto the crankshaft.
3. Install the retainer and capscrew to hold the flange onto the crankshaft. Tighten the Part No. 140410 capscrew to 180 to 200 ft.-lbs. [244 to 271 N•m] torque. Tighten the Part No. 196653 capscrew to 250 to 270 ft.-lbs. [339 to 366 N•m] torque.
4. Install the vibration damper to the mounting flange. Install the capscrews with new lockplates. Bend the ends of the lockplates against the head of the capscrews. Tighten the capscrews to 55 to 80 ft.-lbs. [74.5 to 81 N•m] torque.
5. Measure the movement of the circumference and the face of the vibration damper.
   a. Install the dial indicator gauge to the gear cover as shown in Fig. 14-47. Position the tip of the indicator on point "A". Rotate the crankshaft. The total indicator reading must not exceed 0.003 inch [0.08 mm] per 1.0 inch [25.4 mm] of vibration damper diameter.
   b. Measure the movement of the face of the vibration damper. Put the tip of the indicator on point "B" (Fig. 14-47). Rotate the crankshaft. The crankshaft must be at the front or rear of the thrust clearance when you measure the movement. The total indicator reading must not exceed 0.0025 inch [0.064 mm] per 1.0 inch [25.4 mm] of the radius (as measured from the center of the vibration damper).

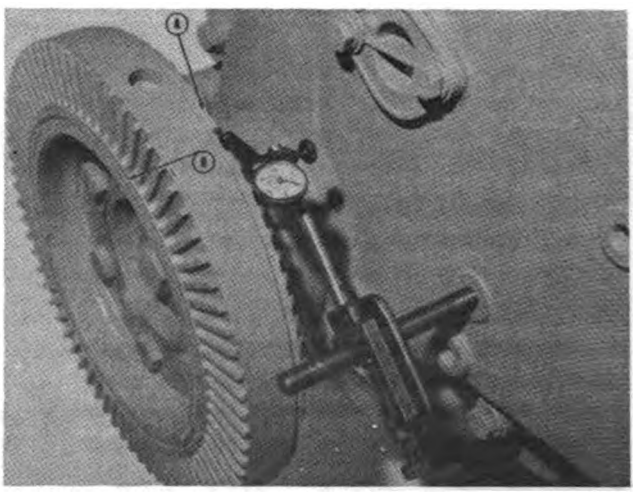

Fig. 14-47 (N114140). Measure The Movement On The Circumference And The Face Of The Vibration Damper.

Digitized by Google

Install the Vibration Damper and Pulley
(Straight End Crankshaft)

1. Install the front engine support, if the engine has one. Tighten the capscrews to 55 ft.-lbs. [75 N•m] torque.

Caution: Make sure that the mounting surfaces of the vibration damper and pulley are clean and dry. Do not apply any lubricant.

2. Install two guide pins into the end of the crankshaft.
3. Install the pulley and vibration damper onto the guide pins.
4. Apply a coat of clean SAE 30 lubricating oil to the threads of the capscrews and face of the washers.
5. Install the capscrews and washers to hold the pulley and vibration damper onto the crankshaft. Tighten the capscrews to the torque valves given in Table 10.

Table 10: Vibration Damper Capscrew Torque Values

Capscrew Size	SAE Grade Number	Minimum ft.-lbs. [N•m]	Maximum ft.-lbs. [N•m]
1/2 inch	8	115 [156]	125 [170]
5/8 inch	8	180 [244]	200 [271]
5/8 inch	5	150 [203]	170 [231]

6. Measure the movement on the circumference and the face of the vibration damper. Follow the procedure given to install the Mounting Flange and Vibration Damper, Steps 5a and 5b.

Install the Water Pump

The Eccentric Water Pump

1. Install the water pump support and a new gasket to the cylinder block, Fig. 14-48. Tighten the capscrews to 30 ft.-lbs. [41 N•m] torque.
2. Install the water pump into the support. Install the fan bracket (Fig. 14-49) or clamp ring if the engine does not have a fan bracket. Install the lockwashers and capscrews. Tighten the capscrews to 3 to 5 ft.-lbs. [4 to 6.8 N•m] torque. Turn the body of the pump clockwise so that the water pump pulley moves toward the accessory drive pulley.

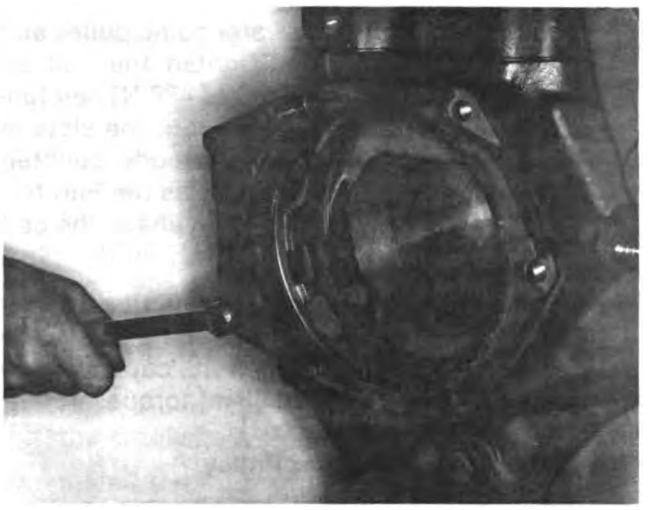

Fig. 14-48 (N114191). Install The Water Pump Support

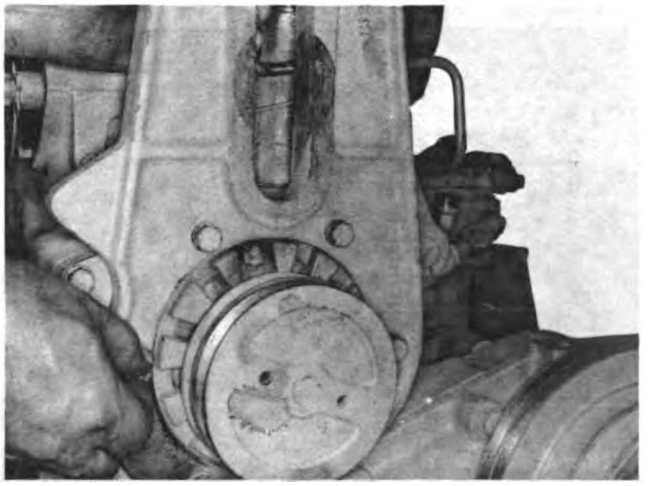

Fig. 14-49 (N114144). Install The Fan Bracket.

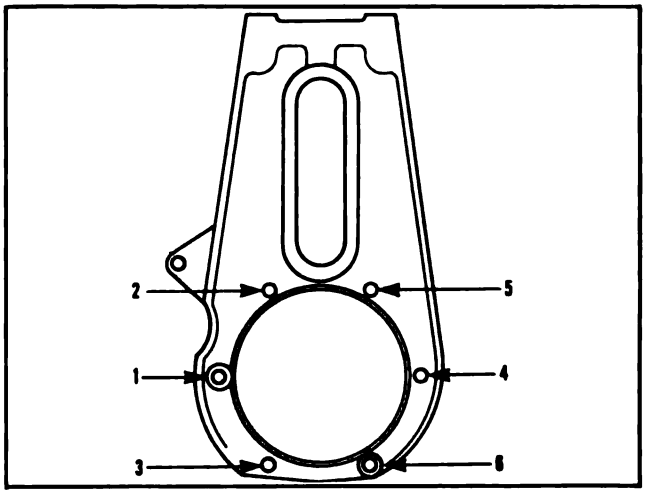

Fig. 14-50. The Tightening Sequence For The Fan Bracket.

Digitized by Google

3. Install the belt onto the water pump pulley and accessory drive pulley. Tighten the belt so that it has 90 to 110 lb. [400 to 489 N] belt tension. Put a large screwdriver into the slots in the pump body and turn the body counterclockwise to tighten the belt. Use the Part No. ST-1138 Belt Tension Gauge to check the belt tension.
4. Tighten the capscrews for the fan bracket or clamp ring. Follow the tightening sequence shown in Fig. 14-50. Tighten the capscrews to 12 to 15 ft.-lbs. [16 to 20 N•m] torque.

The Water Pump with Idler Pulley

1. Install the water pump and idler assembly and a new gasket to the cylinder block, Fig. 14-51.

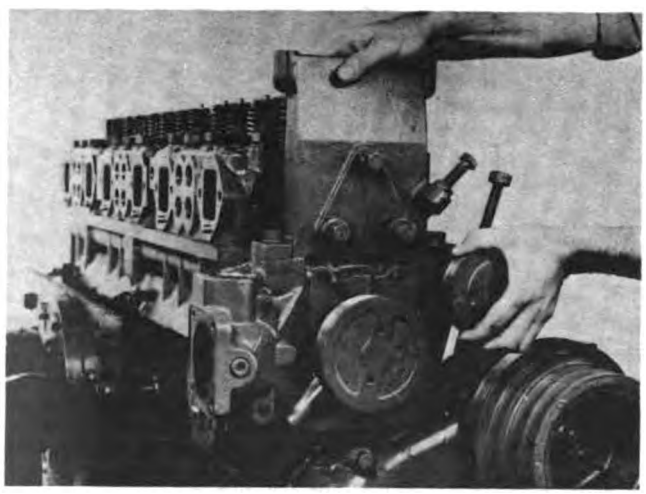

Fig. 14-51 (N114271). Install The Water Pump And Idler Pulley.

2. Tighten the capscrews in the sequence shown in Fig. 14-52.
   a. Tighten the capscrews to 10 ft.-lbs. [14 N•m] torque.
   b. Tighten the capscrews to 20 ft.-lbs. [27 N•m] torque.
   c. Tighten the capscrews to 30 to 35 ft.-lbs. [41 to 47 N•m] torque.
3. Install the belts onto the water pump, water pump idler and accessory drive pulleys.
   a. Tighten the locknut for the idler pulley shaft to 5 to 6 ft.-lbs. [6.7 to 8 N•m] torque.
   b. Turn the adjusting screw to tighten the belts. Tighten the belts so that they have 100 to 110 lbs. tension. Use the Part No. ST-1274 Belt Tension Gauge to check the belt tension, Fig. 14-53.
   c. Tighten the locknut for the idler pulley shaft to 45 to 55 ft.-lbs. [61 to 74 N•m] torque.
   d. Check the belt tension again after you have tightened the locknut. The belt tension must be 120 to 140 lbs. [534 to 623 N]. If the tension is not correct, loosen the locknuts and repeat steps a, b and c.
4. Install the fan hub bracket to the water pump housing. Tighten the capscrews to 70 to 80 ft.-lbs. [95 to 108 N•m] torque.

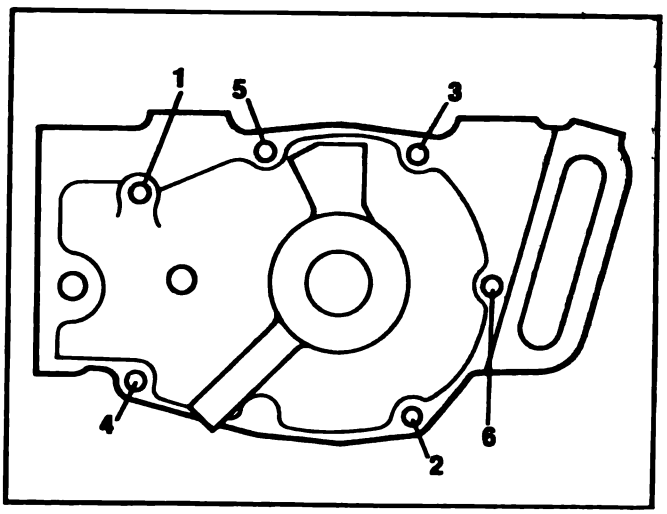

Fig. 14-52. The Tightening Sequence For The Water Pump With Idler Pulley.

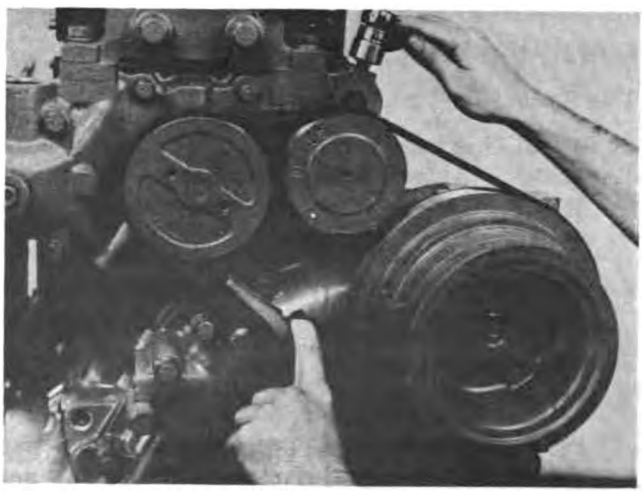

Fig. 14-53 (N114272). Adjust The Belt Tension.

Digitized by Google

Install the Rear Cover and Oil Seal

1. Make sure that the oil seal area on the crankshaft is clean and dry. Use a crocus cloth to polish the crankshaft. Use a clean cloth to clean the crankshaft.
2. Install the rear cover and a new gasket to the cylinder block. Tighten the capscrews only enough to hold the rear cover in position.
3. Install the Part No. ST-997 Oil Seal Driver onto the crankshaft and into the bore of the rear cover. Use the ST-997 to align the rear cover with the crankshaft. The ST-997-6 Buttons must be removed from the ST-997 Driver.
4. Check the alignment of the rear cover with a dial indicator gauge, Fig. 14-54.

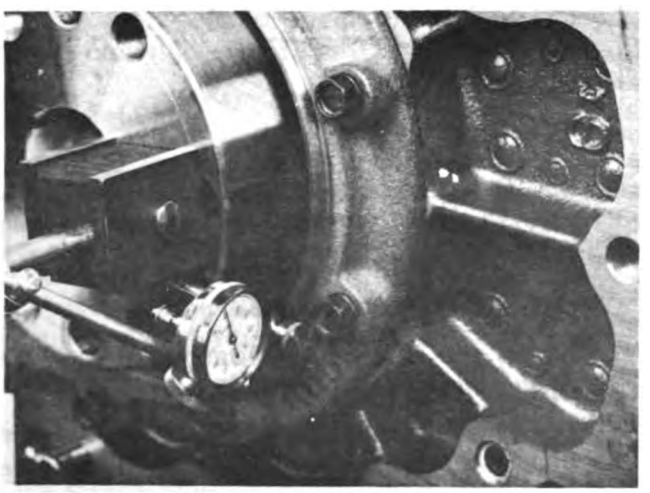

Fig. 14-54 (N114273). Check The Alignment Of The Rear Cover.

   a. The rear cover must be on a common center with the crankshaft within 0.010 inch [0.25 mm] total indicator reading.
   b. The rear cover must be square to the centerline of the crankshaft within 0.010 inch [0.25 mm] total indicator reading.
   c. The rear cover must be within 0.004 inch [0.10 mm] of being flat with the oil pan flange of the cylinder block.
   d. Tighten the capscrews to 30 to 35 ft.-lbs. [40.6 to 47 N•m] torque.
5. Remove the ST-997 from the crankshaft.
6. Cut off the excess gasket material so that the gasket is even with and not more than 0.010 inch [0.25 mm] above the oil pan flange.
7. Install the seal assembly tool onto the crankshaft. Put the largest inside diameter part of the tool toward the cylinder block.

Note: "LDL TFE" (Lay-down Lip, Teflon) oil seals for service replacement have an assembly tool which protects the seal lip during shipment and installation.

Caution: The "LDL TFE" oil seal must be installed with the lip of the seal and the crankshaft clean and dry. Do not use any kind of lubricant.

8. Push the oil seal from the assembly tool onto the crankshaft. Remove the assembly tool.
9. Install the oil seal into the rear cover. Install the ST-997-6 Buttons into the ST-997 Seal Driver. Use the seal driver to push the oil seal into the rear cover, Fig. 14-55.

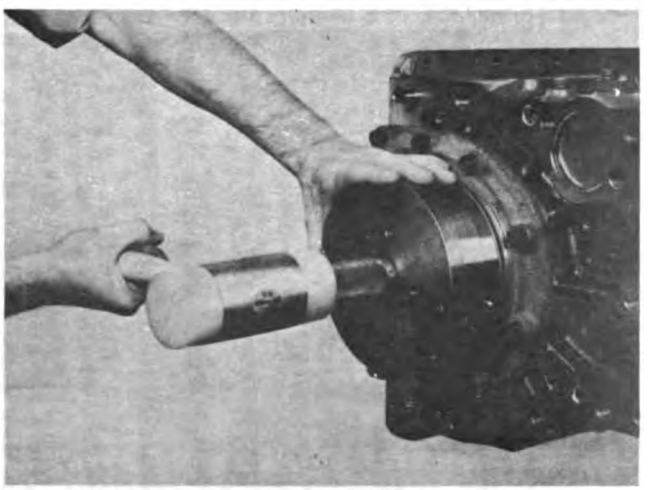

Fig. 14-55 (N114274). Install The Oil Seal.

Install the Flywheel Housing

The Dry Flywheel Housing

1. Make sure that the mounting surface of the flywheel housing is clean and free from damage.
2. Install a new camshaft bore gasket onto the flywheel housing. Use gasket cement to install the gasket to the housing. The cement must be completely dry before you install the flywheel housing.

Note: The 2½ inch cam (Big Cam) engines use a cup plug seal in the rear camshaft bore. These engines do not require a camshaft bore gasket in the flywheel housing.

Digitized by Google

3. Remove the dowels when you install a new flywheel housing. Remove the dowels if they are damaged or the outside diameter of the dowels measure less than 0.5005 inch [12.71 mm].
4. Install two studs into the cylinder block to support the flywheel housing.
5. Install the flywheel housing. Tighten the capscrews to 10 to 20 ft.-lbs. [13.5 to 27 N•m] torque.
6. Remove the studs. Install and tighten the remaining capscrews.

Check the Location of the Bore

1. Install the Part No. ST-1325 Dial Gauge Attachment to the crankshaft. Install the Part No. 3376050 Dial Gauge to the attachment, Fig. 14-56.

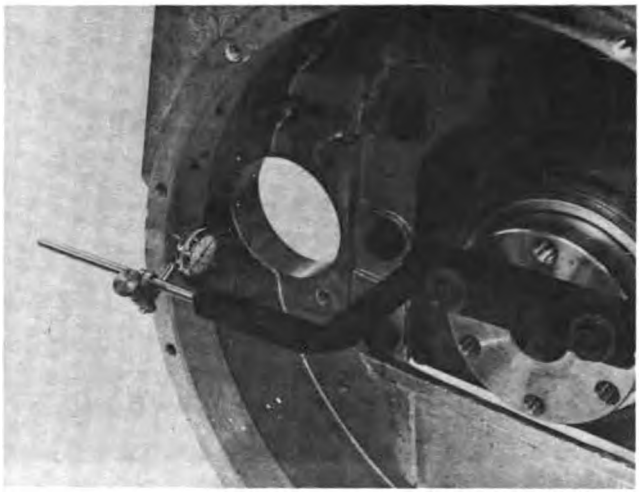

Fig. 14-56 (N114275). Check The Location Of The Bore.

2. Use chalk to mark the housing at the positions of 12, 3, 6 and 9 o'clock.
3. Rotate the crankshaft to check the housing bore at 3 o'clock and 9 o'clock. If the total indicator reading exceeds the limits given in Table 11, move the housing in a horizontal direction one-half of the distance of the total indicator reading. Use a pry bar to move the housing.
4. Rotate the crankshaft to check the housing bore at 12 o'clock and 6 o'clock. Follow the procedure given in Step 3, but move the housing in a vertical direction until the reading is within the limits.
5. Check the circumference of the bore. The total indicator reading must not exceed the limits given in Table 11.
6. After the readings are within the limits, tighten the capscrews in the sequence given in Fig. 14-57 to 140 to 160 ft.-lbs. [190 to 217 N•m] torque.

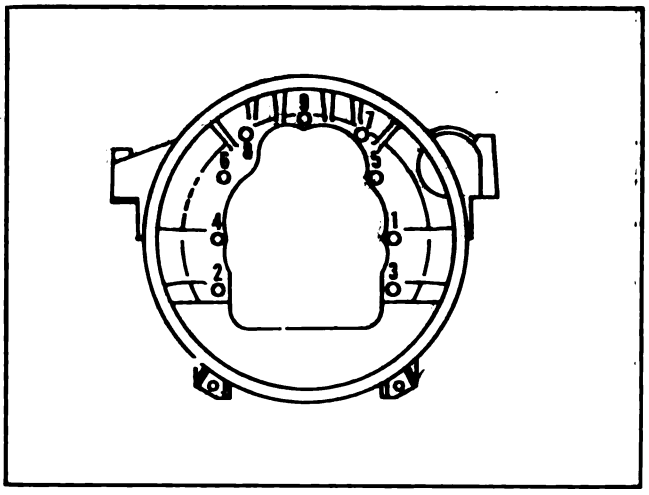

Fig. 14-57. Tightening Sequence For The Flywheel Housing Capscrews.

Check the Alignment of the Housing Face

1. Install the dial gauge attachment and dial gauge as shown in Fig. 14-58.
2. Push the crankshaft toward the front of the engine to remove the crankshaft end clearance.

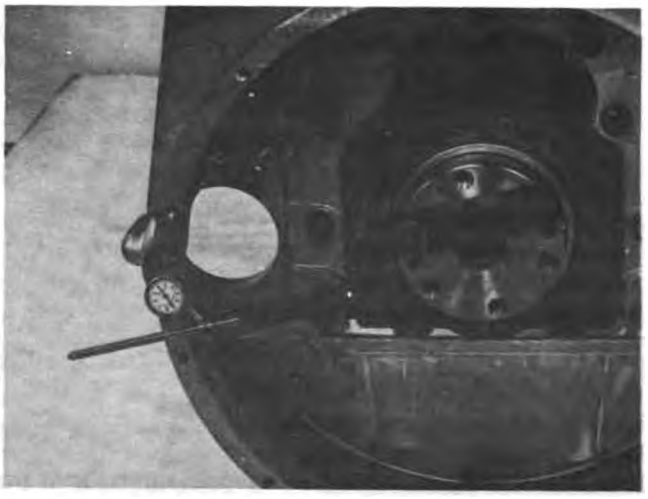

Fig. 14-58 (N114276). Check The Alignment Of The Housing Face.

Digitized by Google

Table 11: Flywheel Housing Specifications — Inch [mm]

SAE No.	Bore Diameter (For Reference Only)	Bore Location Tolerance	Face Alignment Tolerance
00	31.000 to 31.010 [787.40 to 787.65 mm]	0.012 [0.30 mm] TIR	0.012 [0.30 mm] TIR
0	25.500 to 25.520 [647.70 to 647.95 mm]	0.010 [0.25 mm] TIR	0.010 [0.25 mm] TIR
1/2	23.000 to 23.008 [584.00 to 584.20 mm]	0.010 [0.25 mm] TIR	0.010 [0.25 mm] TIR
1	20.125 to 20.130 [534.27 to 534.40 mm]	0.008 [0.20 mm] TIR	0.008 [0.20 mm] TIR
2	17.625 to 17.630 [447.68 to 447.80 mm]	0.008 [0.20 mm] TIR	0.008 [0.20 mm] TIR
3	16.125 to 16.130 [409.58 to 409.70 mm]	0.008 [0.20 mm] TIR	0.008 [0.20 mm] TIR
4	14.250 to 14.255 [361.95 to 362.08 mm]	0.006 [0.15 mm] TIR	0.006 [0.15 mm] TIR
5	12.375 to 12.380 [314.33 to 314.45 mm]	0.006 [0.15 mm] TIR	0.006 [0.15 mm] TIR
6	10.500 to 10.505 [266.70 to 266.83 mm]	0.006 [0.15 mm] TIR	0.006 [0.15 mm] TIR

3. Rotate the crankshaft and check the alignment of the face of the flywheel housing. Make sure that the crankshaft is pushed toward the front of the engine as you check the alignment.
4. The total indicator reading must not exceed the limits given in Table 11.

The Dowel Pins

1. If the dowel pins were removed from the cylinder block, use a drill and reaming fixture to ream the dowel holes to the next oversize.
2. Install the dowel pins. The dowels must be even with or 0.010 inch [0.25 mm] below the surface of the housing that is closest to the flywheel.

The Flywheel Housing with Wet Clutch Seal

If the engine is to be tested with a dynamometer, do not install the wet clutch seal until after the engine is tested. Any usage without clutch oil will destory the clutch seal.

1. Install the housing and a new O-ring onto the cylinder block.
2. Check the location of the bore and the alignment of the face. Use the same procedure to check the location and alignment as for the dry flywheel housing.
3. Use the same procedure to install oversize dowel pins as for the dry housing.
4. Install a new seal into the seal carrier. The lip of the seal must be toward the flywheel. Use the parts catalog to find the correct seal part number.
5. Install the seal carrier and new gasket onto the flywheel housing. Tighten the Nylok capscrews to 2 to 3 ft.-lbs. [2.7 to 4 N•m] torque.
6. Check the alignment of the seal carrier. Align the seal carrier so that it is on a common center with the crankshaft within 0.008 inch [0.20 mm] total indicator reading.
7. Tighten the capscrews to 8 to 9 ft.-lbs. [10.8 to 12.2 N•m] torque.

Caution: Never operate the engine without clutch oil in the housing. Operating without clutch oil wil damage the clutch seal and clutch.

Install the Flywheel

Note: When you install a new flywheel, remove the dowels.

1. Install two guide studs that have 5/8-18 threads and are 6 inches [152 mm] long into the crankshaft flange.
2. Install the flywheel onto the studs. Align the dowel holes in the flywheel and crankshaft.
3. Install and tighten the capscrews.
   a. Lubricate the threads of the capscrews and the face of the hardened washers with 30W oil.
   b. Use the sequence shown in Fig. 14-59 and tighten the capscrews until the flywheel is flat against the crankshaft flange.
   c. Remove the guide studs and install the remaining two capscrews.
   d. Tighten the capscrews that use the hardened flatwashers to 200 to 220 ft.-lbs. [271 to 298 N•m] torque.
   e. Tighten the capscrews that have safety wire holes in the head of the capscrew to 190 to 200 ft.-lbs. [258 to 271 N•m] torque.

Digitized by Google

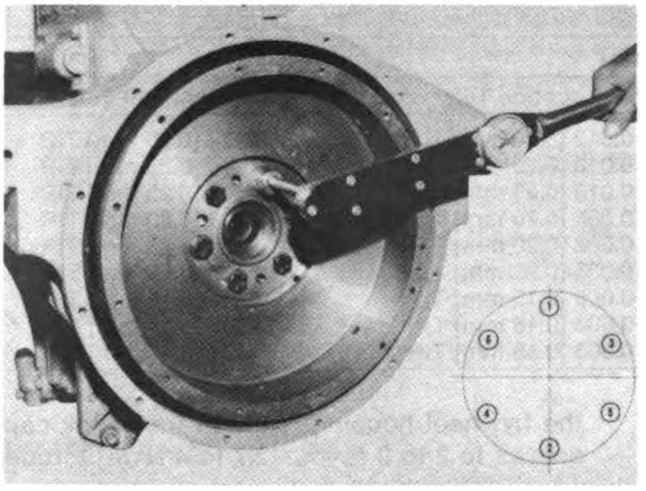

Fig. 14-59 (N11451). Tightening Sequence For The Flywheel Capscrews.

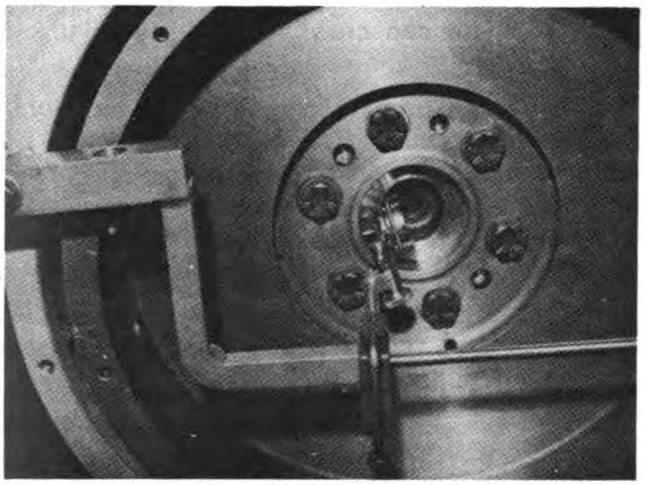

Fig. 14-60 (N114138). Check The Location Of The Bearing Bore.

4. Check the location of the pilot bearing bore.
   a. Install the ST-1325 attachment and 3376050 gauge onto the flywheel housing. Put the trip of the indicator in the position shown in Fig. 14-60.
   b. The total indicator reading must not exceed 0.005 inch [0.13 mm] in one complete revolution of the flywheel.
5. Check the alignment of the clutch face of the flywheel. The crankshaft end movement will change the indicator reading. Make sure that the crankshaft is moved all of the way toward the front of the engine.
   a. Move the indicator so that it is positioned as shown in Fig. 14-61.

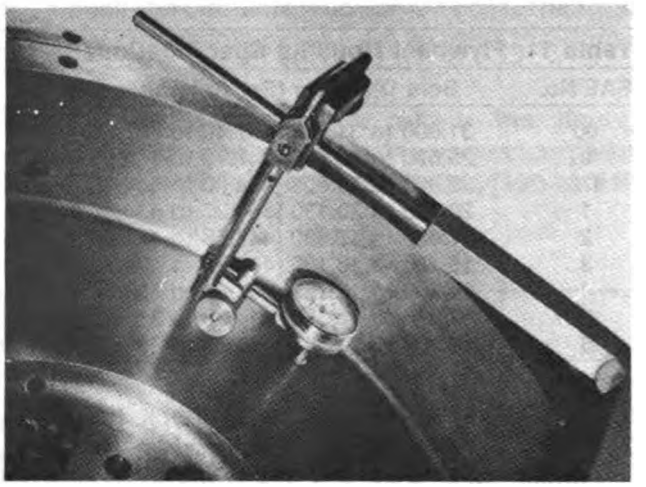

Fig. 14-61 (N114139). Check The Alignment Of The Face.

   b. Rotate the crankshaft and read the indicator. The total indicator reading must not exceed 0.0005 inch [0.013 mm] per 1 inch [25.4 mm] of flywheel diameter.

Install the Oil Pan

Note: The oil pan used for the 80 degree tilt engine has machined bosses for the oil gauge and filter bracket, the alternator bracket and lifting eyes. Install those parts when you install the oil pan.

1. Install two guide studs into the oil pan flange of the cylinder block.
2. Put the oil pan and new gasket over the guide studs. Use your hand to install the capscrews with washers and lockwashers.

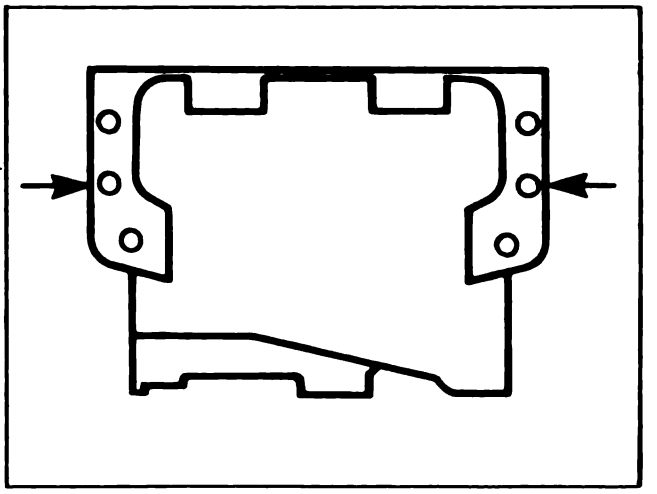

Fig. 14-62. Install Two Capscrews Into The Buttress End Of The Oil Pan.

Digitized by Google

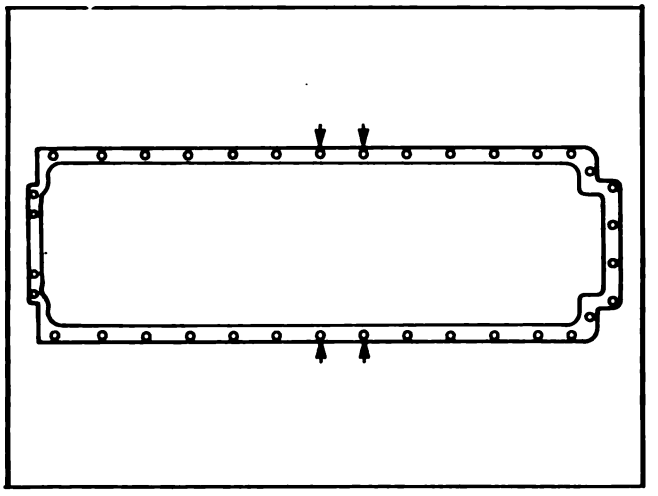

Fig. 14-63. Install The Capscrews Into The Oil Pan.

3. Use the following sequence to tighten the capscrews. This will prevent damage to the oil pan or flywheel housing.

   a. Install and tighten the middle capscrew in each of the two buttresses on the flywheel housing, Fig. 14-62.

   b. Tighten two capscrews on each side of the oil pan flange. Tighten the capscrews that are located halfway between the front and the rear of the oil pan, Fig. 14-63.

   c. Remove the capscrews that were installed in Step 3a. This is necessary to provide the clearance to perform the following step.

   d. Tighten the capscrews to hold the rear corners of the oil pan to the cylinder block.

   e. Remove the guide studs and install the capscrews.

   f. Tighten the capscrews that hold the oil pan to the cylinder block and front cover. Tighten the capscrews to 35 to 40 ft.-lbs. [47 to 54 N•m] torque.

   g. Tighten the capscrews that hold the oil pan buttress to the flywheel housing buttress. Tighten the capscrews to 70 to 80 ft.-lbs. [95 to 108 N•m] torque.

   h. Tighten the capscrews that hold the oil pan to the rear cover plate. Tighten the capscrews to 15 to 20 ft.-lbs. [20 to 27 N•m] torque.

Install the Oil Suction Tube

1. Apply clean lubricating oil to the tube nuts and tube sleeves. Assemble the tube sleeve and nuts onto the oil stuction tube. Install the oil pump adapter and oil pan flange onto the tube nuts but do not tighten.

2. Install the oil pan flange and a new gasket onto the oil pan. Do not tighten the capscrews.

3. Push the tube and sleeve assembly into the oil pump adapter until it is against the bottom in the adapter. Use your hand to tighten the nut. Then tighten the nut an additional 1 to 1-1/4 turn, Fig. 14-64.

4. Use your hand to tighten the tube nut on the oil pan suction flange. Tighten the capscrews that hold the suction flange to the oil pan to 30 to 35 ft.-lbs. [41 to 47 N•m] torque. Tighten the tube nut until it is against the stop on the suction flange.

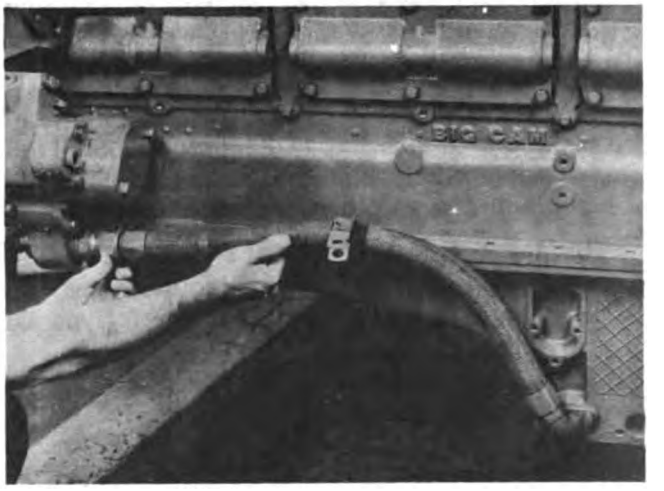

Fig. 14-64 (N114277). Install The Oil Suction Tube.

Install the Fuel Pump

1. Install the buffer or spline to the coupling of the air compressor or accessory drive.

2. Install the fuel pump and new gasket to the air compressor or accessory drive. Tighten the capscrews to 30 to 35 ft.-lbs. [41 to 47 N•m] torque, Fig. 14-65.

3. Install the fuel line to the solenoid valve.

Digitized by Google

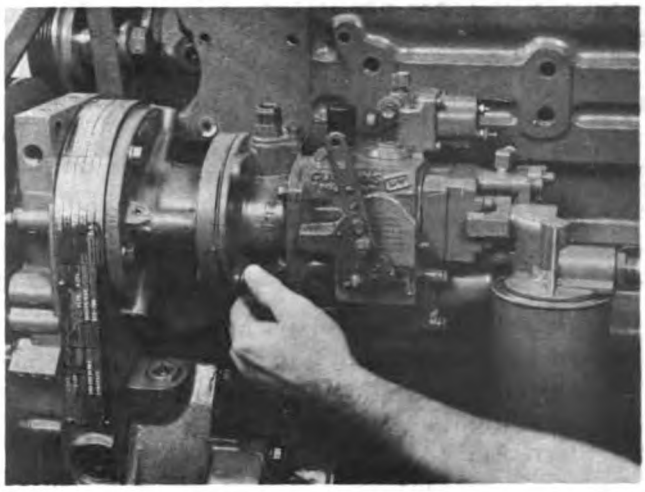

Fig. 14-65 (N114278). Install The Fuel Pump.

Install the Injectors

1. Install new O-rings onto the injectors.
2. Apply a light coat of clean lubricating oil to the injector body and O-rings.
3. Install the injector into the cylinder head. Align the screen on the fuel inlet hole so that it is toward the exhaust side of the cylinder head.
   a. Use the Part No. 3376000 Injector Puller to install the PT (type D) injectors. Install the tool onto the injector and use a quick hand push to push the injector into the bore.
   b. Use the Part No. 3375161 Injector Puller to install the top stop injectors. Use the same procedure as for the PT (type D) injectors.
4. Install the hold-down plate, with the counterbore up, onto the injector.
5. Install the plunger link into the injector. Tighten the capscrews for the hold-down plate in increments of 4 ft.-lbs. [5 N•m] torque until they are tightened to 10 to 12 ft.-lbs. [14 to 16 N•m] torque. Tighten the nylok capscrews to 12 to 14 ft. lbs. [16 to 19 N•m] torque.
6. Check the injector plungers for free movement after you tighten the hold-down plate. If the plunger does not move freely, loosen the capscrews then tighten to the correct torque. Check the injector plungers for the top-stop injectors. The injector plunger must rotate freely.

Install the Thermostat Housing and Water Manifold

1. Install new O-rings onto the water manifold coupling pipes. Install the coupling pipes into the water manifold sections.
2. Apply grease to the sealing rings for the water manifold and thermostat housing. Install the sealing rings into the counterbores in the cylinder heads.
3. Position the water manifold assembly onto the cylinder heads. Install and tighten the capscrews to 30 to 35 ft.-lbs. [41 to 47 N•m] torque.
4. Install the front section of the thermostat housing and a new gasket. Make sure that the thermostat has been correctly installed into the housing according to the instructions given in Group 8. Tighten the capscrews to 30 to 35 ft.-lbs. [41 to 47 N•m] torque. Install the water bypass tube.

Install and Adjust the Crossheads

1. Lubricate the end of the valve stems and the entire crosshead guide with clean oil.
2. Install the crossheads onto the crosshead guides. The adjusting screw must be toward the water manifold.
3. Loosen the adjusting screw locknut. Loosen the adjusting screw one full turn.

Note: Engines equipped with Jacobs Brake use special crossheads for the exhaust valves. See Group 20.

4. Hold the crosshead down against the valve stem that is nearest to the push rod. Use light pressure to hold the cross head. Turn the adjusting screw in until it touches the valve stem, Fig. 14-66.
5. Hold the crosshead adjusting screw in position and tighten the locknut. Tighten the locknut to 25 to 30 ft.-lbs. [34 to 41 N•m] torque.

Note: When the Part No. ST-669 Torque Wrench Adapter is used, tighten the locknut to 22 to 26 ft.-lbs. [30 to 35 N•m] torque.

6. Check the clearance between the crosshead and valve spring retainer, (1 and 2) Fig. 14-67. Use a wire gauge to check the clearance. The clearance must be a minimum of 0.025 inch [0.64 mm].

Digitized by Google

Fig. 14-66 (N114279). Adjust The Crosshead.

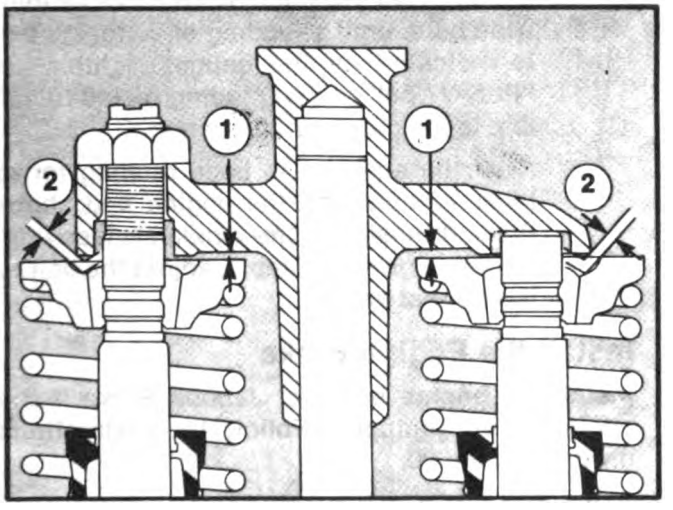

Fig. 14-67. Check These Areas For Clearance.

Install the Rocker Lever Housing

1. Put new rocker lever gaskets onto the cylinder heads. Install two guide pins into each cylinder head. The guide pins must be long enough to protrude above the top surface of the housing.
2. Loosen the locknuts for the adjusting screws. Loosen the adjusting screws so that there is a maximum of 1.250 inch [31.8 mm] from the top surface of the lever and the ball end of the adjusting screw, Fig. 14-68.

Caution: If the adjusting screw protrudes beyond the maximum shown in Fig. 14-68, the push rods can be damaged when you tighten the capscrews for the housing.

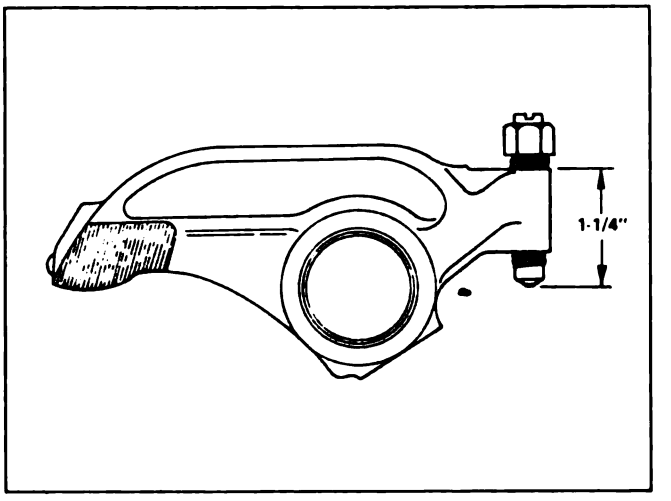

Fig. 14-68. The Correct Position For The Adjusting Screw.

3. Hold the levers in position and install the housing onto the guide pins and cylinder head. Put the ball end of the adjusting screws into the sockets of the push rods. Remove the guide pins.
4. Install the fan bracket brace, if the engine is so equipped, and the engine lifting brackets. Use the longest capscrews to install the fan bracket brace and the lifting brackets.

Note: Check the alignment of the oil spray nozzles for the 80 degree tilt engines. Use the ST-1182 spray nozzle locator to check the alignment.

5. Tighten the capscrews in the sequence shown in Fig. 14-69 to 55 to 65 ft.-lbs. [75 to 89 N•m] torque.

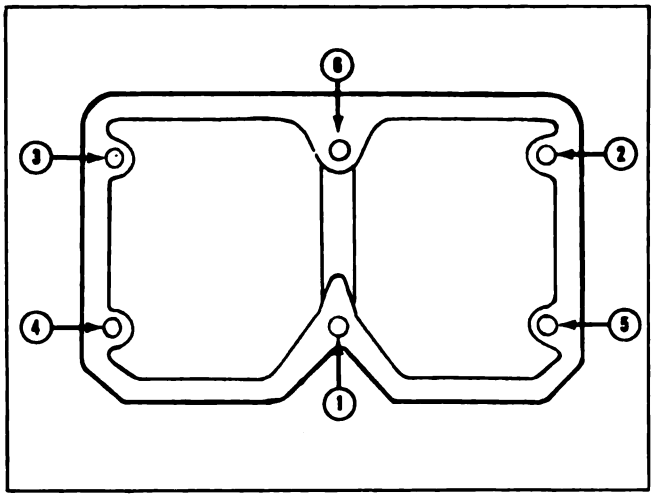

Fig. 14-69 (N11463). The Tightening Sequence For The Rocker Lever Housing Capscrews.

Digitized by Google

Install the Fan Hub and Pulley

1. Tighten the capscrews for the fan bracket brace to 70 to 80 ft.-lbs. [95 to 108 N•m] torque.
2. Install the fan hub assembly onto the fan hub bracket.
   a. Install the fan hub adjusting screw.
   b. If capscrews fasten the assembly to the bracket, tighten the capscrews to 3 to 5 ft.-lbs. [4 to 7 N•m] torque.
   c. If a Marsden nut is used to fasten the assembly to the bracket, tighten the nut to 45 to 55 ft.-lbs. [61 to 74 N•m] torque.
3. Loosen the adjusting screw so that the fan hub is in its lowest position.
4. Install new belts onto the fan hub pulley and accessory drive pulley.
5. Tighten the fan hub adjusting screw until the belts have 90 to 110 lbs. [400 to 489 N] tension. Use the ST-1138 gauge to check the belt tension.
6. Tighten the capscrews or Marsden nut to the correct torque value.
   a. Tighten the capscrews to 70 to 80 ft.-lbs. [95 to 108 N•m] torque.
   b. Tighten the Marsden nut to 400 to 450 ft.-lbs. [542 to 610 N•m] torque.
7. Loosen the fan hub adjusting screw 1/2 turn.

Belt Installation and Tension

1. To install the belts.
   a. When two or more identical belts are used on the same pulley, all of the belts must be replaced at the same time.
   b. Make sure the distance between the pulley centers is as short as possible when you install the belts. Do not roll the belts over the pulley. Do not use a tool to pry the belts onto the pulley.
   c. The pulleys must not be out of alignment more than 1/16 inch [1.59 mm] for each 12 inches [30.5 cm] of distance between the pulley centers.
   d. The belts must not touch the bottom of the pulley grooves. The belts must not protrude more than 3/32 inch [2.38 mm] above the outside diameter of the pulley.
   e. When identical belts are installed on a pulley, the protrusion of the belts must not vary more than 1/16 inch [1.59 mm].
   f. Make sure that the belts do not touch or hit against any part of the engine.
2. To adjust the belts.
   a. Use the Part No. ST-1274 Belt Tension Gauge to check the tension of belts that are from 3/8 to 1/2 inch [9.53 to 12.70 mm] wide. Use the ST-1138 gauge to check belts that are from 11/16 to 7/8 inch [17.46 to 22.23 mm] wide. Use the ST-1293 gauge to check the "Poly-V" belts.
   b. Tighten the 3/8 to 1/2 inch [9.53 to 12.70 mm] wide belts until a reading of 120 to 140 lbs. is indicated on the gauge. Tighten the 11/16 to 7/8 inch [17.46 to 22.23 mm] wide belts until a reading of 90 to 110 lbs. is indicated on the gauge. Tighten the "Poly-V" belt until a reading of 140 to 160 lbs. is indicated on the gauge.
   c. After the engine has been running for at least 1 hour, stop the engine and check the belt tension. If the tension is less than the value given in Step b, adjust the belt to the correct value.

Install the Engine Brake

Install the engine brake or Jacobs Brake if the engine is so equipped. Follow the instructions given in Group 20.

Adjust the Valves and Injectors

The valves and injectors must always be in the correct adjustment for the engine to operate efficiently.

The adjustment value for the injectors is determined by which type of rocker lever housings are used on the engine. See Table 14 to find the correct value for the aluminum and the cast iron rocker housings.

Note: When you adjust the valves and injectors for a left hand rotation engine, make sure that you use the correct sequence shown in Table 12.

The Dial Indicator Method to Adjust the Injectors

Caution: Do not use this method to adjust the top-stop injectors.

1. Rotate the crankshaft in the direction of engine rotation. Align the "A" or "1-6 VS" mark

Digitized by Google

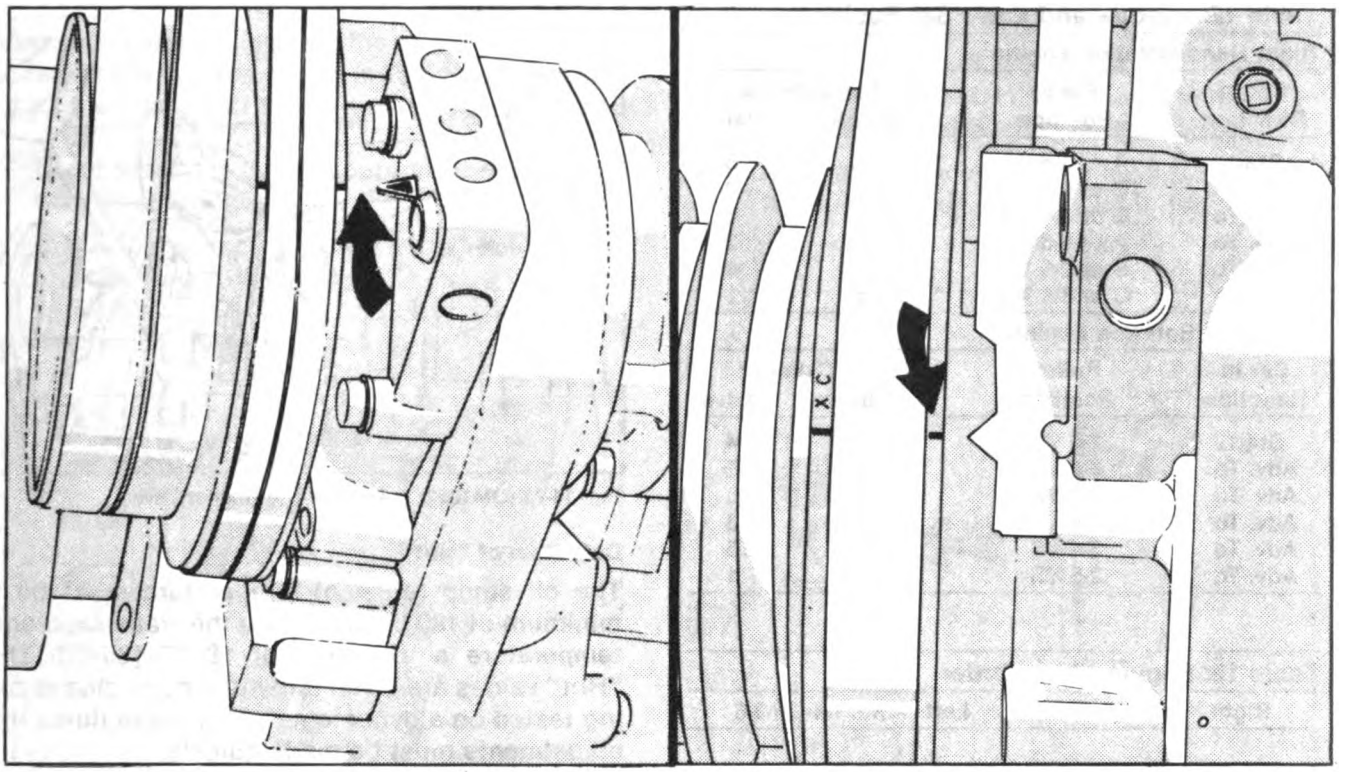

Fig. 14-70 (OM1050L). Align The Timing Marks With Pointer On The Gear Cover.

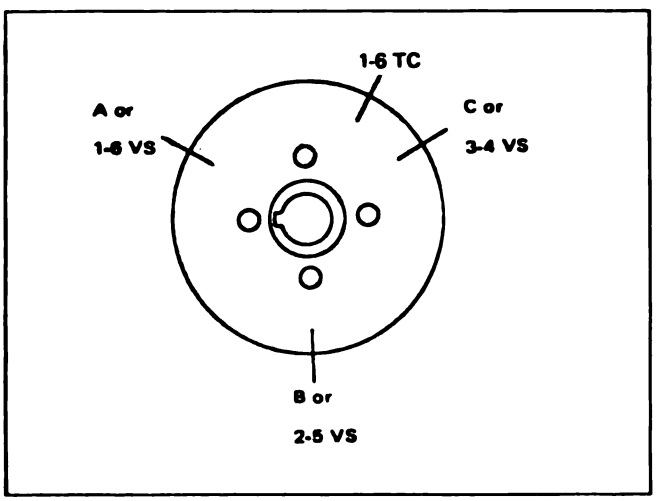

Fig. 14-71 (N114230). The Timing Marks On The Accessory Drive Pulley.

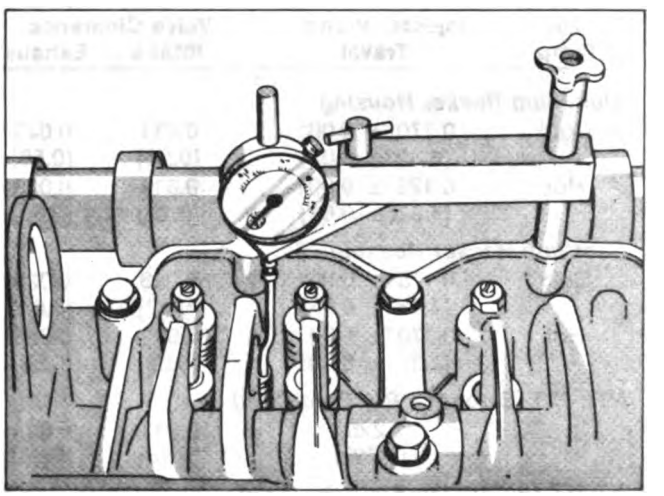

Fig. 14-72 (OM1051L). Check The Travel Of The Injector Plunger.

on the accessory drive pulley with the pointer on the gear cover, Fig. 14-70 and Fig. 14-71.

2. When the "A" or "1-6 VS" mark is aligned with the pointer, the intake and exhaust valves for cylinder number 5 must be in the closed position. The injector plunger for cylinder number 3 must be at the top of its travel. When the valves are closed, the rocker levers for cylinder number 5 will be loose. If they are not, rotate the crankshaft 360 degrees and align the marks on the pulley with the pointer.

Note: The instructions using cylinder No. 3 to begin the injector adjustments are for illustration purposes. You can begin the adjustments with any of the cylinders as shown in Table 12.

Digitized by Google

Table 12: Injector and Valve Set Position

Right Hand Rotation Engine

Bar in Direction	Pulley Position	Set Cylinder Injector	Set Cylinder Valve
Start	A or 1-6 VS	3	5
Adv. To	B or 2-5 VS	6	3
Adv. To	C or 3-4 VS	2	6
Adv. To	A or 1-6 VS	4	2
Adv. To	B or 2-5 VS	1	4
Adv. To	C or 3-4 VS	5	1

Left Hand Rotation Engine

Bar in Direction	Pulley Position	Set Cylinder Injector	Set Cylinder Valve
Start	1-6 VS	2	4
Adv. To	3-4 VS	6	2
Adv. To	2-5 VS	3	6
Adv. To	1-6 VS	5	3
Adv. To	3-4 VS	1	5
Adv. To	2-5 VS	4	1

Table 13: Engine Firing Order

Right Hand: 1-5-3-6-2-4 Left Hand: 1-4-2-6-3-5

Table 14: Adjustment Limits Using Dial Indicator Method — Inch [mm]

Oil Temp.	Injector Plunger Travel	Valve Clearance Intake	Valve Clearance Exhaust
Aluminum Rocker Housing			
Cold	0.170 ± 0.001 [4.32 ± 0.03]	0.011 [0.28]	0.023 [0.58]
Hot	0.170 ± 0.001 [4.32 ± 0.03]	0.011 [0.28]	0.023 [0.58]
Cast Iron Rocker Housing			
Cold	0.175 ± 0.001 [4.45 ± 0.03]	0.013 [0.33]	0.025 [0.64]
Hot	0.170 ± 0.001 [4.32 ± 0.03]	0.011 [0.28]	0.023 [0.58]
NTE-855 (European Big Cam Only)			
	0.225 [5.72]	0.011 [0.28]	0.023 [0.58]
NT-855 (Australian Big Cam Only)			
	0.228 [5.79]	0.011 [0.28]	0.023 [0.58]

Note: Always check the engine dataplate for the injector and valve adjustment values.

Definition of "Cold"

The engine must be at any stabilized water temperature of 140°F [60°C] or below.

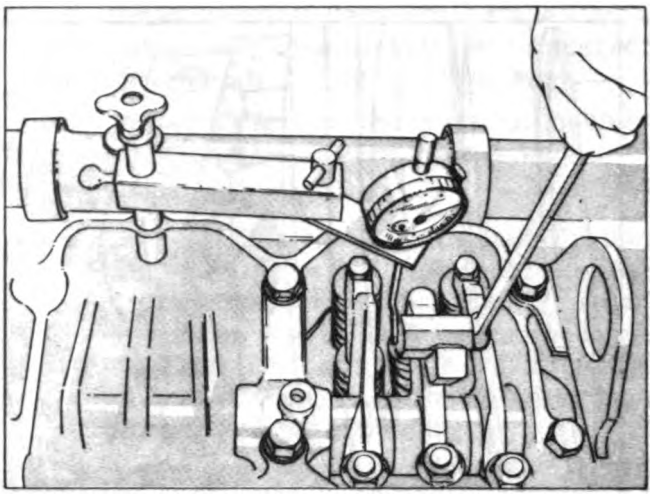

Fig. 14-73 (OM1052L). Actuate The Rocker Lever.

Definition of "Hot"

The oil sump (oil pan) temperature must be a minimum of 190°F [88°C] and the water (coolant) temperature a minimum of 185°F [85°C]. The "Hot" values are given for when the engine is being tested on a dynomometer. At these times the adjustments must be made quickly.

3. Use the Part No. 3375842 Injector Adjustment Kit to check the travel of the injector plunger. Install the dial indicator and support so that the extension for the dial indicator is against the injector plunger, Fig. 14-72. Make sure that the extension is correctly installed into the indicator stem and that it does not touch the rocker lever.
4. Actuate the rocker lever to push the injector plunger to the bottom of its travel. Use the ST-1193 Rocker Lever Actuator from the 3375842 Adjustment Kit to actuate the rocker lever, Fig. 14-73. Let the plunger rise to the top of its travel. Actuate the lever again and set the indicator at zero as you hold the plunger at the bottom of its travel.
5. Tighten the rocker lever adjusting screw until the injector plunger has the correct travel as shown in Table 14.
6. Hold the adjusting screw in position and tighten the locknut to 40 to 45 ft.-lbs. [54 to 61 N•m] torque. Actuate the rocker lever two or three times to make sure that the adjustment is correct. When you use the ST-669 Adapter to tighten the locknut, tighten the locknut to 30 to 35 ft.-lbs. [41 to 47 N•m] torque.

Digitized by Google

Adjust the Valves

After you adjust the injector, the valves must be adjusted for the cylinder shown in Table 12 **before** you rotate the crankshaft to the next adjustment mark.

1. Make sure that the locknuts for the adjusting screws are loose.
2. Put a feeler gauge between the rocker lever and the contact surface of the crosshead, Fig. 14-74. See Table 14 to find the correct thickness of the feeler gauge.

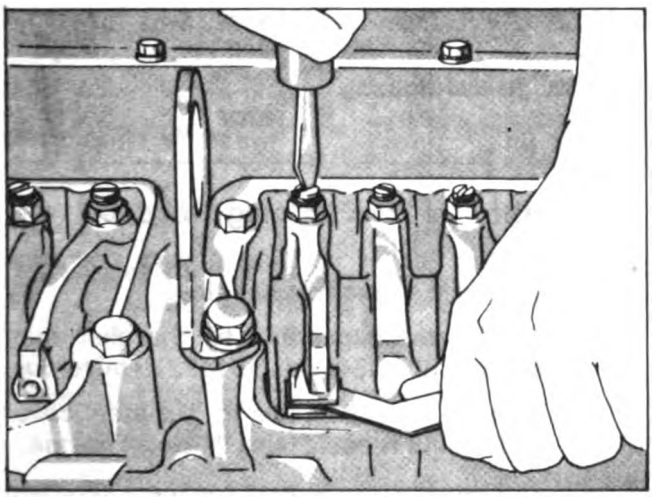

Fig. 14-74 (OM1055L). Adjust The Valves.

3. Tighten the adjusting screw until the rocker lever touches the feeler gauge. Hold the adjusting screw in position and tighten the locknut to 40 to 45 ft.-lbs. [54 to 61 N•m] torque. When you use the ST-669 Adapter, tighten the locknut to 35 to 40 ft.-lbs. [47 to 54 N•m] torque.
4. Repeat the procedure to adjust all of the remaining valves.

To Adjust the Top-Stop Injectors

Note: To adjust the injectors for engines with MVT, the MVT actuator must be in the fully retarded position.

Caution: The top-stop injector plunger travel can only be adjusted when the injectors are removed from the engine. Use the Part No. 3379160 Adjusting Tool to adjust the plunger travel.

1. Rotate the crankshaft in the direction of engine rotation and align the "VS" mark on the accessory drive pulley with the pointer on the gear cover.
2. Loosen the locknut for the rocker lever adjusting screw. Tighten the adjusting screw until all of the clearance is removed from between the rocker lever and injector link. Then tighter the adjusting screw one additional turn.
3. Loosen adjusting screw until the spring washer is against the stop of the injector, Fig. 14-75.

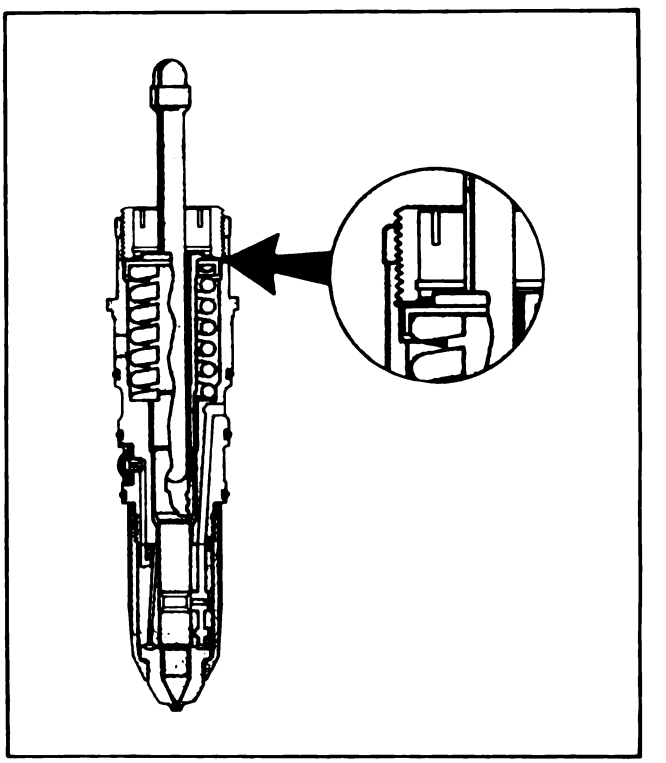

Fig. 14-75. Top-Stop Injector — The Washer Against The Stop.

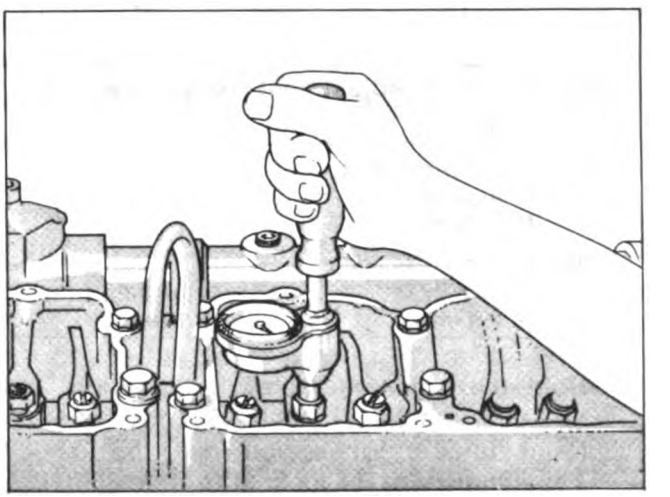

Fig. 14-76. Tighten The Adjusting Screw.

Digitized by Google

4. Tighten the adjusting screw to 5 to 6 in.-lbs. [0.56 to 0.68 N•m] torque. Use the Part No. 3375232 Torque Wrench to tighten the screw, Fig. 14-76. If you do not have a torque wrench, tighten the screw until there is light pressure against the injector link. The link must be free enough that you can rotate it with your hand.
5. Hold the adjusting screw in position and tighten the locknut to 40 to 45 ft.-lbs. [54 to 61 N•m] torque. When you use the ST-669 Adapter tighten the locknut to 30 to 35 ft.-lbs. [41 to 47 N•m] torque.

The Torque Method to Adjust the Injectors

1. Rotate the crankshaft in the direction of engine rotation. Align the mark on the pulley with the pointer on the gear cover. Check both cylinders indicated on the pulley (Fig. 14-71) to see which valve rocker levers are loose. Adjust the injector of the cylinder in which the rocker levers are loose.
2. Loosen the adjusting screw locknut. Tighten the adjusting screw until the injector plunger is at the bottom of its travel. Tighten the adjusting screw an additional 15 degrees to remove all of the oil from the injector cup. Loosen the adjusting screw one full turn.
3. Use a torque wrench that is calibrated in inch-lbs. to adjust the injectors. The torque wrench must have a screwdriver adapter. Tighten the adjusting screw to the correct torque value shown in Table 15. Loosen the adjusting screw and adjust it to the torque value two or three times to make sure that it is correctly adjusted.

Table 15: Injector Adjustment (Torque Method)

Cold Set	Hot Set
Cast Iron Rocker Housing	
48 inch-lb. [5.4 N•m]	72 inch-lb. [8.1 N•m]
Aluminum Rocker Housing	
72 inch-lb. [8.1 N•m]	72 inch-lb. [8.1 N•m]

4. Hold the adjusting screw in position and tighten the locknut to 40 to 45 ft.-lbs. [54 to 61 N•m] torque. When you use the ST-669 Adapter, tighten the locknut to 30 to 35 ft.-lbs. [41 to 47 N•m] torque.

Valve Adjustment

When using the Torque Method, the valves and injector are adjusted on the same cylinder before rotating the crankshaft for the next cylinder. See Table 16 to find the correct valve clearance. Tighten the locknuts to 40 to 45 ft.-lbs. [54 to 61 N•m] torque.

Table 16: Valve Clearance (Torque Method) — Inch [mm]

Intake Valves		Exhaust Valves	
Cold Set	Hot Set	Cold Set	Hot Set
Aluminum Rocker Housing			
0.014 [0.36]	0.014 [0.36]	0.027 [0.69]	0.027 [0.69]
Cast Iron Rocker Housing			
0.016 [0.41]	0.014 [0.36]	0.029 [0.74]	0.027 [0.69]

Install the Rocker Housing Covers

1. Install the rocker housing covers and new gaskets onto the rocker housing.
   a. Tighten the capscrews for the aluminum cover to 12 to 17 ft.-lbs. [16 to 23 N•m] torque.
   b. Tighten the capscrews for the steel cover to 10 to 15 ft.-lbs. [14 to 21 N•m] torque.
   c. Tighten the capscrews for the aluminum cover that uses gaskets made of cork and rubber to 75 to 95 in.-lbs. [8.5 to 10 N•m] torque.

Note: Refer to the parts catalog to find the correct gasket to use.

Install the Intake Manifold or Aftercooler

1. Put new manifold gaskets onto the intake ports of the cylinder heads. Use a small amount of Lubriplate to hold the gasket against the cylinder head.
2. Follow these instructions to install the intake manifold.
   a. Install a capscrew and washer assembly into the bottom capscrew hole of each intake port on the cylinder head. Tighten the capscrews 3 to 5 turns.
   b. Install the manifold with slots onto the capscrews and washers. Make sure that the washers are not between the cylinder head and manifold.

Digitized by Google

c. Install the remaining capscrews and washers into the manifold and cylinder heads. Tighten the capscrews to 20 to 25 ft.-lbs. [27 to 34 N•m] torque.

3. Follow these instructions to install the aftercooler.
   a. Install a guide pin into a capscrew hole in the intake port of each cylinder head.
   b. Install the aftercooler onto the guide pins.
   c. Install the capscrews and washers. Remove the guide pins and install the remaining capscrews and washers. Tighten the capscrews to 20 to 25 ft.-lbs. [27 to 34 N•m] torque.
4. Install the air inlet connection and a new gasket onto the intake manifold. Tighten the capscrews to 20 to 25 ft.-lbs. [27 to 34 N•m] torque.
5. Install the front and the rear water crossover tubes to the aftercooler. Make sure that the hoses for the water crossover tubes are not damaged. Tighten the hose clamps to 35 to 45 in.-lbs. [4 to 5 N•m] torque.

Install the Aneroid Control

1. Install the aneroid control and bracket assembly, if the engine is so equipped, to the fuel pump side of the engine. Tighten the capscrews to 25 to 30 ft.-lbs. [34 to 40.6 N•m] torque.
2. Install the fuel pressure line, from the bottom of the fuel pump, to the connection on the aneroid that is marked "IN". Install the fuel return line from the fuel inlet connection on the aneroid that is marked "OUT".
3. Install the air line to the top of the aneroid and to the intake manifold.
4. Tighten the 1/4 inch tube nuts to 10 to 15 ft.-lbs. [13.5 to 20 N•m] torque. Tighten the 5/16 inch tube nuts to 15 to 20 ft.-lbs. [20 to 27 N•m] torque.

Install the Fuel Filter

The Filter Cartridge

Note: All construction engines and engines that have a rating of above 350 horsepower must be equipped with dual fuel filters. Install the filter cartridges to a dual cartridge filter head.

1. Install the mounting bracket for the filter. Install the bracket to the same location on the engine as when it was removed. Tighten the capscrews to 25 to 30 ft.-lbs. [34 to 40.6 N•m] torque.
2. Install the filter head on to the bracket. Tighten the capscrews to 15 to 20 ft.-lbs. [20 to 27 N•m] torque.
3. Apply a light coat of lubricating oil to a new cartridge seal and to the gasket of a new cartridge. Install the seal and cartridge onto the filter head. Use your hand to tighten the cartridge. Tighten the cartridge until the gasket is against the filter head and then tighten the cartridge an additional one-half turn.
4. Install the fuel line from the fuel pump to the filter head. Install the line to the connection that is marked "OUT".

The Filter Element

1. Install the mounting bracket and filter head to the engine. Install the bracket to the same location on the engine as when it was removed.
2. Check the connections in the filter head for leaks. Make sure that the connections are tightened to 30 to 40 ft.-lbs. [41 to 54 N•m] torque.
3. Install a new gasket to the filter head. Install a new element into the filter shell. Install the element and shell assembly onto the filter head. Tighten the center bolt to 20 to 25 ft.-lbs. [27 to 34 N•m] torque.
4. Install the fuel line from the fuel pump to the filter head. Install the line to the connection that is marked "OUT".

Remove the Engine from the Stand

1. Install the lifting fixture to the engine.
2. Remove the capscrews that hold the engine to the stand.

Caution: Make sure that the lifting fixture is correctly installed to the engine.

3. Install the front and rear supports onto the engine. Lower the engine until it is supported by the front and rear supports.
4. Remove the lifting fixture.
5. Remove the engine stand support plates. Install the cover plates and new gaskets to the water header.

Install the Exhaust Manifold

1. Install new exhaust manifold gaskets onto the

Digitized by Google

cylinder heads. The side of the gaskets marked "OUT" must be away from the cylinder heads. Apply a small amount of "Man-Gil No. 1865" paste or an equivalent to the gaskets to hold them in position on the cylinder heads.

2. Assemble the sections of the exhaust manifold and install them onto the engine. Install new lockplates, if the engine is so equipped, onto the capscrews. Apply a coat of anti-seize compound onto the threads of the capscrews. Start all of the capscrews two to three turns. Install the special capscrews for the heat shield, if the engine is so equipped.
3. Tighten the capscrews evenly to 15 to 20 ft.-lbs. [20.3 to 27 N•m] torque. If the engine uses bar clamps to hold the manifold, make sure that the clamps are parallel to the mounting surface of the cylinder heads when tightened. Tighten the capscrews again to 40 to 45 ft.-lbs. [54 to 61 N•m] torque.
4. Bend the tabs of the lockplates until they are against the heads of the capscrews.

Install the Piston Cooling Nozzles

1. Apply vegetable oil to new O-rings for the piston cooling nozzles. Install the O-rings into the groove of the nozzle. Use the Part No. ST-835 O-ring Assembly Tool to install the O-ring. Make sure that the O-ring is not twisted in the groove.

Note: Do not soak the O-rings in oil.

2. Install the nozzles into the cylinder block, Fig. 14-77. Tighten the slotted head screw to 60 to 96 in.-lbs. [7 to 11 N•m] torque. Tighten the hex head screw to 100 to 140 in. lbs. [11 to 15.8 N•m] torque, Fig. 14-78.

Install the Oil Cooler

1. Install guide pins into the cylinder block to help you to install the cooler assembly.
2. Install a new oil cooler support gasket over the guide pins.
3. Install the oil cooler assembly onto the cylinder block, Fig. 14-79.
4. Install the capscrews and lockwashers. Remove the guide pins. Tighten the capscrews to 30 to 35 ft.-lbs. [40.6 to 47.4 N•m] torque.
5. Install the support bracket, if the engine is so equipped, onto the rear of the cooler and onto

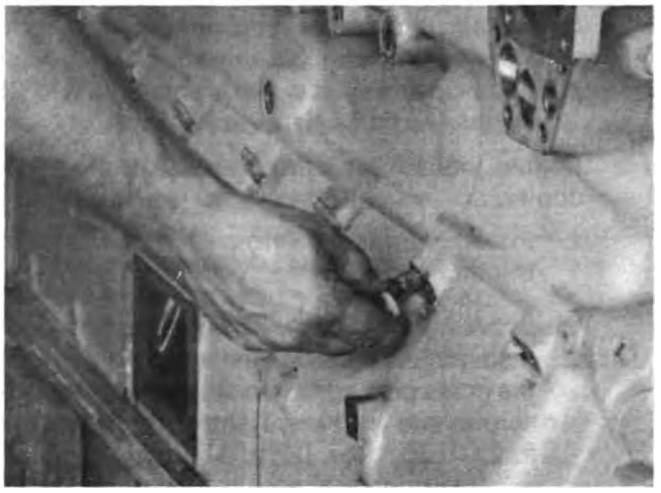

Fig. 14-77. Install The Piston Cooling Nozzles.

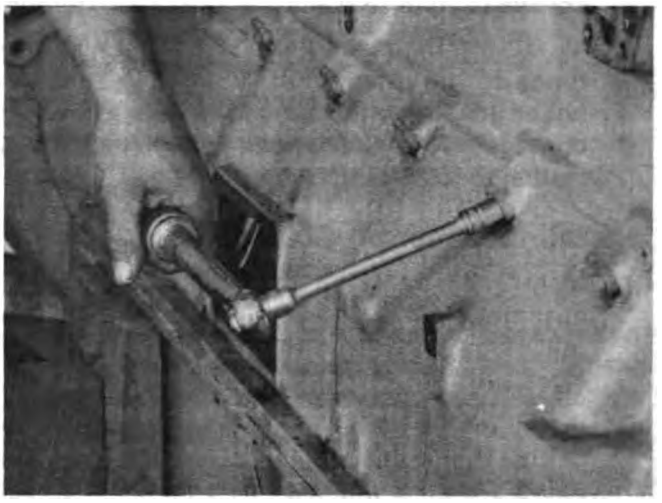

Fig. 14-78. Tighten The Screw For The Piston Cooling Nozzle.

Fig. 14-79. Install The Oil Cooler Assembly.

Digitized by Google

the cylinder block. Tighten the capscrews for the bracket to the following values:

a. 3/8 inch capscrews — 30 to 35 ft.-lbs. [40.6 to 47.4 N•m] torque.

b. 7/16 inch capscrews — 50 to 55 ft.-lbs. [68 to 74.5 N•m] torque.

c. 1/2 inch capscrews — 75 to 85 ft.-lbs. [101.7 to 115 N•m] torque.

6. Install the water transfer tube into the rear of the cooler housing and onto the connection on the rear water header cover. Tighten the hose clamps to 35 to 45 in.-lbs. [4 to 5 N•m] torque.

7. Install new O-rings onto the water transfer tube. Install the tube into the thermostat housing and the oil cooler. Tighten the retaining capscrew to 30 to 35 ft.-lbs. [40.6 to 47.4 N•m] torque, Fig. 14-80.

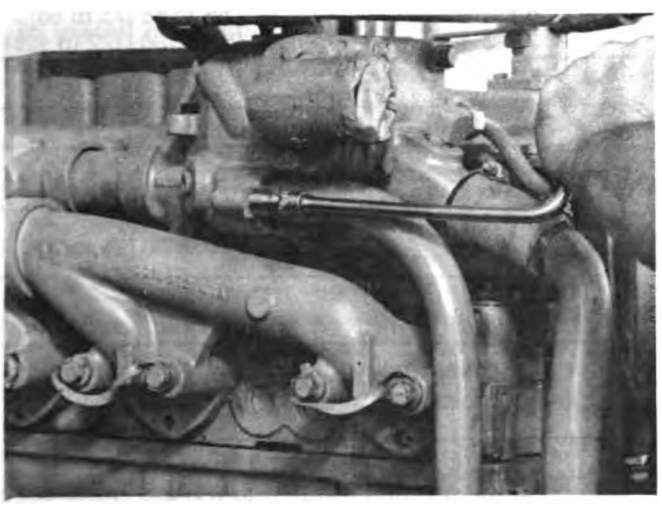

Fig. 14-80. Install The Water Transfer Tube.

8. Apply a coat of clean oil to the sealing gasket of the oil filter element. Install the oil filter.

a. Use the installation instructions that are printed on the spin-on filter cartridge in order to install it.

b. Install the element and filter shell assembly onto the filter head. Tighten the center bolt to 25 to 35 ft.-lbs. [34 to 47.4 N•m] torque.

Note: Make sure that there is a minimum of 0.250 inch [6.3 mm] clearance between the filter and the oil pan flange of the cylinder block.

Install the Water Inlet Connection

Install a new gasket and the water inlet connection onto the water pump. Tighten the capscrews to 30 to 35 ft.-lbs. [40.6 to 47.4 N•m] torque.

Install the Air Compressor Water Lines

1. Install the water inlet and outlet lines to the air compressor, the cylinder block and the water bypass connection.

2. Tighten the tube nuts to the following values:

a. 1/2 inch — 10 to 15 ft.-lbs. [14 to 20 N•m] torque.

b. 7/8 inch — 15 to 20 ft.-lbs. [20 to 27 N•m] torque.

c. 1-1/4 inch — 20 to 25 ft.-lbs. [27 to 34 N•m] torque.

Install the Alternator or Generator

1. Follow those instructions to install the alternator/generator that uses the spool type of mounting bracket.

a. Install the mounting bracket onto the cylinder block. Do not tighten the capscrews at this time.

b. Align the alternator/generator mounting holes with the mounting holes of the bracket. Put the hardened washers or spacers between the mounting lugs of the alternator/generator and the mounting bracket. Install the bolt onto the mounting holes in the alternator/generator and the mounting bracket. Do not tighten the bolt at this time.

c. Install the adjusting link onto the cylinder block.

d. Install the belt(s) onto the alternator/generator pulley and the pulley on the engine. Check the alignment of the pulleys. The pulleys must be aligned within 0.062 inch [1.57 mm] for each 12.0 inches [305 mm] of distance between the centers of the pulleys. Move the mounting bracket until the alignment is correct. Then tighten the capscrews for the mounting bracket.

e. Adjust the belt(s) to the correct tension. Use a pry bar to push the alternator/generator away from the cylinder block to

Digitized by Google

tighten the belt(s). Tighten the capscrews for the adjusting link. See Table 17 to find the correct torque value.

f. Tighten the alternator/generator mounting bolt. See Table 18 to find the correct torque value.

2. Follow these instructions to install the alternator/generator that uses a two-lug type of mounting bracket:

   a. Install the mounting bracket onto the cylinder block. Do not tighten the capscrews at this time.

   b. Align the mounting holes as described in Step 1b. Install the mounting bolts so that the nuts for the bolts are toward each other.

   c. Follow the procedures in Steps 1c, 1d and 1e to install the adjusting link, to check the alignment and to tighten the belt(s).

   d. Tighten the alternator/generator mounting bolts. Tighten the bolt nearest to the pulley first. Then use a hammer to hit the head of the bolt in the opposite end of the alternator/generator. Hit the bolt until the bushing that is in the mounting hole of the alternator/generator is against the mounting bracket. Tighten the bolt. See Table 18 to find the correct torque value.

3. Follow the same instructions to install the alternator/generator that uses the fabricated steel mounting bracket.

4. When you install a pulley onto the alternator/generator, always use the locknut and hardened washer that are supplied with the alternator/generator. Tighten the locknut to the torque value given in Table 19.

Install the Breather Tube

1. Install the breather tube, if the engine is so equipped, onto the crankcase breather. Be sure to install a new O-ring for the breather tube.

2. Use a tube clamp to fasten the tube to the cylinder block.

Install the Starting Motor

If a new starting motor is to be installed, make sure that it is the same type of starting motor that was removed.

Table 17: Torque Values (To Adjusting Link)

Nominal Bolt Size inch	Torque Ft.-Lb. [N•m]
5/16	15 to 19 [20 to 26]
7/16	25 to 30 [34 to 41]
1/2	50 to 55 [68 to 75]

Table 18: Torque Values (To Bracket)

Nominal Bolt Size inch	Torque Ft.-Lb. [N•m]
3/8	29 to 31 [39 to 42]
7/16	63 to 65 [85 to 88]
1/2	77 to 80 [104 to 108]

Table 19: Torque Values (Pulley to Alternator or Generator)

Nominal Bolt Size inch	Torque Ft.-Lb. [N•m]
1/2	50 to 60 [68 to 81]
5/8	55 to 65 [75 to 88]
3/4	90 to 100 [122 to 126]

Note: Exceptions to the above limits are:

Delco-Remy Alternators	Torque Ft.-Lb. [N•m]
10 DN 150 25 SI	70 to 80 [95 to 108]
CAV Alternators	
AC 5	40 to 42 [54 to 57]
AC 7	60 to 70 [81 to 95]
AC 90	60 to 70 [81 to 95]

1. Install the starting motor and if used, the spacer onto the mounting pad of the flywheel housing. Make sure that the starting motor drive gear will engage with the flywheel ring gear when the starting motor is activated.

Note: When the engine is equipped with a wet clutch, use a new gasket and nylok capscrews to install the starting motor.

2. Tighten the capscrews to 150 to 170 ft.-lbs. [203 to 230 N•m] torque.

Install the Oil Gauge Bracket

Install the oil gauge bracket and new gasket to the cylinder block. Tighten the capscrews to 30 to 35 ft.-lbs. [40.6 to 47.4 N•m] torque.

Digitized by Google

Install the Water Filter

1. Install the bracket and filter head onto the cylinder block. Install the bracket and filter head at the same location on the engine as when it was removed. Tighten the capscrews to 30 to 35 ft.-lbs. [40.6 to 47.4 N•m] torque.
2. Install the valves and hoses to the filter head.
3. Apply a light coat of oil to the sealing gasket of a new filter cartridge.
4. Install the new filter cartridge onto the filter head. Tighten the cartridge until the sealing gasket touches the filter head. Then, tighten the cartridge an additional one-half to three-fourth turn.

Caution: Do not use a wrench to tighten the cartridge. Over-tightening can damage the threads and the seal.

Install the Turbocharger

To Install the Single Turbocharger

1. Apply a coat of anti-sieze compound to the threads of the turbocharger mounting studs.
2. Install a new turbocharger gasket onto the exhaust manifold. The raised bead on the gasket must be toward the turbocharger.
3. Install the turbocharger onto the exhaust manifold. Tighten the mounting nuts to 20 to 25 ft.-lbs. [27 to 34 N•m] torque, Fig. 14-81.
4. Install the oil drain tube or hose onto the connection in the bottom of the bearing housing.
   a. Align the tube with the connection in the bearing housing and the connection in the cylinder block.
   b. Tighten the tube nut to 50 to 60 ft.-lbs. [68 to 81 N•m] torque.
   c. Tighten the hose clamps to 35 to 45 in.-lbs. [4 to 5 N•m] torque.
   d. If the drain tube uses a "Flex" type of tube nut, tighten the nut until it is against the stop.
   e. Tighten the hose swivel nut to 50 to 60 ft.-lbs. [68 to 81 N•m] torque.

Note: The centerline of the oil drain hole must be within 30 degrees of vertical when the turbocharger is installed onto the engine. If you loosen the Vee clamps of the housing to align the oil drain hole, tighten the clamp nuts to 32 to 36 in.-lbs. [3.6 to 4.1 N•m] torque. Then, use a plastic hammer to lightly hit around the circumference of the clamps. Tighten the clamp nuts again to 32 to 36 in.-lbs. [3.6 to 4.1 N•m] torque.

5. Install the oil supply hose to the connections in the top of the turbocharger and on the oil cooler. Tighten the swivel nuts to 19 to 26 ft.-lbs. [25.7 to 35 N•m] torque.
6. Install the air intake crossover onto the turbocharger and the air intake manifold or the aftercooler, Fig. 14-82. Use a new rubber tubing connection and new gasket. Tighten the capscrews into the air intake manifold or after-

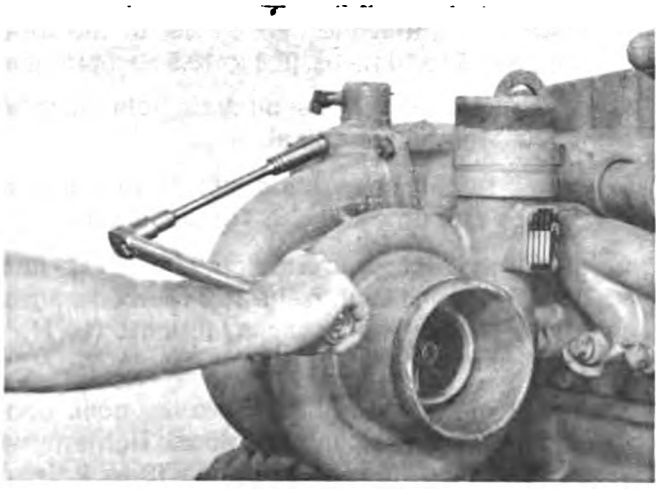

Fig. 14-81. Install The Turbocharger Onto The Exhaust Manifold.

Fig. 14-82. Install The Air Intake Crossover.

Digitized by Google

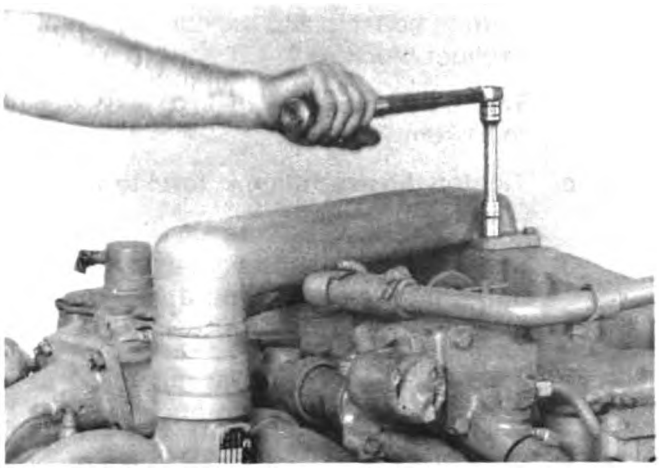

Fig. 14-83 . Tighten The Capscrews For The Crossover.

cooler to 20 to 25 ft.-lbs. [27 to 34 N•m] torque, Fig. 14-83. Tighten the nuts for the clamps to 65 to 75 in.-lbs. [7.4 to 8.5 N•m] torque.

To Install the Series Turbochargers

The High Pressure (H.P.) turbocharger installs onto the exhaust manifold. The Low Pressure (L.P.) turbocharger installs onto the exhaust inlet connection. Follow these instructions to install the turbocharger.

Install the H.P. Turbocharger

1. Apply a coat of anti-sieze compound onto the threads of the mounting studs that are in the exhaust manifold.
2. Install a new gasket (9, Fig. 14-84) for the H.P. Turbocharger (10) onto the exhaust manifold. The raised bead on the gasket must be toward the turbocharger.
3. Install the H.P. Turbocharger (10) onto the exhaust manifold. Tighten the nuts to 5 to 10 ft.-lbs. [6.8 to 13.5 N•m] torque.
4. Install the supports (3) onto the exhaust manifold. Tighten the nuts to 5 to 10 ft.-lbs. [6.8 to 13.5 N•m] torque.
5. Install the oil drain tube onto the turbocharger. Tighten the capscrews for the tube flange to 5 to 10 ft.-lbs. [6.8 to 13.5 N•m] torque.
6. Install a new gasket (8) and the exhaust outlet connection (4) onto the turbocharger. Install the gasket so that the bead is toward the turbocharger.
7. Install the adapter (6), clamp (5) and inlet connection (7) onto the outlet connection (4). Align the connection (7) with the supports (3) and install the capscrews, washers and nuts to fasten the connection onto the supports.
8. Align and tighten the parts in the following sequence.
   a. Tighten the clamp for the exhaust connection to 70 to 80 in.-lbs. [8 to 9 N•m] torque.
   b. Tighten the mounting nuts for the turbocharger to 30 to 35 ft.-lbs. [40.6 to 47.4 N•m] torque.
   c. Tighten the mounting nuts that fasten the exhaust connection to the turbocharger to 30 to 35 ft.-lbs. [40.6 to 47.4 N•m] torque.
   d. Tighten the capscrews that fasten the supports to the exhaust manifold to 50 to 60 ft.-lbs. [68 to 81 N•m] torque.
   e. Tighten the capscrews and nuts that fasten the inlet connection to the supports to 30 to 35 ft.-lbs. [40.6 to 47.4 N•m] torque.

Note: The centerline of the oil drain hole must be within 30 degrees of vertical when the turbocharger is installed onto the engine.

Install the L.P. Turbocharger

1. Install the L.P. Turbocharger (1, Fig. 14-84) and a new gasket (2) onto the exhaust connection (7). The bead on the gasket must be toward the turbocharger. Tighten the capscrews and nuts to 5 to 10 ft.-lbs. [6.8 to 13.5 N•m] torque.
2. Install the oil drain tube onto the turbocharger. Tighten the capscrews for the tube flange to 5 to 10 ft.-lbs. [6.8 to 13.5 N•m] torque.

Note: The centerline of the oil drain hole must be within 30 degrees of vertical.

3. Install the air connection (16), hose (14) and clamps (15) onto the L.P. Turbocharger (10).
4. Install the air crossover, air inlet pipe (12) and new O-rings (11) onto the H.P. Turbocharger. Install the retaining braces (13) onto the H.P. Turbocharger.
5. Install the oil drain tubes into the hose connections on the cylinder block. Tighten the hose clamps to 30 to 35 in.-lbs. [3 to 4 N•m] torque.

Digitized by Google

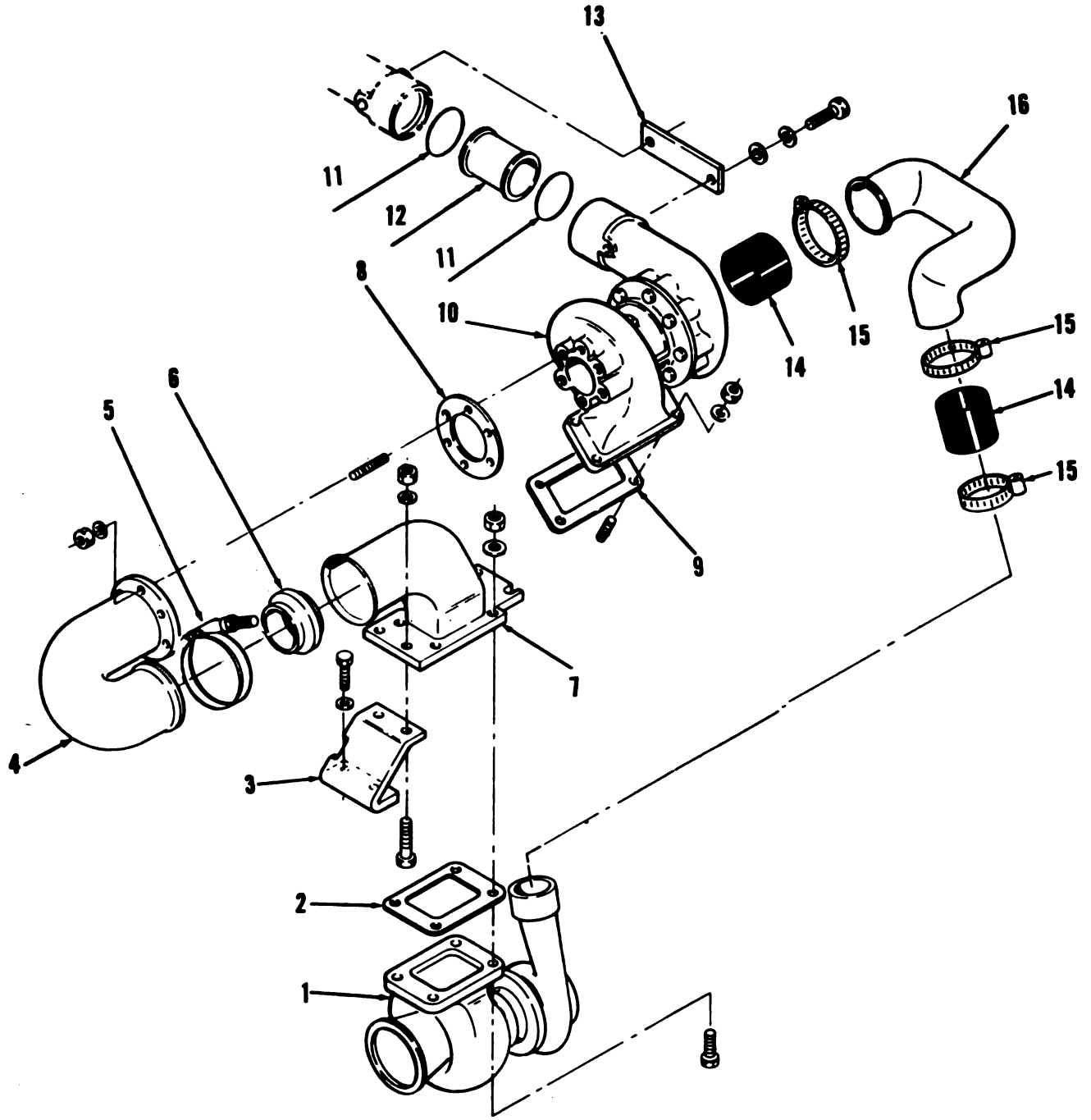

1. Low Pressure Turbocharger
2. Gasket
3. Support
4. Exhaust Outlet Connection
5. Clamp
6. Exhaust Outlet Adapter
7. Exhaust Inlet Connection
8. Gasket
9. Gasket
10. High Pressure Turbocharger
11. O-Ring
12. Air Inlet Pipe
13. Brace
14. Hose
15. Clamp
16. Air Connection

Fig. 14-84. Series Turbochargers — Exploded View

Digitized by Google

6. Align and tighten the parts. Use the following torque values.
   a. Tighten mounting capscrews and nuts for the turbocharger to 30 to 35 ft.-lbs. [40.6 to 47.4 N•m] torque.
   b. Tighten the capscrews for the oil drain tube flange to 30 to 35 ft.-lbs. [40.6 to 47.4 N•m] torque.
   c. Tighten the clamps for the air connection to 65 to 75 in.-lbs. [7.3 to 8.5 N•m] torque.
   d. Tighten the capscrews for the retaining braces to 15 to 20 ft.-lbs. [7.3 to 8.5 N•m] torque.
7. Install the oil supply hoses onto both of the turbochargers. Tighten the swivel nuts to 19 to 26 ft.-lbs. [25.7 to 35 N•m] torque.
8. Install the clamps to hold the oil hoses as shown in Fig. 14-85. Install the hoses onto the connections in the oil cooler and filter head as shown in Fig. 14-85. Tighten the hose nuts to 5 to 10 ft.-lbs. [6.89 to 13.5 N•m] torque.

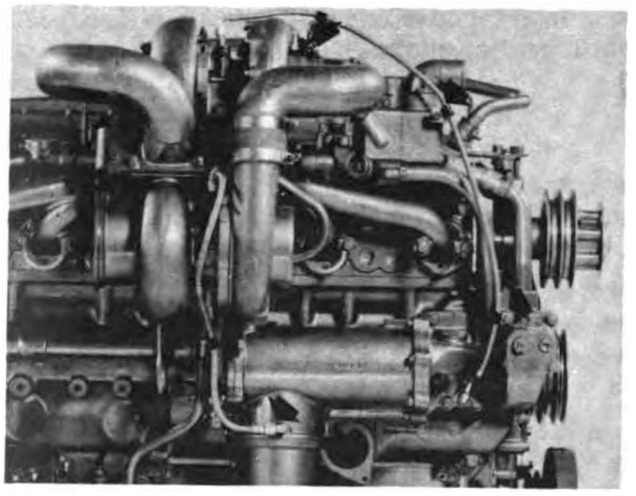

Fig. 14-85. Location Of Hose Clamps And Oil Connections.

To Test the Engine

The run-in period of the engine is completed during the testing of the engine. It is necessary to test the engine to find errors that can occur during the assembly process. Testing also lets you make final adjustments and check the performance.

Engine Dynamometer Test

Check the dynamometer capacity. Make sure the capacity is enough to permit testing at least 96 percent of the maximum engine horsepower. If the capacity is not enough, the testing procedures must be changed to prevent damage to the dynamometer.

Caution: Make sure the dynamometer can operate at engine speeds. The couplings must have the centrifugal forces balanced.

Installation

1. Use the correct lifting device to put the engine on the dynamometer test stand.
2. Install and fasten the engine to the supports.
3. Put the dynamometer drive shaft flange onto the engine flywheel. Use the correct flywheel adapter flange for the flywheel capscrew holes.
4. Check for correct alignment.
   a. If the drive coupling is direct or flexible, put an indicator holding fixture on the face of the flywheel housing. Put the pointer of the indicator on the hub of the adapter flange. Rotate the engine to get a reading. The flywheel adapter flange must be to the center of the flywheel and the flywheel housing within 0.002 inch [0.05 mm]. Move the flange hub on the flywheel as needed and tighten the capscrews. On direct coupling dynamometers, measure from the face of the flywheel housing to the outer edge of the dynamometer drive flange. When the dynamometer is turned one revolution the reading must not exceed 0.003 inch [0.08 mm].
   b. If a universal drive coupling is used, the drive flange on the flywheel must be to the center within 0.003 inch [0.08 mm]. The drive flange on the dynamometer must also be to the center within .003 inch [0.08 mm]. Measure the center of these flanges as described in "a" above. Install the engine so that the center of the engine crankshaft and the center of the dynamometer drive shaft are out of alignment by 1/4 inch [6.35 mm] to 1/2 inch [12.7 mm]. Fasten the flywheel to the drive flange.

Preparation for Starting

Before priming the fuel and the lubricating systems, remove and fill all the filters with the correct fluid.

Digitized by Google

Fill Cooling System

1. Install the drain plugs and close all draincocks.
2. Open the cooling system vents, if applied.
3. Fill the system with coolant until it flows from the vents. Close the vents and finish filling the system.

Note: For cold weather operation, see Service Bulletin No. 3379009.

Preparing the Fuel System

1. Attach the fuel return tube from the flow tank to the fuel drain connection.
2. Attach the fuel supply tube of the flow tank to the suction connection of the fuel pump.
3. Connect the electrical wiring to the starting motor if the motor is to be used for starting. If another method of starting is to be used, make the necessary connections.
4. Connect the throttle linkage and all the instruments on the control panel of the dynamometer.
5. Fill the fuel pump with fuel before starting the engine for the first time.
6. Check the fuel tanks. There must be a supply of a clean, good grade No. 2 diesel fuel in the tanks. See "Fuel Oil", Group 18, for the correct specifications.
7. Connect the exhaust piping to the engine exhaust manifold or turbocharger.
8. Connect the air intake pipe to the intake manifold or turbocharger. Use a standard air cleaner for the engine model being tested.

Preparing the Lubricating System

1. If the engine has a turbocharger, remove the oil inlet hose and lubricate the bearing with 2 ounces [33 cc] of clean engine oil. Install the oil inlet line.
2. Fill the crankcase to "L" (low) mark on the dipstick.
3. Remove the plug from the lubricating oil crossover passage as shown in Fig. 14-86.

Caution: Do not prime the engine lubricating system from the by-pass filter.

4. Connect a priming pump line from a supply of clean engine oil to the pipe plug hole.

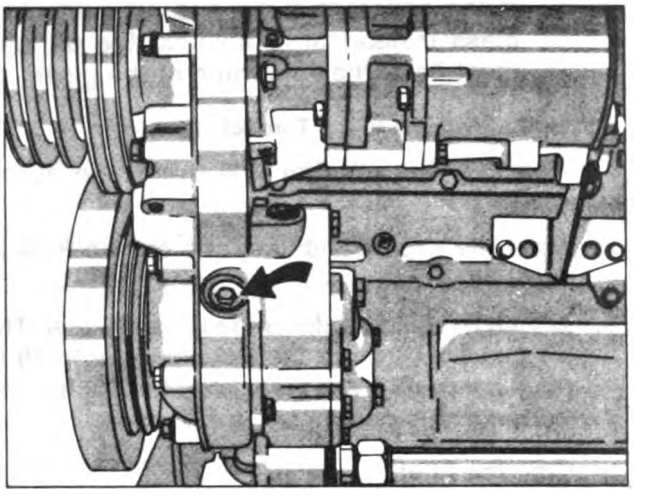

Fig. 14-86 (OM1001L). The Priming Location For The Lubricating System.

5. A 30 psi [207 kPa] minimum pressure must be reached.
6. Use the starter to rotate the crankshaft. Make sure that the fuel shut-off valve is closed to prevent starting the engine. Rotate the crankshaft for 15 seconds. Keep the oil pressure at a minimum of 15 psi [103 kPa] while you rotate the crankshaft.
7. Remove the external oil supply line. Install the pipe plug. Tighten the plug to 60 to 70 ft.-lbs. [81 to 95 N•m] torque.
8. Fill the crankcase to the "H" (high) mark on the dipstick with oil meeting the specifications listed in Group 18. The oil which is best for engine operation is also best for the run-in period. No change in the oil viscosity or type is needed for new or rebuilt engines.

Warning: Always clean off any lubricating oil which was spilled while priming or filling the crankcase.

Caution: Stop the engine after it has run for 5 minutes and check the oil level. Keep the oil level as near as possible to the "H" mark on the dipstick. Never operate the engine with the oil level below the "L" mark or above the "H" mark.

Fill the Hydraulic Governor

1. Fill the oil sump of the hydraulic governor, if the engine is so equipped, with the same type of lubricating oil that is used in the engine.
   a. Fill the sump until the oil level is at the full mark on the dipstick.

Digitized by Google

b. If the governor sump has an inspection glass instead of a dipstick, the oil level must be at the centerline of the glass.

Check the Oil Flow to the Turbocharger

1. Remove the oil drainline from the turbocharger.
2. Start the engine and keep the engine RPM at low idle.
3. Check the oil drain from the turbocharger. The oil must drain from the turbocharger in 10 to 15 seconds. If it does not, stop the engine and correct the problem.

Starting the Engine

To start the engine requires clean air and fuel supplied to the combustion chamber in proper quantities and a starting system meeting minimum Cummins recommendations.

Normal Starting Procedure

If the fuel system is equipped with an overspeed stop, push the "Reset" button before attempting to start the engine.

1. Set the throttle for idle speed.

Caution: To prevent damage to the turbocharger, do not accelerate the engine above 1000 RPM until the reading on the oil pressure gauge indicates normal oil pressure at idle speed.

2. Disengage the transmission or make sure the gears are in neutral.
3. Open the manual fuel shutoff valve on the fuel pump if the engine is so equipped. The electric shutoff valve operates as the switch is turned on.
4. Press the starter button or turn the switch-key to the "start" position.

Caution: To prevent damage to the starting motor, do not engage the starting motor continuously for more than 30 seconds. If the engine does not start within the first 30 sedonds, wait two minutes before attempting to restart.

5. A manual override knob provided on the forward end of the electric shutoff valve allows the valve to be opened in case of electric power failure. To use the override manually, open it by turning the knob completely clockwise. Return the knob to the run position after the repair has been completed.

General Test Procedures

1. Air Compressors.
   a. All Cummins-manufactured air compressors are to be operated in a pumping mode during engine run-in.
   b. Cummins single-cylinder air compressors must pump through a 0.125 to 0.130 inch [3.18 to 3.30 mm] diameter orifice located down line from a 150 psi pressure relief valve.
   c. Adjust the Cummins two-cylinder air compressors to maintain 50 to 75 psi [345 to 517 kPa] in the air tank regardless of the engine speed.
   d. Air compressors of another manufacturer can be operated in a pumping or a non-pumping mode at the option of the tester.
   e. Engine performance checks are to be made with the air compressor operating in a non-pumping mode.
2. Blow-by Measurement.
   a. If a water manometer is used to measure blow-by, you can add or remove water to raise or lower the height of the water column to the "0" position. Dye can be added to the water to make the column easier to read.
   b. Record the blow-by readings along with the respective engine speed and load at one-minute intervals during engine run-in. This will inform the tester of any unexpected increase or fluctuation in blow-by.
3. Engine Starting.
   a. To start the engine, put the throttle in the low idle position and activate the starter. After the engine starts, operate it at low idle only long enough (five to ten minutes) to check for proper oil pressure and inspect for any fuel, oil, water or air leaks.

Note: Do not allow the engine speed to exceed 1000 rpm before run-in. Do not run the engine at idle speed for prolonged periods of time before run-in.

4. Engine Run-in performance data.
   a. Refer to the Mechanics Specification Handbook to find the engine performance data. Check the engine dataplate to find

Digitized by Google

Table 20: Mechanics Specifications Handbook

Engine Build Date	Use Bulletin No.
*1976	3379116-00
1977	3379138-00
1978	3379156-00
1979	3379212-00

*For engines built prior to 1976 use Bulletin No. 3379116-00.

the year that the engine was built. See Table 20 to find the correct Mechanics Specification Handbook.

5. Leakage inspection.
   a. After each run-in step has been completed, carefully inspect the engine for fuel, oil, water, air, or exhaust leaks and correct as necessary.
6. Engine is shutoff.
   a. After the run-in has been completed, allow the engine to run at low idle for a minimum of three minutes before stopping the engine.

Note: Do not stop the engine immediately after the last run-in step is completed as serious engine damage can result.

Maintenance of Dynamometer

Follow the manufacturer's maintenance instructions to get the best service from the dynamometer.

Calibration of Instruments

1. Keep the scales properly calibrated.
2. Follow the manufacturer's recommendations when calibrating is necessary.
3. If the instruments need adjustment, follow the manufacturer's instructions.

NH/NT-855 Engine Run-in Test

Refer to "General Test Procedures" section before beginning run-in.

1. Engine dynomometer run-in schedule:

   Step 1, 1200 rpm and 25% of rated load until water temperture reaches 160°F [71°C].

   Step 2, 1200 rpm and 40% of rated load for two minutes.

   Step 3, 1600 rpm and 65% of rated load for five minutes.

   Step 4, Nominal torque peak rpm* and full load for four minutes.

   Step 5, Rated speed and full load for four minutes.

   *100 rpm below torque peak rpm.
2. Chassis dynomometer run-in schedule.
   a. Use the engine dynomometer run-in schedule, but multiply the load values by 0.8 (to compensate for lower drive line efficiency) for a readout on the chassis dynomometer load scale.
3. In-chassis run-in schedule.
   a. Operate the engine on the torque curve at less than rated speed for the first 50 to 100 miles after rebuild (e.g. pulling a loaded trailer at 1500 to 1800 rpm in high gear).

Note: Do not idle the engine for more than five minutes at any one time during the first 100 miles of operation.

4. Blow-by measurement.
   a. If the engine is naturally aspirated, plug the breather holes in the cylinder heads. Remove the plugs after the blow-by check has been completed.

Note: Do not plug the cylinder head breather holes in engines equipped with a wet flywheel housing (labyrinth type rear seal covers). If this is done, an oil leak will result.

   b. Put a plug in the crankcase breather vent. Remove the "bottle stopper" oil filler cap and replace it with the blow-by tool containing a 0.302 inch [7.67 mm] diameter orifice, Part No. 3375150. Connect the blow-by tool to the blow-by gauge.

Note: Do not attempt to contain the blow-by gases when a labyrinth type seal cover is used.

   c. Refer to the "Blow-by Measurement" section of the "General Test Procedures" for the actual measurement-recording procedure.
   d. If a sudden increase in blow-by occurs, or if blow-by exceeds the maximum allowable limit listed in (e.) during any run-in step, return to the previous step and run the engine an additional 15 minutes. When blow-

Digitized by Google

by reaches an acceptable level, proceed to the next step and continue the run-in.

Note: If blow-by does not reach an acceptable level after repeating the previous step for 15 minutes, discontinue the run-in and determine the cause of the excessive blow-by.

e. Maximum allowable blow-by during run-in:

Naturally aspirated	8 inch H_2O
Turbocharged	12 inch H_2O

Checks During the Engine Run-In Test

During the engine run-in test, make the following checks frequently:

Lubricating Oil

1. After the lubricating oil has reached normal operating temperature, the oil pessure must not change while the engine is operating at a given RPM and load. See Table 21 to find the correct oil pressure limits.
   a. If the oil pressure is above the limit, check for restrictions in the oil lines.
   b. If the oil pressure is below the limits, check for restrictions in the oil supply line to the oil pump or damaged bearings in the engine.
2. Check the temperature of the oil in the oil pan. If the oil temperature rises above 225°F [107°C], stop the engine and make the necessary corrections.

Table 21: Lubricating Oil Pressure for New or Rebuilt Engines

Engine Series	Oil Pressure At Idle Speed PSI [kPa]	Oil Pressure At Rated Speed PSI [kPa]
NH/NT and Big Cam	15 [103]	50 to 70 [345 to 483]
Big Cam II, NTE	10 [69]	35 to 45 [241 to 310]

Note: Measure the oil pressure when the temperature of the oil in the oil pan is at 200 to 225°F [93 to 107°C].

Engine Coolant

After the engine is started, add enough coolant to completely fill the cooling system. The temperature of the coolant must not exceed 200°F [93°C] or be less than 160°F [71°] during operation of the engine.

Overspeed Stop

The overspeed stop is used to shut off the fuel supply when the engine speed is approximately 15 percent in excess of the maximum rated engine speed. If the engine is equipped with an overspeed stop and the overspeed stop has become activated, correct the cause and reset the overspeed stop.

Fuel Pressure and Fuel Rate

Refer to the Fuel Pump Calibration Manuals to find the values for the fuel pressure and fuel rate and for the adjustment procedure. Check the engine dataplate to find the fuel rate and the year that the engine was built. Check the fuel pump nameplate to find the fuel pump calibration code. See Table 22 to find the correct manual. Use the Part No. ST-1190 or 3376375 Fuel Measuring Instrument to measure the rate of fuel consumption.

Table 21: Fuel Pump Calibration and Instructions Manuals

Bulletin No.	Title	Engine Model Year
3379077	PT (type G) Calibration Values	1963-1969
3379068	PT (type G) Calibration Values	1970-1975
3379182	PT (type G) Calibration Values	1976-1980
3379101	PT (type R) Rebuild and Calibration Instructions	All
3379084	PT (type G & H) Rebuild and Calibration Instructions	All

Torque Converter Governor — PT (type R) Fuel Pump

Refer to the PT (type R) Fuel Pump Manual, Bulletin No. 3379101 to find the correct procedure to adjust the engine governor and torque converter governor.

Aneroid Control Adjustment

Refer to the Fuel Pump Manual, Bulletin No. 3379068 to find the correct procedure to adjust the aneroid control.

Paint the Engine

1. Make sure all engine surfaces are clean and dry before painting them.

Digitized by Google

2. Put tape over all openings that must not be painted.
3. Put tape over all belts or remove them.
4. Protect the fuel pump dataplate, engine dataplate and other dataplates on the engine from paint.
5. Exposed threads, wire terminals and hose fittings must be protected with tape. Pipe openings, fuel pump drain, fuel manifold drain and oil cooler openings must have a cap installed.
6. Protect the clutch contact surface of the flywheel with a rust preventing compound if the engine is not going into immediate service.
7. Apply a coat of primer to the outside surfaces of the engine.
8. Apply enamel paint to the outside surfaces of the engine after the primer is dry.

Engine Storage

All surfaces of an engine will rust or corrode if they are not protected. Make sure all outside surfaces are painted before the engine is put in storage. Protect the inside of the engine during storage as described below.

Temporary Storage

If an engine remains out of service for three or four weeks (maximum six months), take steps to prevent rust. The operations listed below are required to prevent damage to engines in temporary storage.

1. The engine must be started and the speed gradually increased to 1200 rpm with no load. Operate the engine until the water temperature is at least 160°F [71°C].
2. Disconnect both fuel lines at the fuel supply tank. Fill two portable containers, one with diesel fuel and a second with preservative oil U.S. Military Specification MIL-L-644 Type P-9. Preservative oil to this specification is Daubert Chemical Co., Nox-Rust No. 518. Daubert Chemical address is 2000 Spring Road, Chicago, Illinois.
3. Start the engine with the fuel inlet line pulling fuel from the can with the diesel fuel. Let the drain line flow into the container with the diesel fuel. After the engine is started and is running at idle, move the fuel line to the container with the preservative oil. Operate the engine five to ten minutes on the preservative oil. Stop the engine and reconnect the fuel lines to the supply tank.
4. The oil sump, fuel filters and fuel tank, must be drained and the drain plugs installed. New oil can be added.
5. Remove the intake hose from between the air cleaner and the intake manifolds.
6. Disconnect the electrical wiring. Turn the shutoff valve on the fuel pump counterclockwise so that the engine will not start. Rotate the crankshaft of the engine while applying a spray of 10W oil into the intake manifold and the air compressor.
7. Put tape over all the intake manifold openings to keep out dirt and moisture.
8. Put tape over all the engine openings, including the coolant inlets, cylinder block, oil breather and crankcase.
9. Drain the coolant from the cooling system, unless it is a permanent antifreeze with a rust inhibitor added.
10. Put the engine in a place protected from the weather where the air is dry and the temperature is even.
11. Rotate the engine crankshaft two or three revolutions each three to four weeks.

Long Term Storage

1. When an engine is to be in storage for six months or more, it must be protected against rust and corrosion.
2. The engine must be started and the speed gradually increased to 1200 rpm with no load. Operate the engine until the water temperature reaches 160°F [71°C]. Stop the engine and drain the old oil.
3. Fill the crankcase to the full mark on the dipstick with preservative oil, U.S. Military Specification MIL-L-21260, Type P-10, Grade 2, SAE 30. This specification can be obtained as Shell Brand Code 676202 or Texaco Preservative Oil 30.
4. Disconnect both fuel lines at the fuel supply tank. Fill two portable containers, one with

Digitized by Google

diesel fuel and the second with preservative oil U.S. Militry Specification MIL-L-644, Type P-9. Preservative oil to this specification is Daubert Chemical Co., Nox-Rust No. 518. Daubert Chemical address is 2000 Spring Road, Chicago, Illinois.

5. Start the engine with the fuel inlet line pulling fuel from the can with the diesel fuel. The injector drain line can flow into the container with the diesel fuel. After the engine is started and is running at idle, move the fuel inlet line to the container with the preservative oil. Operate the engine five to ten minutes on the preservative oil. Stop the engine and reconnect the fuel lines to the supply tank.
6. The fuel tank must be drained and the drain plug installed. Make a cover for the filler vent with tape.
7. Drain all the pumps, compressors, coolers, filters and the crankcase. Replace all the plugs after draining.
8. Remove the intake and exhaust manifolds. Apply the preservative oil in a spray into the intake and exhaust parts of the engine. Also apply it into the intake part of the air compressor. Install the intake and exhaust manifolds.
9. Inspect the coolant in the cooling system. If the coolant contains rust, drain and flush the system. Then fill it with a rust preventing compound. Drain the system while it is hot and then replace the plug. Use an oil which has rust inhibitors that will mix with the water. Flush the cooling system before returning it to service.
10. If an air starter is used, remove the exhaust plate from the top of the starting motor. Protect the air starter with a spray of preservative oil into the exhaust part. Install the exhaust plate. Loosen the tension on the V-belt.
11. Make sure all outside surfaces of the engine are painted.
12. Remove the valve covers and apply preservative oil to the rocker levers, valve stems, springs, guides, crossheads and push tubes. Install the covers.
13. All engine openings must have a cover of heavy paper and tape.
14. Put a tag on the engine to show the following:
    a. The engine has been prepared for storage.
    b. The coolant has been removed.
    c. The crankshaft must not be rotated.
    d. The date the engine was prepared for storage.
    e. The compound used for storage must be removed before running the engine.
15. Put the engine in a place protected from the weather and where the air is dry and the temperature is even.

Note: After the engine has been in storage for 24 months, flush it with solvent and repeat the preparation for storage.

16. Keep all rust preventing compounds clean.

Preparing an Engine from Storage to Service

When an engine is removed from storage and put into service, the operations listed below must be completed. Inspections will be limited to operations indicated for the length of the storage time.

Clean the Engine

1. Remove all dirt from the outside of the engine.
2. Remove all the paper covers and tape.
3. Use solvent to remove rust preventing compound from the surfaces of the engine.
4. Fill the crankcase with clean oil.
5. Flush the cooling system.

Inspection

1. Engines in storage six months or less must have the adjustment of the injectors, valves and the belts checked. Also check the oil filters, air filters, connections and the torque of the cylinder head capscrews.
2. When an engine has been in storage for six months or more, the following inspection procedure must be followed:
    a. Flush the fuel system with fuel oil until the fuel system is clean.
    b. Remove the plug from the oil filter head and run hot, light mineral oil through the

Digitized by Google

oil passages. Rotate the engine three or four times during the flushing operation.

c. Remove all screens and make sure they are clean before the engine is started.

Precautions

1. Too much oil in the combustion chamber can cause a hydraulic lock. Damage to the engine will occur if it is started before the oil is removed.
2. When returning an engine to service from storage, make sure all foreign matter is removed from the screens and strainers.
3. Apply oil under pressure to the lubricating system before starting the engine.
4. The engine is now ready to start.

Caution: Always check with the nearest Cummins Distributor for the correct perservative oil for the engine.

Starting the Engine

After inspecting the engine and parts, make sure all the preservative oil has been flushed away. Start the engine as described in "Preparation for Starting," on page 14-44.

Digitized by Google

Digitized by Google

Group 16

This group includes the inspection of the flywheel, flywheel ring gear, removal and installation of the flywheel ring gear.

Mounting Adaptations

The Flywheel

The flywheel must be inspected for cracks or other damage any time that it is removed from the engine.

Inspection

1. Use the Part No. ST-1166 Magnetic Crack Detector to inspect the flywheel for cracks.
   a. Remove the keeper bar from the magnet poles.
   b. Put the magnet onto the area to be inspected.
   c. Spray the powder onto the area to be inspected. Use low pressure air to remove the excess powder. The powder will show the cracks as a white line.

Warning: Never use a flywheel that has cracks in the bolt circle (mounting) area.

2. Inspect the clutch face of the flywheel. Heat from operation of the clutch can cause small cracks or marks on the clutch face of the flywheel. You can use a machine to remove the cracks or marks.

Warning: Do not machine the flywheel unless the equipment in the shop can keep the factory standards for flywheel dimensions and static balance. The clutch face of the flywheel must not be machined to less than 0.625 inch [15.87 mm] thick. Do not machine the flywheel within a 4.0 inch [101.6 mm] radius of the center of the flywheel. The static balance of the flywheel must be 2 inch ounces [1440 g mm] or less.

The Flywheel Ring Gear

Inspection

Inspect the ring gear for broken or damaged teeth. Replace the ring gear if the teeth are broken or damaged.

Removal

Use a heating torch to heat the ring gear. Do not use a cutting torch. Use a blunt chisel and hit the chisel with a hammer to push the ring gear from the flywheel.

Replacement

1. Use an oven to heat the ring gear to 600°F [316°C].
   a. If an oven is not available, use a heating torch. Do not use a cutting torch. Apply the heat to the inside diameter of the ring gear. Use a 600°F [316°C] tempilstick crayon or an equivalent to find the temperature of the ring gear. Apply the crayon to the ring gear. When the temperature is correct, the chalk mark left by the crayon will become a liquid. Do not overheat the ring gear, this will change the hardness of the metal.
2. After the ring gear has been heated to the correct temperature, quickly install it onto the flywheel.

Warning: Always wear protective gloves when handling parts that have been heated.

Digitized by Google

Digitized by Google

Group 18

Worn limits as stated in this manual indicate that the part may be reused if it is at the worn limit. Discard only if it exceeds the worn limit. All engine models are the same unless otherwise stated. Limits are given in U.S. and metric measurements. All metric units are enclosed in brackets [ ].

Wear Limits, Specifications and Torque

Group 1: Cylinder Block Specifications — inch [mm]

		2 Inch Cam Engines			2-1/2 Inch Cam Engines *Specifications not listed are the same as 2 Inch Cam Engines*		
Ref. No.	Measurement	Worn Limit	New Minimum	New Maximum	Worn Limit	New Minimum	New Maximum
1.	**Camshaft Bushing** Inside Diameter	2.0015 [50.838]	1.999 [50.774]	2.0005 [50.813]	2.5023 [63.558]	2.4983 [63.457]	2.4998 [63.495]
	Camshaft Bushing Bore Inside Diameter	2.1305 [54.115]	2.1285 [54.064]	2.1295 [54.089]	2.6265 [66.721]	2.6245 [66.662]	2.6255 [66.688]
2.	**Cylinder Liner Counterbore** Inside Diameter		6.5615 [166.662]	6.5635 [166.713]			
	Depth	0.412 [10.46]	0.350 [8.89]	0.352 [8.94]			
3.	**Liner to Block Clearance** Lower Bore		0.002 [0.05]	0.006 [0.15]			
4.	**Lower Liner Bore** Inside Diameter		6.124 [155.55]	6.126 [155.60]			
5.	**Main Bearing Bore** Inside Diameter	4.7505 [120.663]	4.7485 [120.612]	4.750 [120.650]			
	Block (Ref. Fig. 1-37)						
	Height from Main Bearing Centerline	18.994 [482.45]	19.003 [482.68]	19.007 [482.78]			
	Height from Installed Alignment Bar	16.619 [422.12]	16.628 [422.35]	16.632 [422.45]			
	Cylinder Liner Inside Diameter	5.505 [139.83]	5.4995 [139.687]	5.501 [139.73]			
	Note: New cylinder liners dimensions at 60° to 70°F [16° to 21°C] may be 0.0002 to 0.0006 inch [0.005 to 0.0015 mm] smaller than indicated due to lubrite coating.						
	Protrusion (Installed)		0.003 [0.08]	0.006 [0.15]			
6.	**Crankshaft**						
	Connecting Rod Journal Outside Diameter	3.122 [79.30]	3.1235 [79.337]	3.125 [79.38]			

Digitized by Google

Group 1: Cylinder Block Specifications — Inch [mm] (Cont'd.)

		2 Inch Cam Engines			2-1/2 Inch Cam Engines *Specifications not listed are the same as 2 inch Cam Engines*		
Ref. No.	Measurement	Worn Limit	New Minimum	New Maximum	Worn Limit	New Minimum	New Maximum
	Main Bearing Journal Outside Diameter	4.4975 [114.237]	4.4985 [144.262]	4.500 [114.30]			
	Thrust Bearing Surface to Rear Counterweight	3.006 [76.35]	3.001 [76.23]	3.003 [76.28]			
	Main and Rod Journals Out-of-round T.I.R.*	0.002 [0.05]			*T.I.R. — Total Indicated Runout		
	Main and Rod Journal Taper (Length of Journal)	0.0005 [0.013]					
7.	**Main Bearings**** Shell Thickness	0.1215 [3.086]	0.123 [3.12]	0.1238 [3.145]	**Also available in 0.010, 0.020, 0.030 and 0.040 inch undersize.		
	Journal Clearance	0.007 [0.18]	0.0015 [0.038]	0.005 [0.13]			
8.	**Rod Bearings**** Shell Thickness	0.071 [1.80]	0.0724 [1.839]	0.0729 [1.852]	0.093 [2.362]	0.0942 [2.393]	0.0947 [2.405]
9.	**Crankshaft Thrust Ring** 157280 Std. Thickness	*	0.245 [6.22]	0.247 [6.27]			
	157281 0.010 O.S. Thickness [0.25]	*	0.255 [6.48]	0.257 [6.53]			
	157282 0.020 O.S. Thickness [0.51]	*	0.265 [6.73]	0.267 [6.78]			
	*Use Crankshaft End Clearance						
10.	**Crankshaft End Clearance** End Clearance (Installed)	0.022 [0.56]	0.007 [0.18]	0.017 [0.43]			
11.	**Connecting Rod**						
	Crankpin Bore Inside Diameter		3.2722 [83.114]	3.2732 [83.139]		3.3157 [84.218]	3.3167 [84.244]
	Center to Center Length		11.998 [304.75]	12.009 [304.80]			
	Piston Pin Bushing Inside Diameter	2.0022 [50.856]	2.0010 [50.825]	2.0015 [50.838]			
	Connecting Rod						
	Bend Without Bushing	0.010 [0.25]		0.010 [0.25]			
	Bend With Bushing	0.004 [0.10]		0.004 [0.10]			
	Twist Without Bushing	0.020 [0.51]		0.020 [0.51]			
	Twist With Bushing	0.010 [0.25]		0.010 [0.25]			
	Connecting Rod Bolt Minimum Outside Diameter	0.540 [13.72]	0.541 [13.74]	0.545 [13.84]			
	Pilot Outside Diameter	0.6242 [15.855]	0.6245 [15.862]	0.6250 [15.875]			

Digitized by Google

Group 1: Cylinder Block Specifications — inch [mm] (Cont'd.)

Ref. No.	Measurement	2 Inch Cam Engines Worn Limit	2 Inch Cam Engines New Minimum	2 Inch Cam Engines New Maximum	2-1/2 Inch Cam Engines *Specifications not listed are the same as 2 Inch Cam Engines* Worn Limit	New Minimum	New Maximum
	Connecting Rod Capscrew						
	Outside Diameter	0.583 [14.81]	0.584 [14.83]	0.590 [14.99]			
	Pilot Outside Diameter	0.637 [16.18]	0.638 [16.21]	0.643 [16.33]			
	Bolt Hole Pilot (2 Bolt Rods)						
	Rod	0.6249 [15.872]	0.6243 [15.857]	0.6248 [15.870]			
	Cap	0.6252 [15.880]	0.6246 [15.865]	0.6251 [15.878]			
	Dowel and Pilot (2 Capscrew Rod)						
	Dowel Diameter		0.3127 [7.943]				
	Rod Dowel Hole		0.3128 [7.945]	0.3133 [7.958]			
	Dowel Protrusion		0.220 [5.59]	0.250 [6.35]			
	Dowel Press Fit in Cap		0.0001 [0.003]	0.0006 [0.015]			
12.	**Piston**						
	Skirt Diameter at 70°F [21°C]	5.483 [139.27]	5.487 [139.37]	5.488 [139.40]			
	Piston Pin Bore Inside Diameter at 70°F [21°C]	2.0000 [50.800]	1.9985 [50.762]	1.9990 [50.775]			
13.	**Piston Pin**						
	Outside Diameter at 70°F [21°C]	1.9985 [50.762]	1.99875 [50.768]	1.9990 [50.775]			
14.	**Piston Ring**						
	Gap in Ring Travel Area of Liner						
	Part Number	**Minimum**	**Maximum**				
	147670	0.023 [0.58]	0.033 [0.84]				
	218025*	0.017 [0.43]	0.027 [0.68]				
	3012331**	0.017 [0.43]	0.027 [0.68]				
	132880***	0.019 [0.48]	0.029 [0.74]				
	214730	0.019 [0.48]	0.029 [0.74]				
	216383*	0.020 [0.51]	0.030 [0.76]				
	3012332	0.019 [0.48]	0.029 [0.74]				
	218732	0.010 [0.25]	0.025 [0.64]				

Add 0.003 inch [0.08 mm] ring gap to new maximum limit for each 0.001 inch [0.03 mm] wear in cylinder liner wall.

*NTC-475 only
**Big Cam II only
***NTE Engine only

Digitized by Google

Group 1: Cylinder Block Specifications — inch [mm] (Cont'd.)

Ref. No.	Measurement	2 inch Cam Engines Worn Limit	2 inch Cam Engines New Minimum	2 inch Cam Engines New Maximum	2-1/2 inch Cam Engines *Specifications not listed are the same as 2 inch Cam Engines* Worn Limit	New Minimum	New Maximum
15.	**Camshaft Journal** Outside Diameter	1.996 [50.70]	1.997 [50.72]	1.998 [50.75]	2.495 [63.37]	2.496 [63.40]	2.497 [63.42]
	Thrust Bearing Thickness	0.083 [2.11]	0.093 [2.36]	0.098 [2.49]			
	Support Bushing Inside Diameter	1.370 [34.80]	1.3725 [34.862]	1.3755 [34.938]			
	Outboard Bearing Support Inside Diameter	1.757 [44.63]	1.751 [44.48]	1.754 [44.55]			
16.	**Gear Case Cover Accessory Drive Bushing**						
	Part No. 132770 Std. Inside Diameter	1.571 [39.90]	1.565 [39.75]	1.569 [39.85]			
	132771 0.010 [0.25] U.S. Inside Diameter	1.561 [39.65]	1.555 [39.50]	1.559 [39.60]			
	132772 0.020 [0.51] U.S. Inside Diameter	1.551 [39.40]	1.545 [39.24]	1.549 [39.34]			
	20922 Std. (NTA Series) Inside Diameter	1.7565 [44.666]	1.7525 [44.513]	1.7565 [44.615]			

Torque Specifications — ft.-lbs. [N•m]

Ref. No.	Measurement	Minimum	Maximum
17.	**Pipe Plug Size**		
	1/8	15 [20]	20 [27]
	1/4	30 [41]	35 [47]
	3/8	35 [47]	45 [61]
	1/2	45 [61]	55 [75]
	3/4	60 [81]	70 [95]
	1-1/4	75 [102]	85 [115]
	1-1/2	90 [122]	100 [136]

Ref. No.	Measurement	¾ inch Minimum	¾ inch Maximum	1 inch Minimum	1 inch Maximum
18.	**Main Bearing Capscrews***				
	Step 1. Tighten to	80 [108.5]	90 [122]	100 [135.6]	110 [149]
	Step 2. Tighten to	160 [217]	170 [230]	200 [271]	210 [285]
	Step 3. Tighten to	250 [339]	260 [352]	300 [407]	310 [420]
	Step 4. Loosen Completely	All	All	All	All
	Step 5. Tighten to	80 [108.5]	90 [122]	100 [135.6]	110 [149]
	Step 6. Tighten to	160 [217]	170 [230]	200 [271]	210 [285]
	Step 7. Tighten to	250 [339]	260 [352]	300 [407]	310 [420]

Ref. No.	Measurement	Minimum	Maximum
19.	**Connecting Rod Nuts or Capscrews**		
	Step 1. Tighten to	70 [95]	75 [102]
	Step 2. Tighten to	140 [190]	150 [203]
	Step 3. Loosen Completely	All	All
	Step 4. Tighten to	25 [34]	30 [41]
	Step 5. Tighten to	70 [95]	75 [102]
	Step 6. Tighten to	140 [190]	150 [203]

*During 1978, some engines were built with special main bearing caps and ¾ inch capscrews. Check the serial number and build date of your engine against the list on the next page. If your engine is one of those listed, the main bearing capscrews must be tightened to 330 ft.-lbs. [447.4 N•m] maximum torque.

Digitized by Google

Engine Serial No.	Date Built	Engine Serial No.	Date Built	Engine Serial No.	Date Built	Engine Serial No.	Date Built
10718349 thru 10718373	2- 8-78	10719402	2-10-78	10721426 thru 10721429	2-17-78	10729428 thru 10729451	3-16-78
10718391 thru 10718394	2-8-78	10719405 thru 10719412	2-10-78	10721549 thru 10721563	2-17-78	10752302 thru 10752331	6-9-78
10718413 thru 10718420	2-8-78	10719682 thru 10719691	2-10-78	10721864 thru 10721867	2-20-78	10752414 thru 10752443	6-9-78
10718672 thru 10718674	2-8-78	10721117 thru 10721121	2-16-78	10721963 thru 10721972	2-20-78	10759241 thru 10759275	7-11-78
10718737 thru 10718746	2-8-78	10721127 thru 10721131	2-16-78	10722061 thru 10722070	2-20-78	10759566 thru 10759586	7-11-78
10719293 thru 10719309	2-10-78	10721161 thru 10721175	2-16-78	10722677 thru 10722701	2-22-78		
10719311 thru 10719319	2-10-78	10721420 thru 10721424	2-16-78	10729153 thru 10729177	3-16-78		

Group 2: Cylinder Head Specifications — Inch [mm]

Ref. No.	Measurement	Worn Limit	New Minimum	New Maximum
1.	**Cylinder Head**			
	Height	4.340 [110.24]	4.370 [111.00]	4.380 [111.25]
2.	**Valve, Stem**			
	Outside Diameter	0.449 [11.41]	0.450 [11.43]	0.451 [11.46]
	Face Angle		30 degree	30 degree
3.	**Valve Guide**			
	Inside Diameter	0.455 [11.56]	0.4525 [11.494]	0.4532 [11.511]
	Assembled Height		1.270 [32.26]	1.280 [32.51]
4.	**Valve Seat Insert***			
	Outside Diameter		2.0025 [50.864]	2.0035 [50.889]
	Cylinder Head			
	Inside Diameter		1.9995 [50.787]	2.0005 [50.813]
	Insert Height		0.278 [7.06]	0.282 [7.16]
	Run Out in 360 Degrees	0.002 [0.05]		
	Refaced Seat Width		0.063 [1.59]	0.125 [3.18]
5.	**Valve Spring****			
	Assembled Height			2.250 [57.15]
6.	**Crosshead Guide**			
	Outside Diameter	0.432 [10.97]	0.433 [11.00]	0.4335 [11.011]
	Assembled Height		1.880 [47.24]	1.880 [47.75]
	Crosshead Bore	0.440 [11.18]	0.434 [11.02]	0.436 [11.07]
7.	**Injector Sleeve**			
	Tip Protrusion		0.060 [1.52]	0.070 [1.78]

*See Ref. No. 8 for oversize valve seat inserts.
**See Ref. No. 9 for valve spring data.

Digitized by Google

Group 2: Cylinder Head Specifications — Inch [mm] (Cont'd.)

Ref. No.	Valve Seat Insert Part No.	Oversize Diameter	Oversize Depth	Insert O.D.	Cylinder Head I.D.	Insert Thickness
8.	127935	0.005 [0.13]	Std.	2.0075/2.0085 [50.991/51.016]	2.0045/2.0055 [50.914/50.940]	0.278/0.282 [7.06/7.16]
	127931	0.010 [0.25]	Std.	2.0125/2.0135 [51.118/51.143]	2.0095/2.0105 [51.041/51.067]	0.278/0.282 [7.06/7.16]
	127932	0.020 [0.50]	0.005 [0.13]	2.0225/2.0235 [51.372/51.397]	2.0195/2.0205 [51.295/51.321]	0.283/0.287 [7.19/7.29]
	127933	0.030 [0.76]	0.010 [0.25]	2.0325/2.0335 [51.626/51.651]	2.0295/2.0305 [51.549/51.575]	0.288/0.292 [7.32/7.42]
	127934	0.040 [1.02]	0.015 [0.38]	2.0425/2.0435 [51.880/51.905]	2.0395/2.0405 [51.803/51.829]	0.293/0.297 [7.44/7.54]

Be sure to measure the insert before machining the head or installing the insert.

Ref. No.	Valve Spring Part No.	Approximate Free Length Inch [mm]	No. Coils	Wire Diameter Inch [mm]	Length Inch [mm]	Required Load for Length: Lb. [N] Worn Limit	Lb. [N] New Minimum	Lb. [N] New Maximum
9.	178869	2.920 [74.17]	9.5	0.177 [4.50]	1.765 [44.83]	150 [667]	155 [689]	189 [841]
	211999	2.685 [68.20]	9	0.177 [4.50]	1.724 [43.79]	143 [636]	147.25 [655]	162.75 [724]

Cylinder Head Pipe Plug Torque — Ft.-Lbs. [N•m]

Ref. No.	Plug Size	Minimum	Maximum
10.	1/16 Inch	3 [4]	6 [8]
	1/8 Inch	5 [7]	10 [14]
	3/8 Inch	35 [47]	45 [61]
	1/2 Inch	60 [81]	70 [95]
	3/4 Inch	65 [88]	75 [102]
	1 Inch	135 [182]	145 [197]

Group 3: Rocker Lever Specifications — Inch [mm]

Ref. No.	Measurement	2 Inch Cam Engines: Worn Limit	New Minimum	New Maximum	2-1/2 Inch Cam Engines: Worn Limit	New Minimum	New Maximum
1.	**Bushings** Inside Diameter	1.1286 [28.664]	1.1245 [28.562]	1.1275 [28.639]	1.1286 [28.864]	1.1245 [28.562]	1.1275 [28.639]
2.	**Shaft** Outside Diameter	1.122 [28.50]	1.123 [28.52]	1.124 [28.55]	1.122 [28.50]	1.123 [28.52]	1.124 [28.55]

Digitized by Google

Group 4: Cam Follower Dimensions — Inch [mm]

	2 Inch Cam Engines			2-1/2 Inch Cam Engines		
Measurement	**Worn Limit**	**New Minimum**	**New Maximum**	**Worn Limit**	**New Minimum**	**New Maximum**
Shaft Outside Diameter	0.748 [19.00]	0.7485 [19.012]	0.749 [19.02]	0.748 [19.00]	0.7485 [19.012]	0.749 [19.02]
Bushing Inside Diameter	0.752 [19.10]	0.7501 [19.053]	0.7511 [19.078]	0.752 [19.10]	0.7501 [19.053]	0.7511 [19.078]
Injector Cam Roller						
Inside Diameter	0.505 [12.83]	0.503 [12.78]	0.504 [12.80]	0.705 [17.91]	0.703 [17.86]	0.704 [17.88]
Outside Diameter	1.2485 [31.71]	1.2490 [31.72]	1.251 [31.77]	1.2485 [31.71]	1.2495 [31.73]	1.2505 [31.76]
Valve Cam Rollers						
Inside Diameter	0.503 [12.78]	0.5005 [12.713]	0.5015 [12.738]	0.503 [12.78]	0.5005 [12.773]	0.5015 [12.708]
Outside Diameter	1.248 [31.71]	1.2490 [31.72]	1.2500 [31.75]	1.2485 [31.71]	1.2495 [31.73]	1.2505 [31.76]
Roller Pin Diameter						
Valve	0.497 [12.62]	0.4995 [12.687]	0.500 [12.70]	0.497 [12.62]	0.4997 [12.692]	0.500 [12.70]
Injector	0.497 [12.62]	0.4995 [12.687]	0.500 [12.70]	0.697 [17.70]	0.6997 [17.772]	0.7000 [17.780]
Diameter of the Bore for the Roller Pin						
Valve		0.4990 [12.674]	0.4997 [12.692]		0.4990 [12.674]	0.4995 [12.687]
Injector		0.4990 [12.674]	0.4997 [12.692]		0.6992 [17.759]	0.6997 [17.772]

Group 4: MVT Cam Follower Dimensions — Inch [mm]

Measurement	Worn Limit	New Minimum	New Maximum
Cam Follower Shaft Outside Diameter	0.748 [19.00]	0.7485 [19.01]	0.7490 [19.02]
Bushing Inside Diameter			
Valve	0.752 [19.10]	0.7501 [19.05]	0.7511 [19.07]
Injector		1.3765 [34.96]	1.3775 [34.98]
Injector Cam Roller			
Inside Diameter	0.705 [17.91]	0.703 [17.86]	0.704 [17.88]
Outside Diameter	1.2485 [31.71]	1.2495 [31.73]	1.2505 [31.76]
Valve Cam Roller			
Inside Diameter	0.503 [12.78]	0.5005 [12.71]	0.5015 [12.73]
Outside Diameter	1.2485 [31.71]	1.2495 [31.73]	1.2505 [31.76]
Roller Pin Outside Diameter			
Valve	0.497 [12.62]	0.4997 [12.692]	0.5000 [12.70]
Injector	0.697 [17.70]	0.6997 [17.772]	0.7000 [17.78]
Diameter Of The Bore For The Roller Pin			
Valve		0.4990 [12.67]	0.4995 [12.68]
Injector		0.6992 [17.76]	0.6997 [17.77]
Eccentric Outside Diameter		1.3743 [34.90]	1.3748 [34.92]

Digitized by Google

Group 4: Push Rod Length — inch [mm]

	2 Inch Cam	2-1/2 Inch Cam
Injector	18.290 [464.57] 18.320 [465.32]	17.775 [451.49] 17.805 [452.25]
Valve	18.360 [466.34] 18.390 [467.11]	17.880 [454.15] 17.910 [454.91]

Group 7: Lubricating Oil Pump Specifications — inch [mm]

Ref. No.	Measurement	Worn Limit	New Minimum	New Maximum
	Single Lubricating Oil Pump			
1.	**Bushings**			
	Inside diameter	0.6185 [15.710]	0.6165 [15.659]	0.6175 [15.684]
2.	**Idler and Drive Shaft**			
	Outside diameter	0.6145 [15.608]	0.615 [15.62]	0.6155 [15.634]
3.	**Drive Gear to Body**			
	Clearance	0.012 [0.30]		
4.	**Drive Shaft**			
	End Movement		0.002 [0.05]	0.005 [0.13]
	Idler shaft			
	Shaft Protrusion Inside Body		0.720 [18.29]	0.740 [18.80]
	Driven Gear/Drive Shaft			
	Shaft Protrusion		0.855 [21.72]	0.875 [22.22]
	Single (Double Capacity) Lubricating Oil Pump			
1.	**Bushings**			
	Inside Diameter	0.879 [22.33]	0.8767 [22.268]	0.8777 [22.293]
2.	**Idler and Drive Shaft**			
	Outside Diameter	0.874 [22.17]	0.8745 [22.212]	0.875 [22.22]
3.	**Drive Gear to Body**			
	Clearance	0.012 [0.30]		
4.	**Drive Shaft**			
	End Movement		0.002 [0.05]	0.008 [0.20]
	Idler Shaft			
	Shaft Protrusion Above body to Cover Face			0.955 [24.26]
	Driven Gear/Drive Shaft			
	Shaft Protrusion		1.035 [26.29]	1.055 [26.80]
5.	**Piston Cooling Oil Tube**			
	Protrusion Above Body Mounting Face		2.970 [75.44]	3.000 [76.20]
	Double Lubricating Oil Pump			
1.	**Bushings**			
	Inside Diameter	0.6185 [15.710]	0.6165 [15.659]	0.6175 [15.684]

Digitized by Google

Group 7: Lubricating Oil Pump Specifications — Inch [mm] (Cont'd.)

Ref. No.	Measurement	Worn Limit	New Minimum	New Maximum
2.	**Idler and Drive Shaft**			
	Outside Diameter	0.6145 [15.608]	0.615 [15.62]	0.6155 [15.634]
3.	**Drive Gear to Body**			
	Clearance	0.012 [0.30]		
4.	**Drive Shaft**			
	End Movement		0.004 [0.10]	0.007 [0.18]
	Idler Shaft			
	Shaft Protrusion Above Back Surface of Body		2.600 [66.04]	2.620 [66.55]
	Idler Shaft			
	Suffix Letter L		2.680 [68.07]	2.690 [68.33]
	Drive Gear/Drive Shaft			
	Shaft Protrusion		0.040 [1.02]	0.060 [1.52]
	Single Scavenger Pump			
1.	**Bushings**			
	Inside Diameter	0.6185 [15.710]	0.6165 [15.659]	0.6175 [15.684]
2.	**Idler and Drive Shaft**			
	Outside Diameter	0.6145 [15.608]	0.615 [15.62]	0.6155 [15.634]
	Idler Shaft			
	Protrusion	Flush with front surface of pump.		
	Driven Gear/Drive Shaft			
	Protrusion		0.580 [14.73]	.0610 [15.49]
	Coupling Dowels			
	Protrusion Above Coupling Face		0.990 [25.15]	1.010 [25.64]
	Coupling/Drive Shaft			
	Shaft Protrusion		0.050 [1.27]	0.070 [1.78]
4.	**Drive Shaft**			
	End Movement		0.004 [0.10]	0.010 [0.25]
	Double Scavenger Pump			
1.	**Bushings**			
	Inside Diameter	0.841 [21.36]	0.840 [21.34]	0.8405 [21.349]
2.	**Idler and Drive Shaft**			
	Outside Diameter	0.837 [21.26]	0.8375 [21.272]	0.838 [21.29]
	Idler Shaft			
	Protrusion	Flush with front surface of pump.		
	Driven Gear/Drive Shaft			
	Protrusion		0.580 [14.73]	0.610 [15.49]

Digitized by Google

Group 7: Lubricating Oil Pump Specifications — Inch [mm] (Cont'd.)

Ref. No.	Measurement	Worn Limit	New Minimum	New Maximum
	Coupling Dowels			
	Protrusion Above Coupling Face		0.990 [25.15]	1.010 [25.65]
	Coupling/Drive Shaft			
	Shaft Protrusion		0.050 [1.27]	0.070 [1.78]
4.	**Drive Shaft**			
	End Movement		0.004 [0.10]	0.007 [0.25]
	FFC Filter/Cooler or Non-FFC Lubricating Oil Pump Pressure Regulator Spring			
	Free Length			3.410 [86.36]
	Load at 2.125 inch [53.98 mm] lb. [N]		45 [200]	50 [222]
	Recommended Oil Pressure psi [kPa]		50 [345]	70 [483]
	FFC Lubricating Oil Pump By-Pass Valve Spring			
	Free Length			2.500 [63.50]
	Load at 1.780 inch [45.21 mm] lb. [N]		79 [351]	91 [405]
	Oil Pressure psi [kPa]			130 [896]
	DFC Lubricating Oil Pump Pressure Regulator Spring			
	Free Length			3.310 [84]
	Load at 1.820 inch [46.2 mm] lb. [N]		21.9 [97.4]	25.7 [114]
	Oil Pressure psi [kPa]			40 [275.7]
	DFC Lubricating Oil Pump Bypass Valve Spring			
	Free Length			2.224 [56.5]
	Load at 1.145 inch [29.07 mm] lb [N]		59.2 [263]	72.4 [322]
	Oil Pressure psi [kPa]			150 [1034]

Group 7: NTE Oil Pump Specifications — Inch [mm]

	Worn Limit	New Minimum	New Maximum
Bushing Inside Diameter	0.8785 [22.31]	0.8765 [22.26]	0.8775 [22.28]
Idler and Drive Shaft Outside Dia.	0.8740 [22.17]	0.8745 [22.21]	0.8750 [22.22]
Idler Shaft Protrusion		0.955 [24.25]	0.985 [25.02]
Drive Shaft Protrusion		2.305 [58.54]	2.325 [59.05]

Digitized by Google

Group 7: Oil Pan Capacity — U.S. Gallons [Litres] and Degrees of Angularity

		Capacity		Degrees of Angularity			
Part Number	Sump Location	High	Low	Front Up	Front Down	F.P. Side Down	Exhaust Side Down
10451	Center	6-1/2 [25]	4 [15]				
10474-2	Rear	7 [26]	5-1/2 [21]	19	21	35	35
10492-2	Rear	6-1/2 [25]	4 [15]	19	21	35	35
10668-1	Rear	8-1/2 [32]	5-1/2 [21]	16	16	16	16
10774	Rear	7 [26]	5-1/2 [21]	19	20	30	25
10777	Front	7 [26]	5-1/2 [21]	40	40	45	35
10779	Rear	8-1/2 [32]	5-1/2 [21]	16	16	16	16
10809	Full	11 [42]	3 [11]				
10811	Center	7 [26]	5-1/2 [21]	32	40	37	35
10850	Rear	7 [26]	5-1/2 [21]	14	12	45	20
10850-A	Rear	7 [26]	5-1/2 [21]	14	12	45	20
11055	Front	7 [26]	5-1/2 [21]				
11102	Front	7 [26]	5-1/2 [21]				
11150	Dry						
11194	Dry						
103949	Front	7 [26]	5-1/2 [21]	15	35	35	35
110626	Rear	7 [26]	5-1/2 [21]	40	25	45	19
116916	Rear	7 [26]	5-1/2 [21]	20	15	37	35
118784	Rear	7 [26]	5-1/2 [21]	14	12	45	20
119330	Center	7 [26]	5-1/2 [21]	45	45	45	45
119382	Full	7 [26]	5-1/2 [21]	42	1	19	40
119586	Front	7 [26]	5-1/2 [21]				
120905	Center	7 [26]	5-1/2 [21]				
121089	Front	6 [23]	4-3/4 [18]	15	30	30	30
121244	Front	6 [23]	4 [15]	36	45	45	40
121862	Center	6-1/2 [25]	4-1/2 (17]	22	24	40	40
121377	Rear	6 [23]	4 [15]	45	38	42	40
125318	Rear	6-1/2 [25]	4 [15]	28	15	38	36
126818	Rear	7 [26]	5-1/2 [21]	40	25	45	19
129434	Rear	6 [23]	4 [15]	45	38	42	40
133879	Rear	7 [26]	5-1/2 [21]	36	11	32	30
134070	Center	6 [23]	4 [15]	35	33	35	35
134271	Front	7 [26]	5-1/2 [21]	10	35	40	40
134279	Rear	7 [26]	5-1/2 [21]	19	21	35	35
134283	Rear	7 [26]	5-1/2 [21]	19	20	30	25
137156	Full	7 [26]	4 [15]	45	8	42	40
139493	Front	6 [23]	4 [15]	36	45	45	40
139745	Rear	6 [23]	4 [15]	45	38	42	40
146866	Dry						
148160	Rear	6 [23]	4 [15]	45	39	40	42
151079	Rear	6 [23]	4 [15]				
152410	Rear	6 [23]	4-1/2 [17]	27	15	25	35
153729	Rear	7 [26]	5-1/2 [21]	19	12	25	25
154418	Full	6 [23]	4 [15]	15	15	15	15
161206	Front	6 [23]	4 [15]	36	45	45	40
162377	Rear	7 [26]	5-1/2 [21]	45	38	42	40
164436	Front	6 [23]	4 [15]	40	40	45	35
164776	Rear	7 [26]	5-1/2 [21]	40	25	45	19
167186	Rear	7 [26]	5-1/2 [21]	19	12	25	25
167429	Rear	7 [26]	5-1/2 [21]	40	25	45	19
169348	Front	6 [23]	4 [15]	40	40	45	35
177155	Rear	6 [23]	4 [15]	45	39	40	42
181768	Rear	7 [26]	5-1/2 [21]	20	15	37	35
187756	Center	6-1/2 [25]	4 [15]	24	24	32	30

Digitized by Google

Group 7: Oil Pan Capacity — U.S. Gallons [Litres] and Degrees of Angularity (Cont'd.)

		Capacity		Degrees of Angularity			
Part Number	Sump Location	High	Low	Front Up	Front Down	F.P. Side Down	Exhaust Side Down
189672	Full	12 [45]	3-1/2 [13]				
193625	Rear	7 [26]	5-1/2 [21]	16	12	35	39
193629	Rear	7 [26]	5-1/2 [21]	16	12	35	39
193631	Rear	7 [26]	5-1/2 [21]	16	12	35	39
193634	Rear	7 [26]	5-1/2 [21]	16	12	35	39
193635	Rear	7 [26]	5-1/2 [21]	16	12	35	39
193636	Rear	7 [26]	5-1/2 [21]	16	12	35	39
193637	Rear	7 [26]	5-1/2 [21]	16	12	35	39
193638	Rear	7 [26]	5-1/2 [21]	16	12	35	39
193639	Rear	7 [26]	5-1/2 [21]	16	12	35	39
200787	Rear	7 [26]	5-1/2 [21]	16	12	35	39
201836	Rear	5 [19]	3-1/2 [13]	27	15	25	35
201837	Rear	5 [19]	3-1/2 [13]	27	15	25	35
201839	Rear	7 [21]	5-1/2 [21]	16	12	35	39
201841	Rear	5 [19]	3-1/2 [13]	27	15	25	35
201842	Rear	7 [26]	5-1/2 [21]	16	12	35	39
201843	Rear	7 [26]	5-1/2 [21]	16	12	35	39
201844	Rear	5 [19]	3-1/2 [13]	27	15	25	35
202283	Front	7 [26]	5-1/2 [21]	10	35	40	40
202284	Front	7 [26]	5-1/2 [21]	10	35	40	40
203561	Rear	7 [26]	5-1/2 [21]	19	12	25	25
203563	Rear	7 [26]	5-1/2 [21]	19	12	25	25
203564	Rear	7 [26]	5-1/2 [21]	19	12	25	25
203841	Front	7 [26]	5-1/2 [21]	10	35	40	40
3002151	Center	6-1/2 [25]	5-1/2 [21]	24	24	32	30
3002152	Center	7 [26]	5-1/2 [21]				
3005178	Rear	7 [26]	5-1/2 [21]	19	12	25	25
3005179	Rear	7 [26]	5-1/2 [21]	19	12	25	25
3005181	Rear	7 [26]	5-1/2 [21]	19	12	25	25
3005183	Rear	7 [26]	5-1/2 [21]	19	12	25	25

Group 7: Hose Size

Location	Minimum Hose Size
Turbocharger Oil Supply	No. 6
Full Flow Filter	No. 16
Turbocharger Oil Drain	No. 16

Group 7: Hose Bends — Inch [mm] (Teflon-Lined)

Hose Size	Inside Diameter	Outside Diameter	Minimum Bend Radius
6	5/16 [7.94]	39/64 [15.48]	4 [101.60]
16	7/8 [22.23]	1-13/64 [30.56]	7-3/8 [187.33]

Group 7: Hose Bends — Inch [mm] (Rubber-Lined)

Hose Size	Inside Diameter	Outside Diameter	Minimum Bend Radius
4	3/16 [4.76]	31/64 [12.30]	2 [50.80]
5	1/4 [6.35]	35/64 [13.89]	2-1/4 [57.15]
6	5/16 [7.94]	39/64 [15.48]	2-3/4 [69.85]
8	13/32 [10.32]	47/64 [18.65]	4-5/8 [117.48]
10	1/2 [12.70]	53/64 [21.03]	5-1/2 [139.70]
12	5/8 [15.87]	61/64 [24.21]	6-1/2 [165.10]
16	7/8 [22.23]	1-13/64 [30.56]	7-3/8 [187.34]
20	1-1/8 [28.58]	1-31/64 [37.70]	9 [228.60]
24	1-3/8 [34.93]	1-23/32 [43.66]	11 [279.40]

Digitized by Google

Group 8: Cooling System Specifications — Inch [mm]
Eccentric and FFC Water Pump

Ref. No.	Dimension Locations	New Minimum	New Maximum	Worn Limit
	Housing Bearing Bores	2.4408 [61.996]	2.4414 [62.012]	2.4494 [62.215]
	Housing Bore Carbon Face Seal	1.5000 [36.100]	1.5200 [38.608]	
1.	**Shaft Diameter** Impeller End	0.6262 [15.905]	0.6267 [15.918]	
2.	**Shaft Diameter** Seat Location	0.6262 [15.905]	0.6267 [15.918]	
3.	**Shaft Diameter** Inner Bearing	0.9843 [25.001]	0.9847 [25.011]	
4.	**Shaft Diameter** Outer Bearing	0.9843 [25.001]	0.9847 [25.011]	
5.	**Shaft Diameter** Pulley End	0.6693 [17.000]	0.6696 [17.008]	
6.	**Impeller Bore**	0.624 [15.85]	0.625 [15.88]	
	Impeller Vane to Body Clearance			
	(Cast Iron)	0.020 [0.51]	0.040 [1.02]	
	(Phenolic)	0.030 [0.76]	0.050 [1.27]	
	Pulley Bore Diameter	0.6663 [16.924]	0.6673 [16.949]	
	Minimum Press-Fit Between:			
	Shaft and Impeller	0.001 [0.03]		
	Shaft and Pulley	0.001 [0.03]		
	Housing Bore Outer Bearing	2.8345 [71.996]	2.8351 [72.012]	2.8431 [72.215]
	Housing Bore Inner Bearing	2.0471 [51.996]	2.0477 [52.012]	2.0557 [52.215]
	Housing Bore Carbon Face Seal	1.435 [36.45]	1.436 [36.47]	
	Housing Bore Outer Seal	2.9985 [76.162]	3.0015 [76.238]	
	Housing Bore Inner Seal	1.374 [34.90]	1.376 [34.95]	
1.	**Shaft Diameter** Impeller End	0.6262 [15.905]	0.6267 [15.918]	
2.	**Shaft Diameter** Seat Location	0.6262 [15.905]	0.6267 [15.918]	
3.	**Shaft Diameter** Inner Seal	0.872 [22.15]	0.878 [22.30]	

Digitized by Google

Group 8: Specifications — Inch [mm]
Eccentric and FFC Water Pump (Cont'd.)

Ref. No.	Dimension Locations	New Minimum	New Maximum	Worn Limit
4.	**Shaft Diameter** Inner Bearing Surface	0.9842 [24.999]	0.9846 [25.009]	
5.	**Shaft Diameter** Outer Bearing Surface	1.1810 [29.997]	1.1814 [30.008]	
6.	**Shaft Diameter** Pulley End	1.1810 [29.997]	1.1814 [30.008]	
7.	**Impeller Bore**	0.624 [15.85]	0.625 [15.88]	
	Impeller Vane to Body Clearance	0.020 [0.51]	0.040 [1.02]	
	Pulley Bore	1.1787 [29.939]	1.1798 [29.967]	
	Wear Sleeve O.D. Outer Seal Surface	2.2540 [57.252]	2.2560 [57.302]	
	Minimum Press-Fit Between:			
	Shaft and Impeller	0.001 [0.03]		
	Shaft and Pulley	0.001 [0.03]		

Group 9: Drive Unit Specifications — Inch [mm]

Ref. No.	Measurement	Worn Limit	New Minimum	New Maximum
1.	**Shaft**			
	Outside Diameter (Bushing Location)	1.310 [33.27]	1.3115 [33.312]	1.312 [33.32]
	Bushing			
	Inside Diameter	1.321 [33.55]	1.316 [33.43]	1.319 [33.50]
	Outside Diameter		1.449 [36.80]	1.450 [36.83]
	Out-of-Round	0.002 [0.05]		
	Press-Fit Between Housing and Bushing		0.002 [0.05]	0.0045 [0.11]
	Accessory Drive			
	End Clearance NH/NT		0.002 [0.05]	0.012 [0.26]
	End Clearance NTA		0.004 [0.10]	0.024 [0.61]
	Hydraulic Governor Drive			
	End Clearance		0.003 [0.08]	0.006 [0.15]

Digitized by Google

Group 14: Assembly Specifications — Inch [mm]

Ref. No.	Measurement	Worn Limit	New Minimum	New Maximum
1.	**Main Bearing**			
	Journal Clearance	0.007 [0.16]	0.0015 [0.038]	0.005 [0.13]
2.	**Connecting Rod Bearing**			
	Journal Clearance	0.007 [0.18]	0.0015 [0.038]	0.0045 [0.114]
3.	**Crankshaft**			
	End Clearance	0.022 [0.56]	0007 [0.18]	0.017 [0.43]
4.	**Cylinder Liner**			
	Protrusion		0.003 [0.08]	0.006 [0.15]
	Out-of-Round Top One (1) Inch			0.003 [0.08]
	Out-of-Round Packing Ring (Lower) Area			0.002 [0.05]
5.	**Connecting Rod**			
	Side Clearance		0.0045 [0.114]	0.013 [0.33]
6.	**Gear Train (Gear to Gear) Crankshaft, Camshaft, Accessory Drive and Lubricating Oil Pump**			
	Backlash	0.020 [0.51]	0.0045 [0.114]	0.0105 [0.267]
7.	**Camshaft (With Thrust Plate)**			
	End Clearance		0.001 [0.03]	0.005 [0.13]
	(With Outboard Bearing Support)			
	End Clearance		0.008 [0.20]	0.013 [0.33]
8.	**Injection Timing** *Refer to Table 6, Page 14-15.*			
9.	**Injector, Crosshead and Valve Adjustments** *Refer to Injector and Valve Adjustment, Page 14-32 through 14-36*			
10.	**Dynamometer Testing** *Refer to Text Procedure, Page 14-44*			
11.	**Lubricating Oil Pressure** *Refer to Page 14-48*			
12.	**Blow-By** *Refer to Test Procedure, Page 14-48*			

Group 14: Crankshaft Flange Capscrew Torque Specifications — ft.-lb. [N•m]

Engine Model	Part No.	Minimum	Maximum
NT Series	196653 Capscrew 196654 Retainer	250 [339]	270 [366]
NH Series	140410 Capscrew 140411 Retainer	180 [244]	200 [271]

Digitized by Google

Group 14: Vibration Damper Capscrew Torque Values

Capscrew Size	SAE Grade Number	Minimum ft.-lbs. [N•m]	Maximum ft.-lbs. [N•m]
1/2 inch	8	115 [156]	125 [170]
5/8 inch	8	180 [244]	200 [271]
5/8 inch	5	150 [203]	170 [231]

Group 14: Cam Follower Gasket Specifications

Gasket Part No.	Thickness Inch [mm]	Change in Push Rod Travel Inch [mm]	Application
3020001	0.006 to 0.008 [0.15 to 0.20]	0.0015 to 0.002 [0.04 to 0.05]	Big Cam
3020002	0.014 to 0.020 [0.36 to 0.51]	0.0035 to 0.005 [0.09 to 0.13]	Big Cam
3020003	0.020 to 0.024 [0.51 to 0.61]	0.005 to 0.006 [0.13 to 0.15]	Big Cam
3020004	0.027 to 0.033 [0.69 to 0.84]	0.007 to 0.008 [0.18 to 0.20]	Big Cam
9266-A*	0.006 to 0.008 [0.15 to 0.20]	0.0015 to 0.002 [0.04 to 0.05]	Small Cam
9266	0.014 to 0.020 [0.36 to 0.51]	0.035 to 0.005 [0.09 to 0.13]	Small Cam
3011272	0.020 to 0.024 [0.51 to 0.61]	0.005 to 0.006 [0.13 to 0.15]	Small Cam
120819	0.027 to 0.033 [0.69 to 0.84]	0.007 to 0.008 [0.18 to 0.20]	Small Cam
3011273	0.037 to 0.041 [0.94 to 1.04]	0.009 to 0.010 [0.23 to 0.25]	Small Cam

*Must not be used alone.

Group 14: Timing Key Information

¾ Inch Key Part No.	1 Inch Key Part No.	Offset Inch [mm]	Timing Change	Equivalent Gasket Stack Thickness Change Inch [mm]
3021601	69550	None	None	None
3021595	200722	0.0060 [0.15]	Retard	0.012 [0.30]
3021593	200712	0.0075 [0.19]	Retard	0.015 [0.38]
3021592	200707	0.0115 [0.29]	Retard	0.023 [0.58]
3021594	200713	0.0185 [0.47]	Retard	0.037 [0.94]
3021596	200723	0.0255 [0.65]	Retard	0.051 [1.30]
3021598	208746	0.0310 [0.79]	Retard	0.062 [1.57]
3021597	202600	0.0390 [0.99]	Retard	0.078 [1.98]
3021600	3012307	0.0510 [1.30]	Retard	0.102 [2.59]
3021599	3012328	0.0115 [0.29]	Advance	0.023 [0.58]
3022352*	—	0.0185 [0.47]	Advance	—
3022353*	—	0.0310 [0.79]	Advance	—

*For Mechanical Variable Timing (MVT) Engines)

Group 14: Alternator/Generator Torque Values (To Adjusting Link)

Nominal Bolt Size Inch	Torque Ft.-Lb. [N•m]
5/16	15 to 19 [20 to 26]
7/16	25 to 30 [34 to 41]
1/2	50 to 55 [68 to 75]

Group 14: Alternator/Generator Torque Values (To Bracket)

Nominal Bolt Size Inch	Torque Ft.-Lb. [N•m]
3/8	29 to 31 [39 to 42]
7/16	63 to 65 [85 to 88]
1/2	77 to 80 [104 to 108]

Group 14: Alternator/Generator Torque Values (Pulley to Alternator or Generator)

Nominal Bolt Size Inch	Torque Ft.-Lb. [N•m]
1/2	50 to 60 [68 to 81]
5/8	55 to 65 [75 to 88]
3/4	90 to 100 [122 to 126]

Note: Exceptions to the above limits are:

Delco-Remy Alternators	Torque Ft.-Lb. [N•m]
10 DN 150 25 SI	70 to 80 [95 to 108]
CAV Alternators	
AC 5	40 to 42 [54 to 57]
AC 7	60 to 70 [81 to 95]
AC 90	60 to 70 [81 to 95]

Group 14: Injector and Valve Set Position

Bar in Direction	Pulley Position	Set Cylinder Injector	Set Cylinder Valve
Start	A or 1-6 VS	3	5
Adv. To	B or 2-5 VS	6	3
Adv. To	C or 3-4 VS	2	6
Adv. To	A or 1-6 VS	4	2
Adv. To	B or 2-5 VS	1	4
Adv. To	C or 3-4 VS	5	1

Group 14: Engine Firing Order

Right Hand: 1-5-3-6-2-4 Left Hand: 1-4-2-6-3-5

Digitized by Google

Group 14: Adjustment Limits Using Dial Indicator Method — Inch [mm]

Oil Temp.	Injector Plunger Travel	Valve Clearance Intake	Valve Clearance Exhaust
Aluminum Rocker Housing			
Cold	0.170 ± 0.001 [4.32 ± 0.03]	0.011 [0.28]	0.023 [0.58]
Hot	0.170 ± 0.001 [4.32 ± 0.03]	0.011 [0.28]	0.023 [0.58]
Cast Iron Rocker Housing			
Cold	0.175 ± 0.001 [4.45 ± 0.03]	0.013 [0.33]	0.025 [0.64]
Hot	0.170 ± 0.001 [4.32 ± 0.03]	0.011 [0.28]	0.023 [0.58]
NTE-855 (European Big Cam Only)			
	0.225 [5.72]	0.011 [0.28]	0.023 [0.58]
NT-855 (Australian Big Cam Only)			
	0.228 [5.79]	0.011 [0.28]	0.023 [0.58]

Group 14: Injector Adjustment (Torque Method)

Cold Set	Hot Set
Cast Iron Rocker Housing	
48 inch-lb. [5.4 N•m]	72 inch-lb. [8.1 N•m]
Aluminum Rocker Housing	
72 inch-lb. [8.1 N•m]	72 inch-lb. [8.1 N•m]

Group 14: Valve Clearance (Torque Method) — Inch [mm]

Intake Valves Cold Set	Intake Valves Hot Set	Exhaust Valves Cold Set	Exhaust Valves Hot Set
Aluminum Rocker Housing			
0.014 [0.36]	0.014 [0.36]	0.027 [0.69]	0.027 [0.69]
Cast Iron Rocker Housing			
0.016 [0.41]	0.014 [0.36]	0.029 [0.74]	0.027 [0.69]

Digitized by Google

Capscrew Markings and Torque Values

Current Usage	*Much Used*	*Much Used*	*Used at Times*	*Used at Times*
Minimum Tensile Strength — PSI [MPa]	To 1/2 — 69,000 [476] To 3/4 — 64,000 [421] To 1 — 55,000 [379]	To 3/4 — 120,000 [827] To 1 — 115,000 [793]	To 5/8 — 140,000 [965] To 3/4 — 133,000 [917]	150,000 [1 034]
Quality of Material	**Indeterminate**	**Minimum Commercial**	**Medium Commercial**	**Best Commercial**
SAE Grade Number	**1 or 2**	**5**	**6 or 7**	**6**
Capscrew Head Markings Manufacturer's marks may vary These are all SAE Grade 5 (3 line)		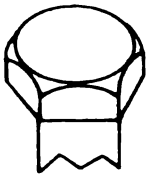		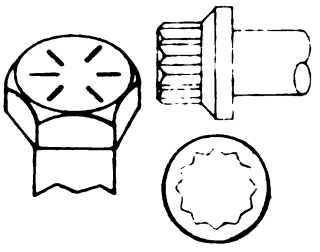

Capscrew Body Size (Inches) - (Thread)	Torque Ft.-Lbs. [N•m]	Torque Ft.-Lbs. [N•m]	Torque Ft.-Lbs. [N•m]	Torque Ft.-Lbs. [N•m]
1/4 — 20	5 [7]	8 [11]	10 [14]	12 [16]
— 28	6 [8]	10 [14]		14 [19]
5/16 — 18	11 [15]	17 [23]	19 [26]	24 [33]
— 24	13 [18]	19 [26]		27 [37]
3/8 — 16	18 [24]	31 [42]	34 [46]	44 [60]
— 24	20 [27]	35 [47]		49 [66]
7/16 — 14	28 [38]	49 [66]	55 [75]	70 [95]
— 20	30 [41]	55 [75]		78 [106]
1/2 — 13	39 [53]	75 [102]	85 [115]	105 [142]
— 20	41 [56]	85 [115]		120 [163]
9/16 — 12	51 [69]	110 [149]	120 [163]	155 [210]
— 18	55 [75]	120 [163]		170 [231]
5/8 — 11	83 [113]	150 [203]	167 [226]	210 [285]
— 18	95 [129]	170 [231]		240 [325]
3/4 — 10	105 [142]	270 [366]	280 [380]	375 [508]
— 16	115 [156]	295 [400]		420 [569]
7/8 — 9	160 [217]	395 [536]	440 [597]	605 [820]
— 14	175 [237]	435 [590]		675 [915]
1 — 8	235 [319]	590 [800]	660 [895]	910 [1234]
— 14	250 [339]	660 [895]		990 [1342]

Notes:
1. Always use the torque values listed above when specific torque values are not available.
2. Do not use above values in place of those specified in other sections of this manual; special attention should be observed when using SAE Grade 6, 7 and 8 capscrews.
3. The above is based on use of clean, dry threads.
4. Reduce torque by 10% when engine oil is used as a lubricant.
5. Reduce torque by 20% if new plated capscrews are used.
6. Capscrews threaded into aluminum may require reductions in torque of 30% or more of Grade 5 capscrews torque and must attain two capscrew diameters of thread engagement.

Caution: If replacement capscrews are of a higher grade than the original capscrew, tighten the replacement capscrew to the torque value used for the original capscrew.

Digitized by Google

Lubricating Oil

The Functions of Lubricating Oil

The lubricating oil used in a Cummins engine must be multifunctional. It must perform the primary functions of:

Lubrication by providing a film between the moving parts to reduce wear and friction.

Cooling by serving as a heat transfer media to carry heat away from critical areas.

Sealing by filling in the uneven surfaces in the cylinder wall, valve stems and turbocharger oil seals.

Cleaning by holding contaminants in suspension to prevent a build up of deposits on the engine surfaces.

In addition, it must also provide:

Dampening and cushioning of components that operate under high stress, such as gears and push tubes.

Protection from oxidation and corrosion.

Hydraulic Action for components such as Jacobs Brake and hydraulic controls.

Engine lubricating oil must be changed when it can no longer perform its functions within an engine. Oil does not wear out, but it becomes contaminated to the point that it can no longer satisfactorily protect the engine. Contamination of the oil is a normal result of engine operation. During engine operation a wide variety of contaminants are introduced into the oil. Some of these are:

Byproducts of Engine Combustion — asphaltenes, soot and acids from partially burned fuel.

Acids, varnish and sludge which are formed as a result of the oxidation of the oil as it breaks down or decomposes.

Dirt entering the engine through the combustion air, fuel, while adding or changing lubricating oil.

The oil must have an additive package to combat these contaminates. The package generally consists of:

Detergents/Dispersants which keep insoluble matter in suspension until they are filtered from the oil or are removed with the oil change. This prevents sludge and carbon deposits from forming in the engine.

Inhibitors to maintain the stability of the oil, prevent acids from attacking metal surfaces and prevent rust during the periods the engine is not operating.

Other Additives that enable the oil to lubricate highly loaded areas, prevent scuffing and seizing, control foaming and prevent air retention in the oil.

Oil Performance Classification System

The American Petroleum Institute (API), The American Society for Testing and Materials (ASTM) and the Society of Automotive Engineers (SAE) have jointly developed and maintained a system for classifying lubricating oil by performance categories. The following are brief descriptions of the API catagories used in the Cummins oil performance recommendations.

CC (Equivalent to MIL-L-2104B.) This category describes oils meeting the requirements of the military specification MIL-L-2104B. These oils provide low temperature protection from sludge and rust and are designed to perform moderately well at high temperature. For moderate-duty service.

CD (Equivalent to Series 3 and MIL-L-45199B.) This category describes oils meeting the requirements of the Series 3 specification and MIL-L-45199B. These oils provide protection from deposits and oxidation at high temperature. For severe-duty service.

SC (Equivalent to 1964 MS Oils.) This category describes oils meeting the 1964-1967 requirements of automobile manufacturers. Primarily for use in automotibles, it provides low temperature anti-sludge and anti-rust protection required in a ligh-duty diesel service such as a stop-and-go operation.

SD (Equivalent to 1968-1971 MS Oils.) This category describes oils meeting the 1964-1967 requirements of automobile manufacturers. Primarily for use in automobiles, it provides low temperature anti-sludge and anti-rust protection required in a light-duty diesel service such as a stop-and-go operation. It may be substituted for SC category.

SE (Equivalent to 1972 MS Oils.) This category describes oils meeting the 1972 requirements of automobile manufacturers. Primarily for use in automobiles, it provides protection from high temperature oxidation and low temperature anti-sludge

Digitized by Google

and anti-rust as required in a light-duty diesel service such as a stop-and-go operation. It may be substituted for SC category.

CB (No equivalent Specification.) These oils were usually referred to as Supplement 1 oils. This category describes oils which met the requirements of the military specification MIL-L-2104A where the diesel engine test was run using fuel with a high sulphur content. For moderate duty service. Oils in this performance category should not be used in Cummins Engines.

The Engine Manufacturers Association (EMA) publishes a book entitled "Lubricating Oils Data Book". Copies may be purchased from the Engine Manufacturers Association, 111 E. Wacker Drive, Chicago, IL 60601. This book lists commercially available oils by oil company and brand name with the API performance categories met by each brand.

Oil Performance Recommendations

Cummins Engine Co., Inc. does not recommend the use of any specific brand of engine lubricating oil. Cummins recommends the use of oil designed to meet the following API categories:

CC for use in naturally aspirated engines.

CC/CD for use in turbocharged engines.

CC/SC for use only in engines that operate in a light-duty service including standby and emergency operation.

Dual Categories are used where more protection is required than is provided by a single category. CC/CD and CC/SC categories indicate that the oil is blended to meet the performance level required by each single category.

A **sulfated ash limit** has been placed on lubricating oil for use in Cummins engines. Past experience has shown that oils with a high ash content may produce deposits on valves that can progress to guttering and valve burning. A maximum sulfated ash content of 1.85 mass % is recommended for all oil used in Cummins engines except engines fueled with natural gas. For natural gas engines a sulfated ash range of 0.03 to 0.85 mass % is recommended. Cummins Engine Co., Inc., does not recommend the use of ashless oils for natural gas engines. When the ash content is below .15 mass %, the ash should represent organo-metallic anti-wear additives.

Break-In Oils

Special "break-in" lubricating oils are not recommended for new or rebuilt Cummins engines. Use the same lubricating oils used in normal engine operation.

Viscosity Recommendations

The viscosity of an oil is a measure of its resistance to flow. The Society of Automotive Engineers has classified engine oils in viscosity grades; Table 1 shows the viscosity range for these grades. Oils that meet the low temperature (– 18 °C [0 °F]) requirement carry a grade designation with a "W" suffix. Oils that meet both the low and high temperature requirements are referred to as multigrade or multi-viscosity grade oils.

Multigraded oils are generally produced by adding viscosity index improver additives to retard the thinning effects a low viscosity base oil will experience at engine operating temperatures. Multigraded oils that meet the requirements of the API classifications, are recommended for use in Cummins engines.

Cummins recommends the use of multigraded lubricating oil with the viscosity grades shown in Table 2. Table 2 shows Cummins viscosity grade recommendations at various ambient temperatures. The only viscosity grades recommended are those shown in this table.

Cummins has found that the use of multigraded lubricating oil improves oil consumption control, improves engine cranking in cold conditions while maintaining lubrication at high operating temperatures and may contribute to improved fuel consumption. Cummins does not recommend single grade lubricating oils. In the event that the recommended multigrade oil is not available, single grade oils may be substituted.

Caution: When single grade oil is used be sure that the oil will be operating within the temperature ranges shown in Table 3.

The primary criterion for selecting an oil viscosity grade is the lowest temperature the oil will experience while in the engine oil sump. Bearing problems can be caused by the lack of lubrication during the cranking and start up of a cold engine when the oil being used is too viscous to flow properly. Change to a lower viscosity grade of oil as the temperature of the oil in the engine oil sump reaches the lower end of the ranges shown in Table 2.

Digitized by Google

Table 1: SAE Viscosity Numbers for Lubricating Oils

SAE Viscosity Grade	Viscosity Range: millipascal-second, mPa•s (centipoise, cP) @ −18°C (0°F) maximum	Viscosity Range: millimetre²/second, mm²/s (centistoke, cSt) @ 100°C (212°F) minimum	maximum
5W	1250	3.8	—
10W	2500	4.1	—
15W	5000	5.6	—
20W	10000	5.6	—
20	—	5.6	less than 9.3
30	—	9.3	less than 12.5
40	—	12.5	less than 16.3
50	—	16.3	less than 21.9

1. SAE Recommended Practice J300d
2. 1 mPa•s = 1 cP
3. 1 mm²/s = 1 cSt

Table 2: Cummins Recommendations for Viscosity Grade vs. Ambient Temperature

SAE Viscosity Grade*	Ambient Temperature**
Recommended	
10W-30	−25°C to 35°C [−13°F to 95°F]
15W-40 or 20W-40	−10°C & above [14°F & above]

*SAE-5W mineral oils should not be used

**For temperature consistently below −25°C [−13°F] See Table 4.

Exception to Table 2

For standby and emergency engine applications such as electric generators and fire pumps where the engine is located in a heated room or enclosure use an SAE 10W-30 oil. For unheated standby and emergency applications, consult your Cummins service representative for advice.

Table 3: Alternate Oil Grades

10W	−25°C to 0°C [−13°F to 32°F]
20W	−5°C to 20°C [−23°F to 68°F]
20W-20*	−5°C to 20°C [−23°F to 68°F]
20	−5°C to 20°C [−23°F to 68°F]
30	4°C and above [39°F and above]
40	10°C and above [50°F and above]

*20W-20 is not considered a multigrade even though it meets two grades.

Synthetic Lubricating Oil

Synthetic oils for use in diesel engines are primarily blended from synthesized hydrocarbons and esters. These base oils are manufactured by chemically reacting lower molecular weight materials to produce a lubricant that has planned predictable properties.

Synthetic oil was developed for use in an extreme environment where the ambient temperature may be as low as −45°C [−50°F] and extremely high engine temperatures at up to 205°C [400°F]. Under these extreme conditions petroleum base stock lubricants (mineral oil) do not perform satisfactorily.

Cummins Engine Co., Inc. recommends synthetic lubricating oil for use in Cummins engines operating in areas where the ambient temperature is consistently lower than −25°C [−13°F]. Synthetic lubricating oils may be used at higher ambient temperatures provided they meet the appropriate API Service categories and viscosity grades.

Cummins Engine Co., Inc. recommends the same oil change interval be followed for synthetic lubricating oil as that for petroleum based lubricating oil.

Arctic Operations

For engine operation in areas where the ambient temperature is consistently below −25°C [−13°F] and where there is no provision to keep the engine

Digitized by Google

warm when it is not operating, the lubricating oil should meet the requirements in the following table. Oil meeting these requirements usually have synthetic base stocks. SAE 5W viscosity grade synthetic oils may be used provided they meet the minimum viscosity requirement at 100°C [212°F].

Table 4: Arctic Oil Recommendations

Parameter (Test Method)	Specifications
Performance	API Classification CC/SC
Quality Level	API Classification CC/CD
Viscosity	10,000 mPa•s Max. at −35°C [31°F] 4.1 mm²/s Min. at 100°C [212°F]
Pour Point (ASTM D-97)	Min. of 5°C [9°F] Below the Lowest Expected Ambient Temperature
Sulfated Ash Content (ASTM D-874)	1.85% by Weight Maximum

Grease

Cummins Engine Company, Inc., recommends use of grease meeting the specifications of MIL-G-3545, excluding those of sodium or soda soap thickeners. Contact lubricant supplier for grease meeting these specifications.

TEST	TEST PROCEDURE
High-Temperature Performance	
Dropping point, °F	ASTM D 2265 350 min.
Bearing life, hours at 300°F 10,000 rpm	*FTM 331 600 min.
Low Temperature Properties	
Torque, GCM	ASTM D 1478
Start at 0°F	15,000 max.
Run at 0°F	5,000 max.
Rust Protection and Water Resistance	
Rust Test	ASTM D 1743 Pass
Water resistance, %	ASTM D 1264 20 max.
Stability	
Oil separation, % 30 Hours @ 212°F	*FTM 321 5 max.
Penetration	
Worked	ASTM D 217 250-300
Bomb Test, PSI Drop	ASTM D 942
100 Hours	10 max.
500 Hours	25 max.
Copper, Corrosion	*FTM 5309 Pass
Dirt Count, Particles/cc	*FTM 3005
25 Micron +	5,000 max.
75 Micron +	1,000 max.
125 Micron +	None
Rubber Swell	*FTM 3603 10 max.

*Federal Test Method Standard No. 791a.

Caution: Do not mix brands of grease. This can cause damage to the bearings. Excessive lubrication is as harmful as inadequate lubrication. After lubricating the fan hub, replace the pipe plugs. Use of fittings will allow lubricant to be thrown out, due to rotative speed.

Fuel Oil

Recommended Fuel Specification

Cummins recommends that fuel meeting the Grade No. 2-D requirements of the American Society for Testing and Materials (ASTM) D-975, Standard Specifications for Diesel Fuel Oils be used.

Cummins Diesel Engines have been developed to take advantage of the high energy content and generally lower cost of No. 2-D diesel fuels. Experience has shown that a Cummins Diesel Engine will also operate satisfactorily on fuels within the specification in Table 5.

Fuel Additives

In extreme situations, when available fuels are of poor quality or problems exist which are peculiar to certain operations, additives can be used; however, Cummins recommends consultation with the fuel supplier or Cummins Service Engineering Department prior to the use of fuel additives.

Digitized by Google

Table 5: Recommended Fuel Properties

Property	Recommended Specifications	General Description
Viscosity (ASTM D-445)	1.3 to 5.8 centistokes [1.3 to 5.8 mm per second] at 104°F [40°C]	The injection system works most effectively when the fuel has the proper "body" or viscosity. Fuels that meet the requirements of ASTM 1-D or 2-D diesel fuels are satisfactory with Cummins fuel systems.
Cetane Number (ASTM D-613)	40 Minimum. In cold weather or in service with prolonged low loads, a higher cetane number is desirable.	Cetane number is a measure of the starting and warm-up characteristrics of a fuel.
Sulfur Content (ASTM D-129 or 1552)	Not to exceed 1.0 mass percent	Diesel fuels contain varying amounts of various sulfur compounds. A practical method of neutralizing high sulfur fuels is to use lubricating oils which meet the API CD classification.
Active Sulfur (ASTM D-130)	Copper Strip Corrosion not to exceed No. 2 rating after three hours at 122°F [50°C].	Some sulfur compounds in fuel are actively corrosive. Fuels with a corrosion rating of three or higher after three hours at 122°F [50°C] can cause corrosion problems.
Water and Sediment (ASTM D-1796)	Not to exceed 0.1 volume percent	The amount of water and solid debris in the fuel is generally classified as water and sediment. It is good practice to filter fuel while it is being put into the fuel tank. More water vapor condenses in partially filled tanks due to tank breathing caused by temperature changes. Filter elements, fuel screens in the fuel pump and fuel inlet connections on injectors must be cleaned or replaced whenever they become dirty. These screens and filters, in performing their intended function, will become clogged when using a poor or dirty fuel and will need to be changed more often.
Carbon Residue (Ramsbottom, ASTM D-524 or Conradson, ASTM D-189	Not to exceed 0.25 mass percent on 10 volume percent residuum.	The tendency of a diesel fuel to form carbon deposits in an engine can be estimated by determining the Ramsbottom or Conradson carbon residue of the fuel after 90 percent of the fuel has been evaporated.
Flash Point (ASTM D-93)	At least 125°F [52°C] or legal temperature if higher than 125°F [52°C].	The flash point is the fuel temperature when enough volatile material evaporates so that a combustible mixture of fuel and air is formed above the fuel.
Density (ASTM D-287)	42° to 30° API gravity at 60°F [0.816 to 0.876 g/cc at 15°C].	Gravity is an indication of the high density energy content of the fuel. A fuel with a high density (low API gravity) contains more BTU's per gallon than a fuel with a low density (higher API gravity).
Cloud Point (ASTM D-97)	10°F [6°C] below lowest ambient temperature at which the fuel is expected to operate.	The cloud point of the fuel is the temperature at which crystals of paraffin was first appear. Crystals can be detected by a cloudiness of the fuel. These crystals will cause filters to plug.
Ash (ASTM D-482)	Not to exceed 0.02 mass percent.	The small amount of non-combustible metallic material found in almost all petroleum products is commonly called ash.
Distillation (ASTM D-86)	The distillation curve should be smooth and continuous.	At least 90 percent of the fuel should evaporate at less than 680°F [360°C]. All of the fuel should evaporate at less than 725°F [385°C].

Digitized by Google

Alternate Fuels

Note: Cummins Engine Company is not responsible and cannot warrant the emissions or performance of their engines when using other than the recommended fuels shown in Table 1.

During periods when the supply of No. 2-D diesel fuel is limited, alternate fuels, whose properties are within those defined in Table 6 can be used.

The following fuel specifications generally define alternate fuels within the prescribed limits:

Table 6: Alternate Fuels

1. ASTM D-975 (grades No. 1-D and No. 3-D diesel fuel).
2. ASTM D-396 (grades No. 2 fuel oil) — heating oil.
3. ASTM D-1655 (grades Jet A and Jet A-1 aviation turbine fuel) — commercial jet fuel.
4. ASTM D-2880 (grades No. 1 GT and No. 2 GT non-aviation gas turbine fuel).
5. ASTM D-3699 (grades No. 1-K and No. 2-K) — kerosine.
6. VV-F-800 (grades DFA, DF-1 and DF-2) — military diesel fuel.
7. VV-F-815 (grades FS-1 and FS-2) — military heating oil.
8. MIL-F-16884 (grade DFM) — military marine diesel fuel.
9. MIL-T-5626 (grade JP-5) — military jet fuel.
10. MIL-J-25656 (grade JP-6) — military jet fuel.
11. MIL-T-83133 (grade JP-8) — military jet fuel.
12. VV-K-211 (kerosine) — military kerosine.

Coolant

Water must be clean and free of any corrosive chemicals such as chloride, sulphates and acids. It must be kept slightly alkaline with a pH value in the range of 8.0 to 9.5. Any water which is suitable for drinking can be treated as described in the following paragraphs for use in an engine.

Maintain the Fleetguard DCA Water Filter on the engine. The filter by-passes a small amount of coolant from the system via a filtering and treating element which must be replaced periodically.

1. In summer, with no antifreeze, fill the system with water.
2. In winter select an antifreeze, except those with anti-leak compounds. Mix the antifreeze with water as required by temperature.
3. Install or replace DCA Water Filter Element as follows and as recommended in Cummins Engine Operation and Maintenance Manuals.

Caution: Although anti-leak antifreezes are chemically compatible with the DCA water treatment, the anti-leak compound can clog the coolant filters. Therefore "anti-leak" antifreeze can not be used in Cummins Engines.

Engines Equipped with DCA Water Filters

1. New engines shipped from the factory are equipped with water filters containing a "DCA precharge" element. See Table 7. This element is compatible with plain water or all permanent-type antifreeze except anti-leak antifreeze.

Note: The corrosion resistor cartridge part numbers listed in Table 7 are recommended for service replacement use on engines using the Chart Method to determine the "B" Maintenance Check. Refer to the Opeation and Maintenance Manual(s) for details on using the Chart Method for extending the "B" Maintenance Checks. Refer to Table 8 for liquid DCA part numbers and to the Parts Status Table or a listing of old and new part numbers.

In order to obtain the number of DCA units required to precharge the cooling system multiply the number of U.S. gallons by 1.0, the number of Imperial gallons by 1.2 (one unit of DCA will treat one gallon of coolant). Use a corrosion resistor cartridge (S) from Table 7 (which contains that chemical charge) or use the regular service cartridge and add enough DCA liquid to reach the required protective level. See Table 8.

2. At the first "B" Check (oil change period) the DCA pre-charge element must be changed to the DCA Service Element.
3. Replace the DCA Service Element at each succeeding "B" Check except under the following conditions.

Digitized by Google

Table 7: Corrosion Resistor Cartridges for Extended Maintenance Intervals — Miles [Kilometers]

Cooling System Capacity U.S. Gallons	Imperial Gallons	Liters	Corrosion Resistor Part No's. 10,000 - 14,000 [16,000 - 22,500]	DCA Units	Corrosion Resistor Part No's. 15,000 - 19,000 [24,000 - 30,500]	DCA Units	Corrosion Resistor Part No's. 20,000 - 25,000 [32,000 - 40,225]	DCA Units
0 - 10	0 - 8	0 - 38	3305366 (WF-2050)	2	3305366 (WF-2050)	2	3305367 (WF-2051)	4
11 - 20	9 - 17	42 - 76	3305367 (WF-2051)	4	3305367 (WF-2051)	4	3305368 (WF-2052)	6
21 - 30	17 - 25	79 - 114	3305367 (WF-2051)	4	3305368 (WF-2052)	6	3305369 (WF-2053)	8
31 - 50	26 - 42	117 - 189	3305369 (WF-2053)	8	3305370 (WF-2054)	15	3305371 (WF-2055)	23
			or		or		or	
			(2) 3305367 (WF-2051)	4 each	(2) 3305366 (WF-2052)	6 each	(2) 3305370 (WF-2054)	15 each
51 - 100	42 - 83	193 - 379	3305370 (WF-2054)	15	3305371 (WF-2055)	23	3305371 (WF-2055)	23
			or		or		or	
			(2) 3305368 (WF-2052)	6 each	(2) 3305370 (WF-2054)	15 each	(2) 3305370 (WF-2054)	15 each
			or		or		or	
			(4) 3305367 (WF-2051)	4 each	(4) 3305368 (WF-2052)	6 each	(4) 3305366 (WF-2052)	6 each
101 - 150	84 - 125	382 - 568	3305371 (WF-2055)	23	(2) 3305371 (WF-2055)	23 each	(2) 3305371 (WF-2055)	23 each
			or		or		or	
			(2) 3305370 (WF-2054)	15 each	(4) 3305370 (WF-2054)	15 each	(4) 3305370 (WF-2054)	15 each
			or					
			(4) 3305369 (WF-2053)	8 each				

a. If make-up coolant must be added between element changes, use coolant from a pretreated supply, as stated in "Make-up Coolant Specifications", in Group 2 of Operation and Maintenance Manual.

b. Each time the system is drained, go back to the pre-charge element.

4. To make sure of adequate protection, have the coolant checked at each third element change or more often.

Table 8: Liquid DCA Products

Part No.	DCA Units	Part Name
3305372 (DCA-30L)	4 (1 pint)	Liquid DCA
3305373 (DCA-35L)	16 (1/2 gallon)	Liquid DCA
3305374 (DCA-40L)	32 (1 gallon)	Liquid DCA
3305375 (DCA-45L)	160 (5 gallon)	Liquid DCA
3305377 (DCA-50L)	1760 (55 gallon)	Liquid DCA

Digitized by Google

Digitized by Google

Group 20

This group describes different types of engine brakes. These include compression brakes and exhaust brakes with air intake suppressors. The operation and installation of the Jacobs Engine Brake is also described.

Vehicle Braking

The Compression Brake (Jacobs Engine Brake)

The Method of Operation of the Compression Brake

When the compression brake is energized, it causes the engine to perform like a power absorbing air compressor. The brake opens the exhaust valves before the compression stroke is complete and combustion does not occur in the cylinder. The compressed air is released into the engine exhaust system and energy is not returned to the engine through the power stroke.

The following describes the process of opening the exhaust valves to release the compressed air from the cylinder. Refer to the diagram shown in Fig. 20-1 to help you to understand the process.

1. When you energize the solenoid valve, engine lubricating oil flows under pressure through the control valve. Then, the oil flows to both the master piston and the slave piston.

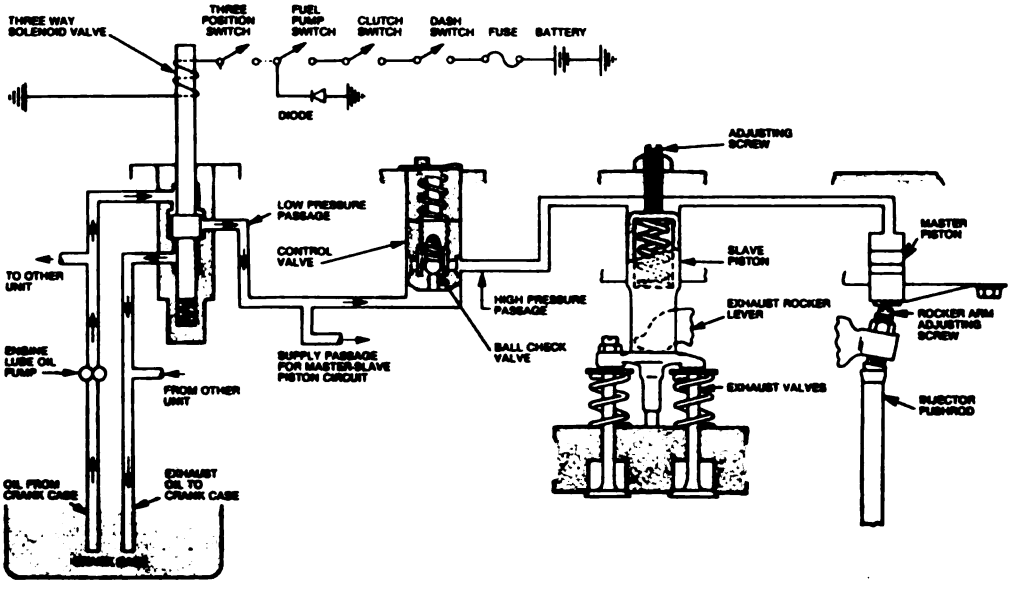

Fig. 20-1. Schematic Diagram Of The Compression Brake (Jacobs Engine Brake).

Digitized by Google

2. The oil pressure causes the master piston to move down against the adjusting screw of the injector rocker lever.

3. The push rod moves the adjusting screw end of the rocker lever up during the injection cycle. This causes the adjusting screw to push against the master piston. The movement of the master piston causes high oil pressure in the oil passage from the master piston to the slave piston. The ball check valve in the control valve holds the high pressure in the oil flow from the master piston to the slave piston.

4. The high pressure in the oil flow causes the slave piston to move down against the crosshead and opens the exhaust valves. The exhaust valves open as the piston moves to near the end of the compression stroke. The compression braking cycle is completed as the compressed air is released from the cylinder.

To Install the Compression Brake (Jacobs Engine Brake)

1. Remove the rocker lever housings if they had been previously installed.

2. Remove the adjusting screw and locknut from the exhaust valve crossheads. Remove the exhaust valve crossheads.

3. Install the adjusting screws and locknuts into the Jacobs Brake crossheads.

4. Install the Jacobs Brake crossheads onto the exhaust crosshead guides. The adjusting screw end of the crosshead must be toward the water manifold of the engine.

5. Adjust the crossheads. Follow the instructions on page 14-30 to adjust the crossheads.

6. Remove the rocker lever shaft setscrew from the rocker lever housings, Fig. 20-2.

7. Install the Jacobs Brake oil supply screw into the rocker lever housings. Tighten the screw so that the top of the screw is even with the boss in the housing.

8. Remove the adjusting screw and locknut from the injector rocker levers. Remove the locknut from the adjusting screw. Install the locknuts onto the Jacobs Brake adjusting screws.

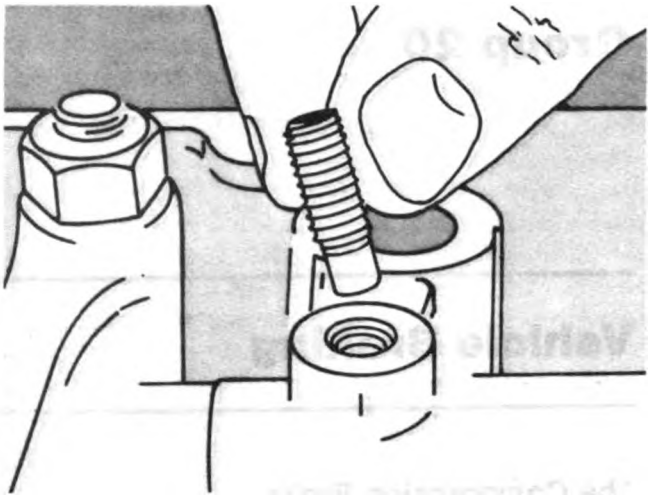

Fig. 20-2. Remove The Setscrew From The Rocker Lever Housing.

9. Install the Jacobs Brake adjusting screws into the injector rocker levers.

10. Install the rocker lever housings. Follow steps 1, 2 and 3 on page 14-31 to install the housings.

11. Install the Jacobs Brake steel washers into the mounting holes of the rocker lever housings, Fig. 20-3.

Caution: Do not use the Jacobs Brake washers if the engine has cast iron rocker lever housings.

12. Install the Jacobs Brake studs to fasten the rocker lever housings onto the engine. Make sure that you install the correct length studs into the correct location on the engine. If the engine is equipped with a fan bracket, install

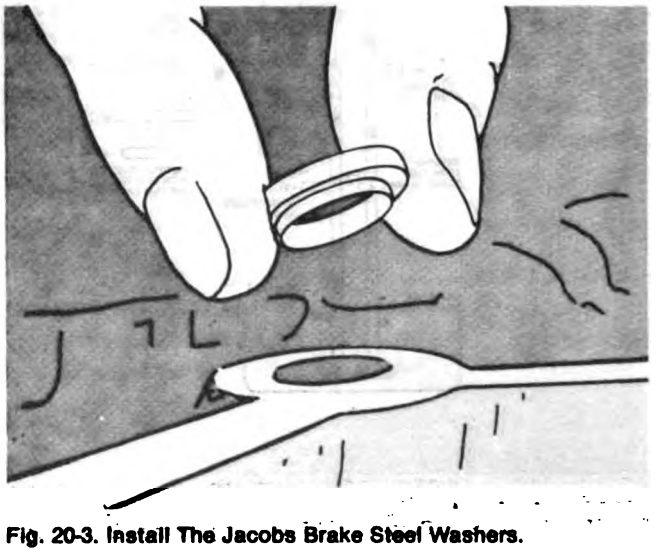

Fig. 20-3. Install The Jacobs Brake Steel Washers.

Digitized by Google

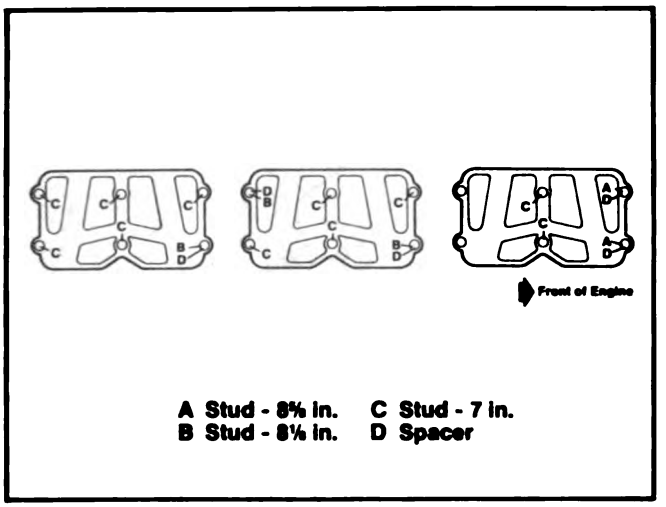

Fig. 20-4. Locations For The Stud And Spacer In The Rocker Lever Housings.

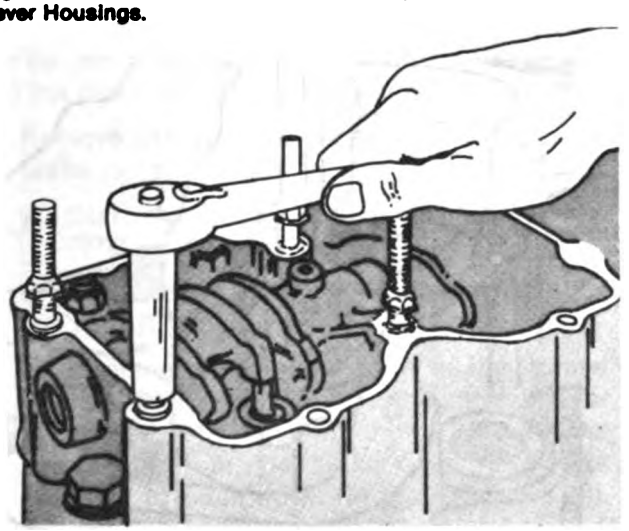

Fig. 20-5. Install The Jacobs Brake Studs Into The Rocker Lever Housings.

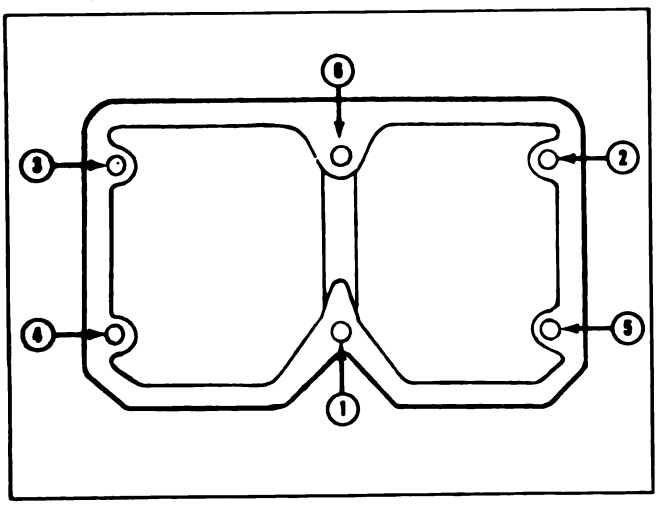

Fig. 20-6 (N11463). The Tightening Sequence For The Jacobs Brake Studs In The Rocker Lever Housings.

the longest studs into the rocker lever housing nearest to the front of the engine. See Fig. 20-4 to find the correct location for the studs.

13. Tighten the studs to 65 to 75 ft.-lbs. [88 to 102 N•m] torque. Tighten the studs in the sequence shown in Fig. 20-6.

14. Adjust the valves and injectors. Follow the instructions that begin on page 14-32 to adjust the valves and injectors.

15. Install the rubber seal into the hole in the bottom of the Jacobs Brake unit. The hole is located approximately in the center of the side that installs against the rocker lever housing, Fig. 20-7. Apply a light coat of clean grease or lubriplate onto the rubber seal to hold the seal into the hole.

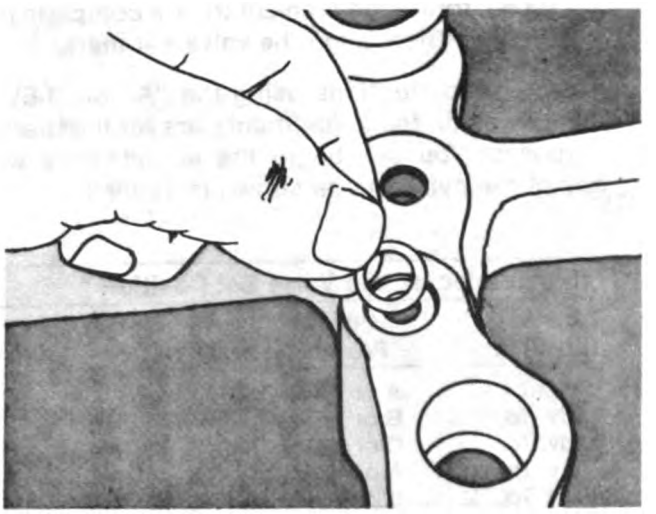

Fig. 20-7. Install The Rubber Seal Into The Jacobs Brake Unit.

16. Install the Jacobs Brake gaskets onto the rocker lever housings. The surfaces of the rocker lever housings must be clean and smooth when you install the gaskets.

17. Install the Jacobs Brake units onto the rocker lever housings. Install the spacers and nuts onto the studs. See Fig. 20-4 to find the correct locations for the spacers.

18. Tighten the nuts to 55 to 60 ft.-lbs. [75 to 81 N•m] torque. Tighten the nuts in the sequence shown in Fig. 20-6.

To Adjust the Slave Piston

The slave piston adjustment must be made with

Digitized by Google

the engine stopped and cold. Use the same procedure to adjust the slave piston that you used to adjust the valves. When the engine rotation is in the correct position to adjust the exhaust valve clearance it is also in the correct position to adjust the slave piston clearance. The exhaust valves for the cylinder to be adjusted must be in the closed position.

1. Rotate the crankshaft in the direction of engine rotation. Align the "A" or "1-6VS" mark on the accessory drive pulley with the pointer on the gear cover.

2. When the "A" or "1-6VS" mark is aligned, the intake and exhaust valves must be closed for cylinder number 5. The injector plunger for cylinder number 3 must be at the top of its travel. If the plunger is not at the top of its travel, rotate the crankshaft one complete revolution. Then, align the valve set mark.

Note: The instructions using the "A" or "1-6VS" mark to begin the adjustments are for illustration purposes. You can begin the adjustments with any of the cylinders as shown in Table 1.

Table 1: Injector and Valve Set Position

Bar in Direction	Pulley Position	Set Cylinder Injector	Set Cylinder Valve
Start	A or 1-6VS	3	5
Adv. To	B or 2-5VS	6	3
Adv. To	C or 3-4VS	2	6
Adv. To	A or 1-6VS	4	2
Adv. To	B or 2-5VS	1	4
Adv. To	C or 3-4VS	5	1

Note: Use an allen wrench to adjust the slave piston in the Jacobs Brake Model 25C and Model 44, Fig. 20-8. Use a screwdriver to adjust the slave piston in the Jacobs Brake Model 44A and Model 44B, Fig. 20-9. Use the same adjustment procedure and clearance for the Models 25C, 44, 44A and 44B.

3. Loosen the locknut for the adjusting screw. Loosen the adjusting screw until the piston is against the bottom of the bore in the engine brake housing.

4. Put a 0.018 inch [0.46 mm] feeler gauge between the slave piston and the crosshead. Tighten the adjusting screw until the slave piston touches the feeler gauge. The feeler gauge must have only a light amount of friction between the slave piston and the crosshead. Hold the adjusting screw in position and tighten the locknut to 15 to 18 ft.-lbs. [20.3 to 24.4 N•m] torque.

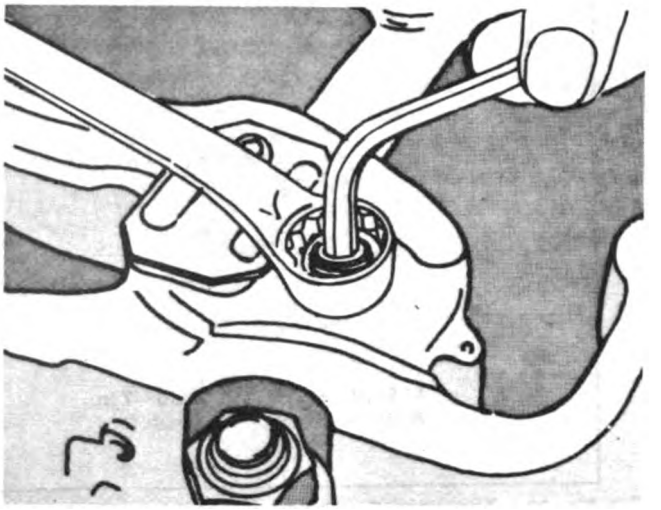

Fig. 20-8. Adjust The Slave Piston In The Models 25C And 44.

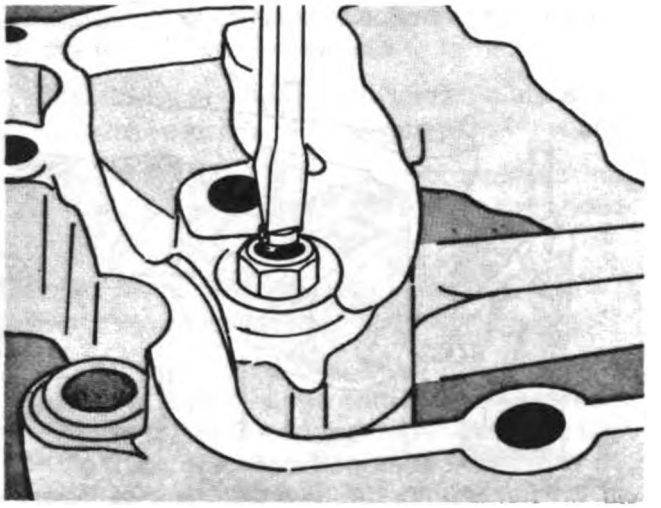

Fig. 20-9. Adjust The Slave Piston In The Models 44A And 44B.

5. Use the same procedure to adjust the remainder of the slave pistons.

6. Install the electrical wiring onto the solenoid in the Jacobs Brake units, Fig. 20-10. Connect the other end of the wiring to the inside terminal of the leadout assembly in the brake housing.

Note: Some applications use a 2-wire dual lead solenoid valve. Either solenoid electrical wiring

Digitized by Google

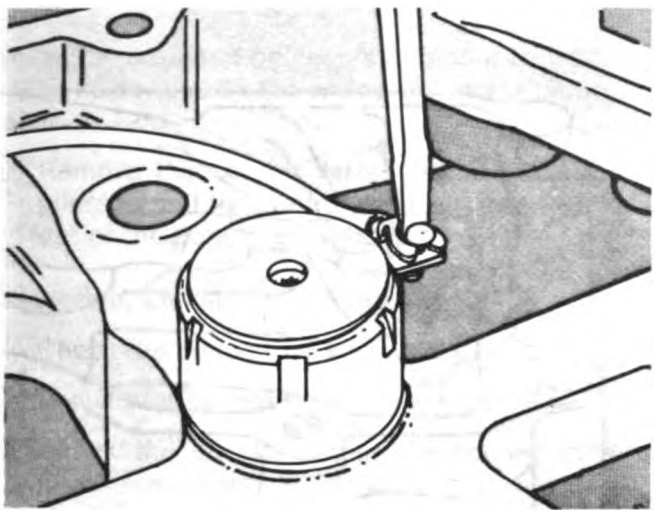

Fig. 20-10. Install The Electrical Wiring To The Solenoid Valve.

can be connected to the vehicle electrical system and the other wire to the ground system.

7. Remove the air from the oil passages in the brake units.
   a. Start the engine. Run the engine at idle RPM for 4 to 5 minutes.
   b. Increase the engine RPM to approximately 1800 RPM.
   c. Decrease the engine RPM to the normal idle RPM. Push down on the solenoid 5 or 6 times to let the engine oil fill the passages in the brake units. Use your hand to push down on the solenoid, Fig. 20-11.
   d. Stop the engine.

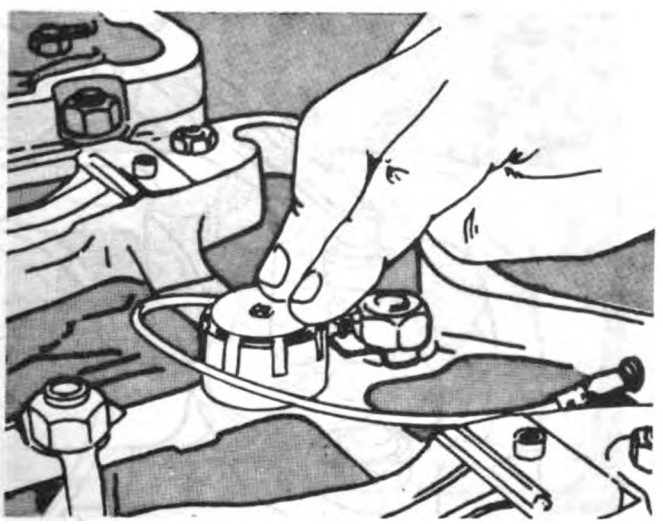

Fig. 20-11. Push On The Solenoid To Fill The Oil Passages.

Caution: When the engine is running and the rocker housing covers are removed, be sure to wear eye and face protection.

8. Install new rocker housing cover gaskets onto the Jacobs Brake units. Make sure that the surfaces for the gaskets are clean and free from any damage.
9. Install the rocker housing covers. Follow the instructons given on page 14-36 to tighten the capscrews.

Install the Clutch Switch

1. Install the clutch switch inside the vehicle cab. Use a location in the cab so that the actuating arm of the switch is against the clutch pedal arm, Fig. 20-12.

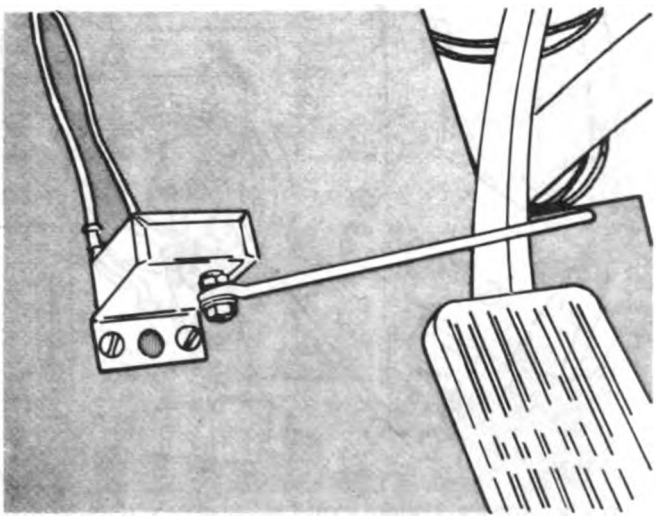

Fig. 20-12. The Clutch Switch Arm Against The Clutch Pedal Arm.

2. Adjust the clutch switch. The switch must be adjusted so that when the clutch pedal is pushed down (clutch disengaged) the switch will be in the open position. When the switch is in the open position it stops the electrical current to the solenoid in the brake unit.
   a. Put the actuating arm of the switch against the clutch pedal arm so that the free movement of the clutch pedal causes the switch to open. You can loosen the outer nut that holds the actuating arm to the switch so that you can move the arm to the correct position. If necessary, you can bend the arm so that it is in the correct position. Tighten the outer nut.

Digitized by Google

Install the Fuel Pump Switch

1. Install the fuel pump switch onto the fuel pump as shown in Fig. 20-13. Use two of the fuel pump housing capscrews to fasten the switch onto the fuel pump.
2. Install the actuating arm for the switch onto the fuel pump throttle shaft. Adjust the actuating arm so that it causes the switch to be in the closed position when the throttle shaft is at the idle position. The switch must be in the open position when the throttle shaft is not at idle. When the switch is in the open position it stops the electrical current to the solenoid in the brake unit. Tighten or loosen the adjusting screw to adjust the arm to the correct position.

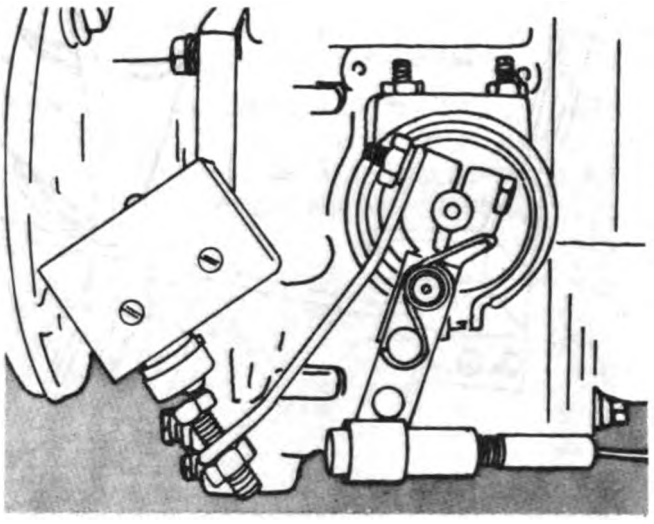

Fig. 20-13. The Fuel Pump Switch Installed Onto The Fuel Pump.

Caution: Make sure that the fuel pump throttle shaft moves freely from full throttle position to idle position after you have installed the switch.

Maintenance of the Engine Brake

The Control Valve

Disassembly

1. Remove the capscrew that fastens the cover plate to the housing, Fig. 20-14.

Warning: Remove the capscrew carefully. The cover plate holds the control valve springs in a compressed position.

2. Remove the control valve springs, Fig. 20-15.

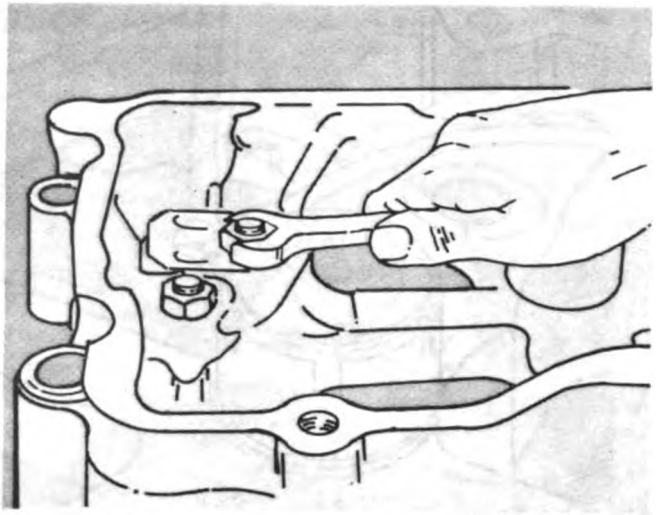

Fig. 20-14. Remove The Control Valve Cover Plate.

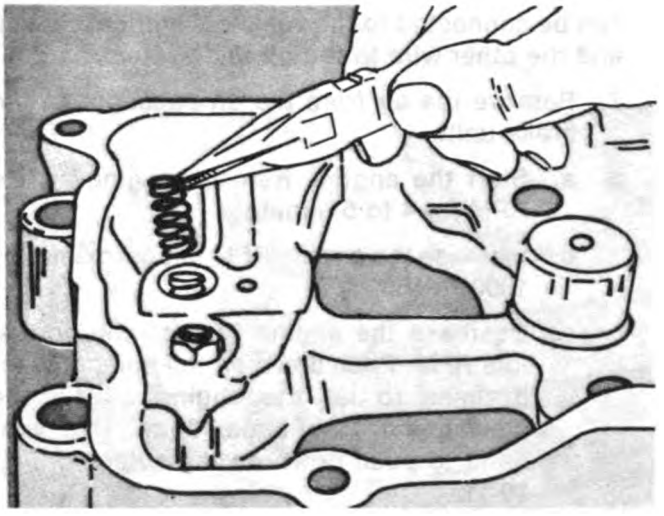

Fig. 20-15. Remove The Control Valve Springs.

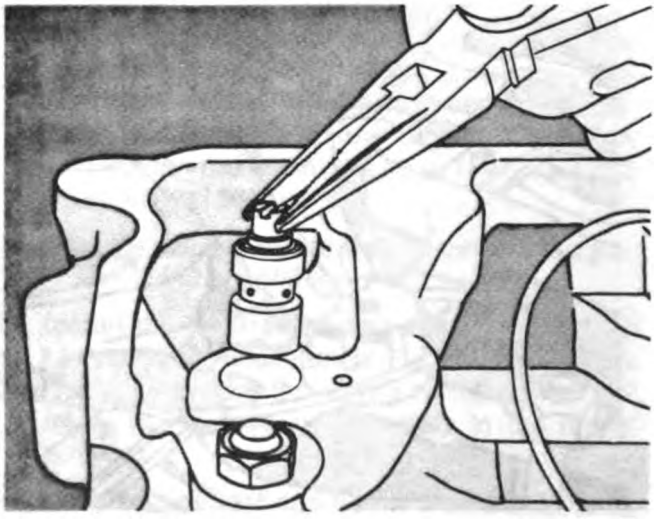

Fig. 20-16. Remove The Control Valve.

Digitized by Google

Note: The Jacobs Engine Brake Model Numbers 20, 25, 25A and 25B uses one spring for the control valve.

3. Remove the control valve. Use needle nose pliers to pull the control valve straight up and out of the bore, Fig. 20-16.

Inspection, Cleaning and Replacement

1. Check the springs for wear and damage.
2. Replace the springs if they are worn or damaged.
3. Check the control valve. The control valve must move freely in the bore. If it does not move freely, clean the valve and check it for damage. Replace the valve if it is damaged.

Assembly

1. Install the control valve into the bore.
2. Install the springs into the bore.
3. Install the cover plate.

The Solenoid Valve

Disassembly

1. Remove the electrical wiring from the solenoid valve.
2. Remove the solenoid valve. Use the solenoid wrench to loosen the solenoid valve, Fig. 20-17.

Fig. 20-17. Use The Solenoid Wrench To Loosen The Solenoid Valve.

Replacement

1. Remove the O-ring seals from the solenoid valve.
2. Apply a coat of oil onto the new O-ring seals.
3. Install the new O-ring seals onto the solenoid valve, Fig. 20-18. Make sure that the O-rings are correctly installed onto the solenoid valve.

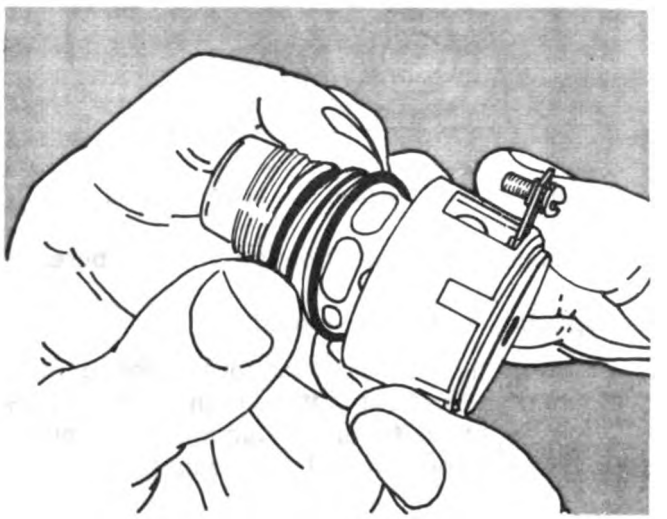

Fig. 20-18. Install The O-Ring Seals Onto The Solenoid Valve.

Assembly

1. Install the solenoid valve into the bore in the housing. Make sure that the O-rings do not move from their position on the solenoid valve.
2. Use the solenoid wrench to tighten the solenoid valve.
3. Install the electrical wiring onto the solenoid valve.

The Master Piston

Disassembly

1. Remove the capscrew and flat spring, Fig. 20-19. Take notice of the position of the flat spring before you remove it. The spring must be installed in the same position as when it was removed.

Note: Some models use a capscrew and washer to fasten the flat spring onto the housing. Some models use a spring retainer. The spring retainer must be installed in the same position as when it was removed.

Digitized by Google

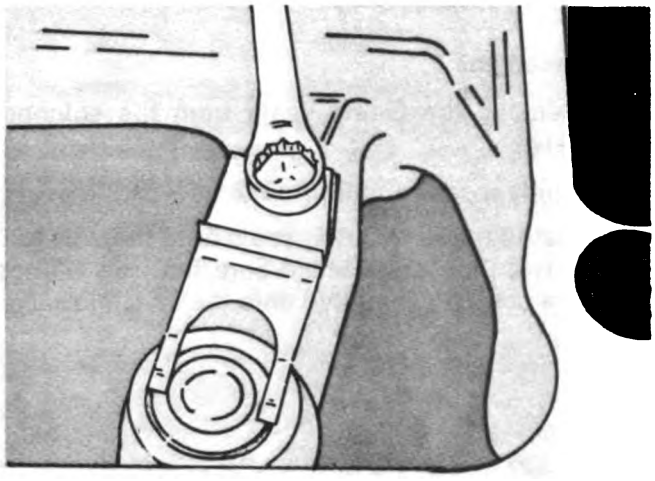

Fig. 20-19. Remove The Capscrew And Flat Spring.

2. Remove the master piston from the bore.

Inspection and Replacement

1. Check the master piston for freedom of movement in the bore. If the piston does not move freely, check for dirt or damage to the piston. Replace the piston if it is damaged.

Assembly

1. Install the master piston into the bore.
2. Install the flat spring, retainer or washer and capscrew. Make sure that the tabs of the spring do not touch the sides of the raised center part of the piston.

Caution: Do not try to adjust the master piston. The master piston has been adjusted at the factory. Any changes made to the master piston can cause damage to the engine.

The Slave Piston

Disassembly

Warning: The slave piston spring is under heavy compression. You must be very careful when you remove the spring. Follow the instructions and use the correct tools. Wear safety glasses.

1. Loosen the adjusting screw locknut.
2. Turn the engine brake unit over so that the side of the unit that installs against the rocker lever housing is up.
3. Push down against the spring retainer to remove the tension against the snap ring. Use an arbor press to push against the spring retainer. Remove the snap ring, Fig. 20-20. Slowly raise the arbor press until all of the tension is released from the slave piston spring.

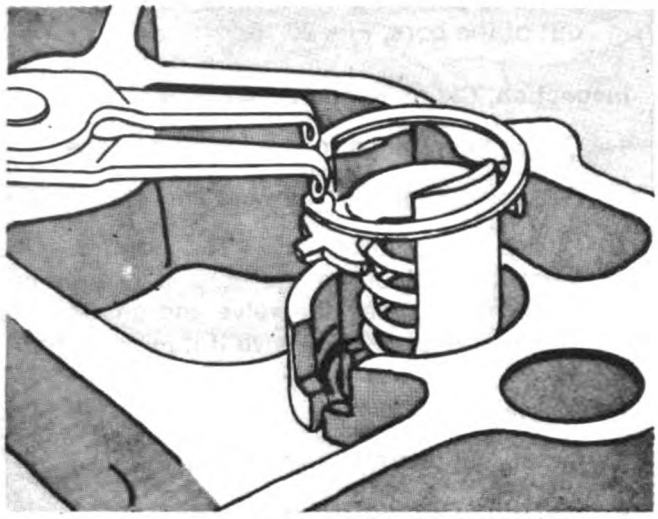

Fig. 20-20. Remove The Snap Ring From The Slave Piston.

4. Remove the spring retainer, spring and slave piston. Take notice of the position of the spring retainer. It must be installed in the same position as when removed.

Inspection and Replacement

1. Check the spring and spring retainer. Replace the parts if they are worn or damaged.
2. Check the slave piston for freedom of movement in the bore. If the piston does not move freely, check for dirt or damage. Replace the piston if it is damaged.

Assembly

1. Install the slave piston into the bore.
2. Install the spring and spring retainer.
3. Use an arbor press to push down on the retainer and spring so that you can install the snap ring. Install the snap ring.
4. Turn the brake unit over so that the side of the unit that install against the rocker lever housing is down. Install the adjusting screw and locknut.

Caution: The adjusting screws for the Jacobs Brake Models 44A and 44B contain an automatic

Digitized by Google

lash adjuster. Do not make any changes to these adjusting screws. Any changes can cause damage to the engine.

The Exhaust Brake

1. When an exhaust brake is installed, the engine can be used to reduce the speed of the vehicle and prevent wear on the mechanical brake system. The exhaust brake operates by controlling the flow of the exhaust gas from the exhaust manifold. On turbocharged engines, the exhaust flow is controlled after the exhaust flows through the turbocharger. This action applies more pressure against the engine piston, which reduces the rotation of the crankshaft and slows the vehicle.
2. The exhaust brake can generate carbon deposits in applications where braking is required for extended periods of time. Hydraulic or electric retarders can be used for these applications.
3. The following conditions are acceptable for the use of exhaust brakes:
   a. The maximum pressure in the exhaust system must never exceed 45 psi [310 kPa].
   b. Heavy duty valve springs, Part No. 178869, and valve guides, Part No. 170296, must be installed into the cylinder heads.
   c. The damper plate for the exhaust brake must be fully open when the engine is accelerating or pulling a full load.
   d. When the engine is at idle speed and the exhaust brake is in the closed position. The damper plate must be adjusted to permit a small amount of exhaust flow through the plate.
   e. For naturally aspirated engines, install an air intake suppressor into the air intake system to prevent dirt from going through the air cleaner and into the engine. The air cleaner can be used without a relief valve when the engine has an exhaust brake.
   f. The air intake suppressor can be used for turbocharged engines.
   g. The Cummins warranty does not include damage caused by the installation and use of the exhaust brake.
   h. Refer to the manufacturer's instructions for the installation, operation, adjustment and maintenance of the exhaust brake.
4. Before you install any new exhaust brake, write or call the Cummins Application Engineering Department for more details.

The Air Intake Suppressor

When the engine is equipped with an exhaust brake, pulsations can occur in the air intake system. This is caused by the combination of cylinder pressures and the intake valves opening during the braking period. The pulsations can damage the element and cause the dirt to move through the element and enter the engine.

The air intake suppressor can help to prevent this problem.

The air intake suppressor must be installed into the air intake system, between the engine and the air cleaner. Install the suppressor as close to the engine as possible. Use the following to help you to determine the need for a suppressor.

1. Air intake suppressors are required for naturally aspirated engines that use a dry element air cleaner.
2. Check the design of the air cleaner to find if an air intake suppressor is necessary.
3. Oil bath air cleaners must have a seal between the oil sump and the air cleaner body.

Note: Use the Part No. 147706 air intake suppressor with 4.0 inch [101.6 mm] diameter air intake tubing. Use the Part No. 147707 air intake suppressor with 5.5 inch [139.7 mm] diameter air intake tubing.

Digitized by Google

Digitized by Google

NTA 855L4 DIESEL ENGINE CUMMINS

SECTION II. MAINTENANCE ALLOCATION CHART

Appendix

(1) Group Number	(2) Component/Assembly	(3) Maintenance function	(4) Maintenance Level C	O	F	H	D	(5) Tools and equipment	(6) Remarks
01	Exhaust System								
	Manifold, Exhaust	Inspect		0.5					
		Replace			6.0				
		Repair			8.0				
02	Cooling, System								
	Hoses & Clamps	Inspect	0.2						
		Replace		2.0					
	Thermostat Engine	Inspect		0.5					
		Test		0.5					
		Replace		2.0					
	Heater, External Engine Block	Inspect		0.5					
		Replace		4.0					
		Repair			6.0				
	Water Manifold Assy	Inspect		0.5					
		Replace			6.0				
		Repair			12.0				
	Pump, Water	Inspect		0.2					
		Replace			4.0				
		Repair				8.0			
		Overhaul					10.0		
03	Fuel System Blower Assy	Inspect		0.2					
		Replace			10.0				
		Repair				12.0			
		Overhaul					16.0		
	Lines & Fittings	Inspect		0.2					
		Replace		2.0					
		Repair		4.0					
	Filter, Fuel	Inspect		0.1					
		Replace		0.3					
	Pump, Fuel Reciprocating	Inspect		0.5					
		Test			1.5				
		Replace			3.0				
	Pumps, Fuel Injection	Repair				10.0			
		Overhaul					16.0		

Digitized by Google

NTA 855L4 DIESEL ENGINE CUMMINS

SECTION II. MAINTENANCE ALLOCATION CHART

Appendix

(1) Group Number	(2) Component/Assembly	(3) Maintenance function	(4) Maintenance Level C	O	F	H	D	(5) Tools and equipment	(6) Remarks
	Injectors, Fuel	Inspect		0.5					
		Test			1.0				
		Adjust			2.0				
		Replace			4.0				
		Repair				8.0			
	Engine Assembly	Inspect		1.5					
		Test				8.0			
		Service	1.5						
		Replace			40.0				
		Repair		24.0					
		Overhaul					80.0		
	Filter, Oil	Inspect		0.2					
		Replace		0.5					
	Lube Oil Cooler	Inspect		0.2					
		Replace		4.0					
		Repair			8.0				
	Drive Mechanism Fuel Pump	Inspect		1.0					
		Replace			8.0				
		Repair				16.0			
	Pump, Oil	Inspect			2.0				
		Replace			5.0				
		Repair				10.0			
		Overhaul					12.0		
	Compression Release Mechanism	Inspect			2.0				
		Replace			8.0				
		Repair			8.0				
	Governor	Inspect			0.3				
		Test			2.0				
		Replace			2.0				
		Repair				10.0			
		Overhaul					16.0		
	Governor Drive	Inspect			2.0				
		Replace			4.0				
		Repair				8.0			
	Manifold, Intake	Inspect		0.5					
		Replace			4.0				
		Repair			6.0				

Digitized by Google

SECTION II. MAINTENANCE ALLOCATION CHART

Appendix

(1) Group Number	(2) Component/Assembly	(3) Maintenance function	(4) Maintenance Level C	O	F	H	D	(5) Tools and equipment	(6) Remarks
	After Cooler	Inspect		0.5					
		Replace			8.0				
		Repair				12.0			
	Fly Wheel & Damper	Inspect			1.0				
		Replace			2.0				
	Rocker Arms	Inspect		0.3					
		Replace			1.5				
		Repair				3.0			
	Cylinder Head Assy	Inspect		0.5					
		Replace			4.0				
		Repair				10.0			
		Overhaul					16.0		
	Valves, Intake & Exhaust	Inspect			1.0				
		Adjust			1.5				
		Replace				8.0			
		Repair				12.0			
	Springs, Valve	Inspect			1.0				
		Replace			2.0				
	Oil Pan	Inspect		1.0					
		Replace				16.0			
		Repair				24.0			
	Pistons & Connecting Rods	Inspect			2.0				
		Replace			12.0				
		Repair				20.0			
	Liners, Cylinder	Inspect			2.0				
		Replace			12.0				
		Repair				20.0			
	Camshaft & Bearings	Inspect			4.0				
		Replace				16.0			
	Crankshaft & Bearings	Inspect			2.5				
		Replace				40.0			
		Repair					80.0		
	Engine Block	Inspect		1.0					
		Test					8.0		
		Replace					40.0		
		Repair				24.0			
		Overhaul					80.0		

Digitized by Google

SECTION III. TOOL AND TEST EQUIPMENT REQUIREMENTS

REF. CODE	MAINT. CAT.	NOMENCLATURE	NATIONAL/NATO STOCK NUMBER	TOOL NUMBER

Digitized by Google

SECTION IV

MAINTENANCE ALLOCATION CHART	
REFERENCE CODE	REMARKS

SME Form 1568-3
1 Mar 73

Previous edition dated 1 May 68 is obsolete.

Digitized by Google

Digitized by Google

Index

Digitized by Google

Digitized by Google

Digitized by Google

Digitized by Google

Digitized by Google

Digitized by Google

By Order of the Secretary of the Army:

JOHN A. WICKHAM, JR.
General, United States Army
Chief of Staff

Official:

R. L. DILWORTH
Brigadier General, United States Army
The Adjutant General

DISTRIBUTION:
To be distributed in accordance with DA Form 12-25A, Operator, Organizational Direct and General Support Maintenance Requirements for Locomotive, Diesel-Elec, 0-4-4-0 Wheel, 80-T, 420/550 HP, Models NHBIS 600 & 112-5708 (Domestic Service) TM 55-2210-208 Series)

☆U.S. GOVERNMENT PRINTING OFFICE: 1991 - 281-486/42273

Digitized by Google

Digitized by Google

RECOMMENDED CHANGES TO EQUIPMENT TECHNICAL PUBLICATIONS

THEN. . JOT DOWN THE DOPE ABOUT IT ON THIS FORM, CAREFULLY TEAR IT OUT, FOLD IT AND DROP IT IN THE MAIL!

SOMETHING WRONG WITH THIS PUBLICATION?

FROM: (PRINT YOUR UNIT'S COMPLETE ADDRESS)

DATE SENT

PUBLICATION NUMBER	PUBLICATION DATE	PUBLICATION TITLE
TM 5-2815-233-14	25 Jul 86	ENGINE, DIESEL, NSN 2815-01-216-09[illegible]9

BE EXACT. . PIN-POINT WHERE IT IS

PAGE NO	PARA-GRAPH	FIGURE NO	TABLE NO

IN THIS SPACE TELL WHAT IS WRONG AND WHAT SHOULD BE DONE ABOUT IT:

PRINTED NAME, GRADE OR TITLE, AND TELEPHONE NUMBER

SIGN HERE:

DA FORM 1 JUL 79 2028-2

PREVIOUS EDITIONS ARE OBSOLETE.

DRSTS-M Overprint 2, 1 Nov 80.

P.S.--IF YOUR OUTFIT WANTS TO KNOW ABOUT YOUR RECOMMENDATION MAKE A CARBON COPY OF THIS AND GIVE IT TO YOUR HEADQUARTERS.

TEAR ALONG PERFORATED LINE

Digitized by Google

Digitized by Google

The Metric System and Equivalents

Linear Measure

1 centimeter = 10 millimeters = .39 inch
1 decimeter = 10 centimeters = 3.94 inches
1 meter = 10 decimeters = 39.37 inches
1 dekameter = 10 meters = 32.8 feet
1 hectometer = 10 dekameters = 328.08 feet
1 kilometer = 10 hectometers = 3,280.8 feet

Weights

1 centigram = 10 milligrams = .15 grain
1 decigram = 10 centigrams = 1.54 grains
1 gram = 10 decigram = .035 ounce
1 dekagram = 10 grams = .35 ounce
1 hectogram = 10 dekagrams = 3.52 ounces
1 kilogram = 10 hectograms = 2.2 pounds
1 quintal = 100 kilograms = 220.46 pounds
1 metric ton = 10 quintals = 1.1 short tons

Liquid Measure

1 centiliter = 10 milliters = .34 fl. ounce
1 deciliter = 10 centiliters = 3.38 fl. ounces
1 liter = 10 deciliters = 33.81 fl. ounces
1 dekaliter = 10 liters = 2.64 gallons
1 hectoliter = 10 dekaliters = 26.42 gallons
1 kiloliter = 10 hectoliters = 264.18 gallons

Square Measure

1 sq. centimeter = 100 sq. millimeters = .155 sq. inch
1 sq. decimeter = 100 sq. centimeters = 15.5 sq. inches
1 sq. meter (centare) = 100 sq. decimeters = 10.76 sq. feet
1 sq. dekameter (are) = 100 sq. meters = 1,076.4 sq. feet
1 sq. hectometer (hectare) = 100 sq. dekameters = 2.47 acres
1 sq. kilometer = 100 sq. hectometers = .386 sq. mile

Cubic Measure

1 cu. centimeter = 1000 cu. millimeters = .06 cu. inch
1 cu. decimeter = 1000 cu. centimeters = 61.02 cu. inches
1 cu. meter = 1000 cu. decimeters = 35.31 cu. feet

Approximate Conversion Factors

To change	*To*	*Multiply by*	*To change*	*To*	*Multiply by*
inches	centimeters	2.540	ounce-inches	newton-meters	.007062
feet	meters	.305	centimeters	inches	.394
yards	meters	.914	meters	feet	3.280
miles	kilometers	1.609	meters	yards	1.094
square inches	square centimeters	6.451	kilometers	miles	.621
square feet	square meters	.093	square centimeters	square inches	.155
square yards	square meters	.836	square meters	square feet	10.764
square miles	square kilometers	2.590	square meters	square yards	1.196
acres	square hectometers	.405	square kilometers	square miles	.386
cubic feet	cubic meters	.028	square hectometers	acres	2.471
cubic yards	cubic meters	.765	cubic meters	cubic feet	35.315
fluid ounces	milliliters	29,573	cubic meters	cubic yards	1.308
pints	liters	.473	milliliters	fluid ounces	.034
quarts	liters	.946	liters	pints	2.113
gallons	liters	3.785	liters	quarts	1.057
ounces	grams	28.349	liters	gallons	.264
pounds	kilograms	.454	grams	ounces	.035
short tons	metric tons	.907	kilograms	pounds	2.205
pound-feet	newton-meters	1.356	metric tons	short tons	1.102
pound-inches	newton-meters	.11296			

Temperature (Exact)

°F	Fahrenheit temperature	5/9 (after subtracting 32)	Celsius temperature	°C

Digitized by Google

Digitized by Google